ORANGE COUNTY FIRE AUTHORITY

AGENDA

BOARD OF DIRECTORS REGULAR MEETING
Thursday, November 17, 2016
6:00 P.M.

Regional Fire Operations and Training Center
Board Room
1 Fire Authority Road
Irvine, CA 92602

This Agenda contains a brief general description of each item to be considered. Except as otherwise provided by law, no action or discussion shall be taken on any item not appearing on the following Agenda. Unless legally privileged, all supporting documents, including staff reports, and any writings or documents provided to a majority of the Board of Directors after the posting of this agenda are available for review at the Orange County Fire Authority Regional Fire Operations & Training Center, 1 Fire Authority Road, Irvine, CA 92602 or you may contact Sherry A.F. Wentz, Clerk of the Authority, at (714) 573-6040 Monday through Thursday, and every other Friday from 8 a.m. to 5 p.m. and available online at **http://www.ocfa.org**

If you wish to speak before the Fire Authority Board, please complete a Speaker Form identifying which item(s) you wish to address. Please return the completed form to the Clerk of the Authority prior to being heard before the Board. Speaker Forms are available at the counters of both entryways of the Board Room.

In compliance with the Americans with Disabilities Act, if you need special assistance to participate in this meeting, you should contact the Clerk of the Authority at (714) 573-6040.

CALL TO ORDER

INVOCATION by OCFA Chaplain Brett Peterson

PLEDGE OF ALLEGIANCE by Director Sarmiento

ROLL CALL

PRESENTATIONS

1. Requests for Commendations and Proclamations
Submitted by: Sherry Wentz, Clerk of the Authority

A. Recognition of outgoing OCFA Directors.

Recommended Action:
Approve request as submitted and make presentations to those present.

REPORT FROM THE BUDGET AND FINANCE COMMITTEE CHAIR

REPORT FROM THE CLAIMS SETTLEMENT COMMITTEE CHAIR

REPORT FROM THE FIRE CHIEF

- Introduction of new Human Resources Director
- Election Impact Report (Wentz)
- Fire Captain's Testing Process
- EMS Call Processing Times (Schroeder)
- Smoke Alarm Installations (Cooney)
- Board Directive Status

PUBLIC COMMENTS

Resolution No. 97-024 established rules of decorum for public meetings held by the Orange County Fire Authority. Resolution No. 97-024 is available from the Clerk of the Authority.

Any member of the public may address the Board on items within the Board's subject matter jurisdiction but which are not listed on this agenda during PUBLIC COMMENTS. However, no action may be taken on matters that are not part of the posted agenda. We request comments made on the agenda be made at the time the item is considered and that comments be limited to three minutes per person. Please address your comments to the Board as a whole, and do not engage in dialogue with individual Board Members, Authority staff, or members of the audience.

The Agenda and Minutes are now available through the Internet at www.ocfa.org. You can access upcoming agendas on the Monday before the meeting. The minutes are the official record of the meeting and are scheduled for approval at the next regular Board of Directors meeting.

2. MINUTES

A. Minutes from the October 27, 2016, Regular Board of Directors Meeting
Submitted by: Sherry Wentz, Clerk of the Authority

Recommended Action:
Approve as submitted.

3. CONSENT CALENDAR

A. Annual Statement of Investment Policy and Investment Authorization

Submitted by: Lori Zeller, Assistant Chief/Business Services Department

Budget and Finance Committee Recommendation: *APPROVE*

Recommended Action:

1. Review and approve the submitted Investment Policy of the Orange County Fire Authority, to be effective January 1, 2017.
2. Pursuant to Government Code Sections 53601 and 53607, renew delegation of investment authority to the Treasurer for a one-year period, to be effective January 1, 2017.

END OF CONSENT CALENDAR

4. PUBLIC HEARING(S)

No items.

5. DISCUSSION CALENDAR

A. Approval of Memorandum of Understanding Orange County Fire Authority Managers' Association

Presented by: Lori Zeller, Assistant Chief/Business Services Department

Recommended Actions:

Approve the inaugural Memorandum of Understanding between the Orange County Fire Authority and the Orange County Fire Authority Managers' Association for the term of June 25, 2015, to June 24, 2018, and approve the associated amendments to the Personnel & Salary Resolution.

B. 2016 Long Term Liability Study & Expedited Pension Payment Plan

Presented by: Tricia Jakubiak, Treasurer/Business Services Department

Budget and Finance Committee Recommendation: *APPROVE*

Recommended Actions:

1. Direct staff to continue the Expedited Pension Payment Plan as indicated in the Updated Snowball Strategy, with a modification to alter the funding target from 100% to 85%, and redirect expedited payment dollars to Retiree Medical after achieving the 85% target.
2. Direct staff to return to the Board of Directors in January with the mid-year financial review, to consider allocation of the $9.8 million of available unencumbered funds identified in the FY 2015/16 financial audit to OCFA's unfunded pension liability.
3. Direct staff to continue seeking cost-saving options related to Workers' Compensation.
4. Direct staff to obtain an actuarial calculation (for the 2017 Long Term Liability Study) of interest savings achieved by expediting payment of OCFA's pension liability.

C. Audited Financial Reports for the Fiscal Year Ended June 30, 2016
Presented by: Jim Ruane, Finance Manager/Business Services Department
Budget and Finance Committee Recommendation: *APPROVE*
Recommended Actions:
1. Receive and approve the reports.
2. Review the calculations used to determine the fund balance amounts assigned to the capital improvement program and workers' compensation, and confirm the calculations' consistency with the OCFA's Assigned Fund Balance Policy.

D. Approve Contingency Budget for Audio Video Systems Upgrade Project
Presented by: Mike Schroeder, Assistant Chief/Support Services Department

Recommended Action:
Approve and authorize the Purchasing Manager to add a 10% contingency to the Western Audio Visual Purchase Order in the amount of $51,229 under the condition that these additional funds may only be utilized in the event of an emergent situation that must be addressed immediately and cannot wait for approval by the Board of Directors.

E. Request by Director Barnett: Pension Termination Liability Estimate, Pension Liability Data Extract, Pension Reform Committee, & Pre-Retirement Workers' Compensation Data
Presented by: Lori Zeller, Assistant Chief/Business Services Department

Recommended Actions:
1. Reaffirm Board's prior September 22, 2016, direction to forward the topic to the Pension Reform Ad Hoc Committee for its review.
2. Receive oral status report from the Pension Reform Ad Hoc Committee Chair.

BOARD MEMBER COMMENTS

CLOSED SESSION

CS1. CONFERENCE WITH LABOR NEGOTIATOR
Agency Designated Representative: Lori Zeller, Assistant Chief
Employee Organizations: Orange County Fire Authority Managers Association
Authority: Government Code Section 54957.6

CLOSED SESSION REPORT

ADJOURNMENT - The next regular meeting of the Orange County Fire Authority Board of Directors is scheduled for Thursday, January 26, 2017, at 6:00 p.m.

AFFIDAVIT OF POSTING

I hereby certify under penalty of perjury under the laws of the State of California, that the foregoing Agenda was posted in the lobby, front gate public display case, and website of the Orange County Fire Authority, Regional Fire Operations and Training Center, 1 Fire Authority Road, Irvine, CA, not less than 72 hours prior to the meeting. Dated this 10th day of November 2016.

Sherry A.F. Wentz, CMC
Clerk of the Authority

UPCOMING MEETINGS:

All regular meetings go dark in December

Human Resources Committee Meeting	Tuesday, January 3, 2017, 12 noon
Budget and Finance Committee Meeting	Wednesday, January 11, 2017, 12 noon
Claims Settlement Committee Meeting	Thursday, January 26, 2017, 5:00 p.m.
Executive Committee Meeting	Thursday, January 26, 2017, 5:30 p.m.
Board of Directors Meeting	Thursday, January 26, 2017, 6:00 p.m.

There are no supportive materials
for Presentation Item No. 1A

In connection with the Fire Chief's Report

11/17/16 BOD Meeting

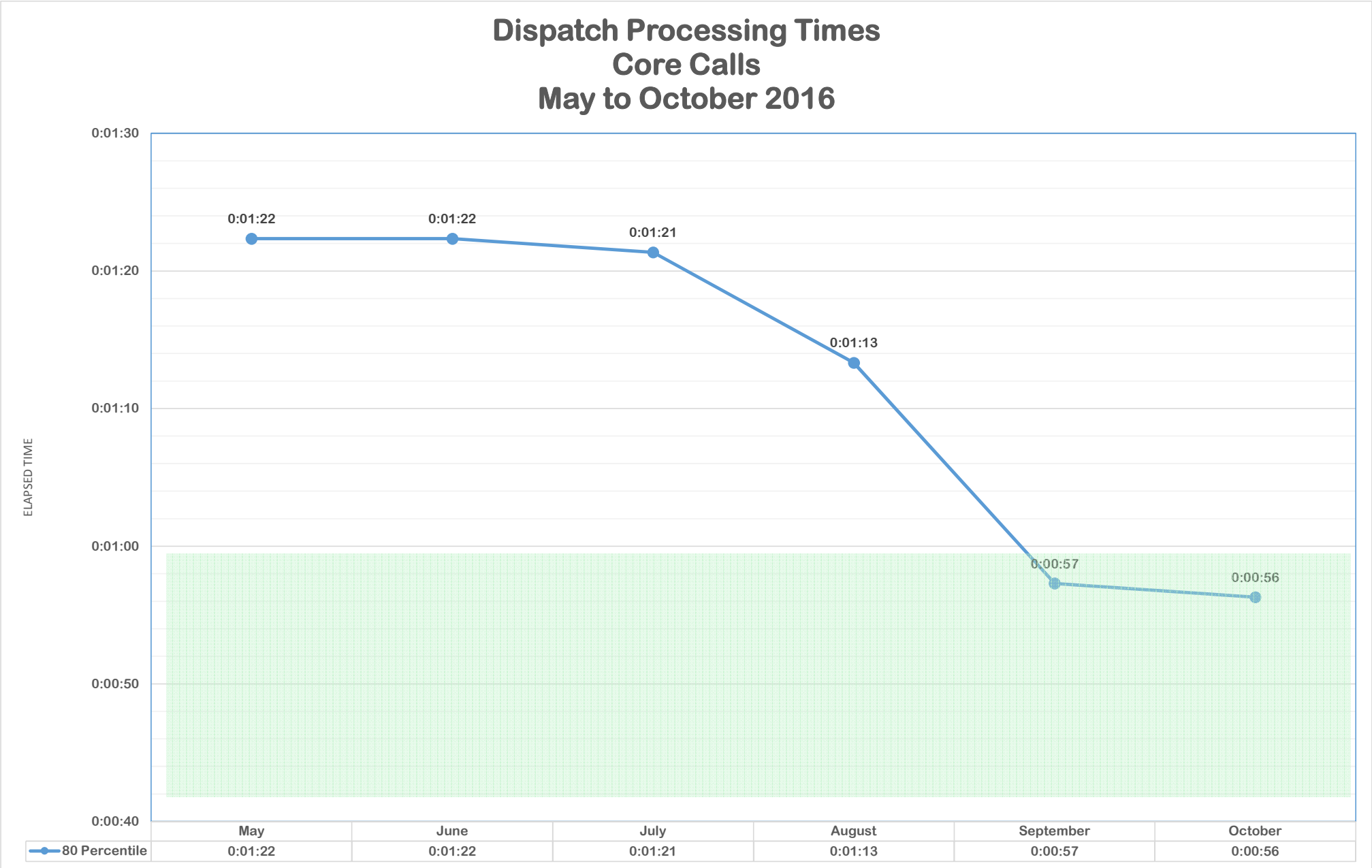

In connection with Fire Chief's Report
11/17/16 BOD Meeting

Orange County Fire Authority
Executive Management

M E M O

DATE: November 10, 2016

TO: OCFA Board of Directors

FROM: Jeff Bowman, Fire Chief

SUBJECT: **Action Items from the October 27, 2016 Board Meeting**

Having been away on vacation during what turned out to be a fairly contentious meeting, and at the request of Director Todd Spitzer, Board Clerk Sherry Wentz and I reviewed the recordings of the Executive Committee and Board of Directors' meetings to familiarize myself with the questions and answers raised during these meetings.

As may be said about all meetings, contentious or otherwise, learning opportunities occur from which all behaviors can improve. To that end, I pulled the following items from the tape with recommendations on how we should proceed.

Issue 1: My early direction to staff was to streamline staff reports wherever possible to clarify the desired Board action and eliminate excessive use of paper. It was always our intent, however, to provide interested Board members with additional information, as requested. One Director specifically requested all attachments in future agenda packets.

Response: Director Gamble spends a great deal of time reviewing and editing staff reports, particularly those in her area of expertise, i.e. construction, contracts, etc. From this point forward, she (and any other Board member who requests them) will receive all pertinent contract and bid documents via a thumb drive. A link will also be provided on all staff reports in the event any Board member wishes to review said documents. I'd like to note that staff can be extremely busy on meeting days, and I ask that should you have questions or require additional information in connection with agenda reports, that you allow us enough lead time to properly assist you.

Issue 2: When contracts are being let that are part of a larger project, i.e. services vs. equipment, how is the Board to determine/understand/approve total project costs?

Response: Staff manages numerous projects at OCFA on a daily basis. These projects are funded within the Board's Adopted Budget. When completion of a project requires entering into a vendor contract in amounts exceeding the thresholds delegated to Authority management, then approval of that contract is submitted to the Executive Committee for approval. However, the expenditure of staff time or purchase of other goods/equipment associated with the project would not

normally be quantified and disclosed in the staff report if those costs are already approved within the Adopted Budget. Management of project costs are part of staff's day-to-day operational responsibilities, and we have not considered this a policy matter for elevation to the Board. Instead, staff will commit that all staff requests for contract approvals whereby the project may include additional associated costs that are not already funded in the budget, including extraordinary staff time, will be disclosed in future staff reports.

Issue 3: Contingency percentages seem to vary by project. Should there be standard contingency percentages and how should they be reconciled?

Response: Staff always tries to set an appropriate limit based on their experience with prior projects or on advice from consultants. In any case, the percentages, how they are to be utilized, and Board approvals/final accounting will be clarified via a new Board policy currently being drafted for discussion early next year.

Issue 4: When contracts are being let that potentially involve the use of subcontractors, how will the subcontractor's insurance be monitored?

Response: Per the Board's direction at its October 27 meeting, staff is assembling information about current insurance practices, the potential need for additional resources, including the potential use of technology-based monitoring solutions to reduce the burdens of insurance tracking, and surveying member agencies' current practices. Staff will bring the item back for consideration at a future meeting.

Recommendation:

Not discussed at the Board meeting is a suggestion from staff that when items are pulled from the Consent Calendar by Board members or members of the public for discussion, the Board Chair shall request from the appropriate Committee Chair a summary of that committee's prior action on the matter.

While the above topics are actions that I and my executive staff will be taking, I also am seeking support from the Board. OCFA's continued growth can be further fostered with the Board's engagement on policy matters, while allowing the executive staff to manage the day-to-day operations of OCFA. I understand that this requires a certain level of trust from the Board, and your confidence in staff to carry out the policy directives that you have established for us. Please feel free to call me or the staff members listed in each staff report if you need more information than what we provided in the agenda materials. We can best achieve positive results when we know of your information needs in advance.

MINUTES
ORANGE COUNTY FIRE AUTHORITY

Board of Directors Regular Meeting
Thursday, October 27, 2016
6:00 P.M.

Regional Fire Operations and Training Center Board Room
1 Fire Authority Road
Irvine, CA 92602-0125

CALL TO ORDER
A regular meeting of the Orange County Fire Authority Board of Directors was called to order on October 27, 2016, at 6:07 p.m. by Chair Hernandez

INVOCATION
Chaplain Duncan McColl offered the invocation.

PLEDGE OF ALLEGIANCE
Director Baker led the Assembly in the Pledge of Allegiance to the Flag.

ROLL CALL

Robert Baker, San Clemente
Lisa Bartlett, County of Orange
Carol Gamble, Rancho Santa Margarita
Shelley Hasselbrink, Los Alamitos
Gene Hernandez, Yorba Linda
Jeffrey Lalloway, Irvine
John Perry, San Juan Capistrano
Ed Sachs, Mission Viejo
David Shawver, Stanton
Todd Spitzer, County of Orange
Michele Steggell, La Palma
Phillip Tsunoda, Aliso Viejo
Rick Barnett, Villa Park
Laurie Davies, Laguna Niguel
Craig Green, Placentia
Noel Hatch, Laguna Woods
Robert Johnson, Cypress
Al Murray, Tustin
Dwight Robinson, Lake Forest
Don Sedgwick, Laguna Hills
David Sloan, Seal Beach
Vicente Sarmiento, Santa Ana
Elizabeth Swift, Buena Park

Absent: Joseph Muller, Dana Point
Tri Ta, Westminster

Also present were:
Assistant Chief Dave Thomas
Assistant Chief Brian Young
General Counsel David Kendig
Communications Director Sandy Cooney
Assistant Chief Mike Schroeder
Assistant Chief Lori Zeller
Assistant Chief Lori Smith
Clerk of the Authority Sherry Wentz

PRESENTATIONS
No items.

REPORT FROM THE BUDGET AND FINANCE COMMITTEE CHAIR (F: 11.12)

Budget and Finance Committee Chair Sachs deferred the report to Vice Chair Swift as he was not in attendance at this meeting. Budget and Finance Committee Vice Chair Swift reported at its October 12, 2016, meeting, the Committee received and filed the Quarterly Status Update Orange County Employees' Retirement System, reviewed the Community Risk Reduction Fee Development directing staff to provide an additional review of the exemption policy, time allocations for pre/post plan review, and to return the item to the Committee for additional consideration; voted unanimously to send the Fourth Quarter Financial Newsletter and the Monthly Investment Reports to the Executive Committee for approval; and send the Updated Cost Reimbursement Rates to the Board of Directors to approve and adopt the proposed updated rate schedules effective October 28, 2016. Vice Chair Swift noted Director Carol Gamble's presence for the discussion of the Subcontractor Insurance Requirements, that the Committee discussed at length the two proposed options, and unanimously approved sending the item to the Board of Directors with its recommendation to proceed with Option 1 - to place responsibility on the primary contractor to verify that any subcontractors have obtained the required insurance.

Stephen Wontrobski, Mission Viejo resident, commented on his public records request to review selected employee's timesheets.

Director Sarmiento arrived at this point (6:11 p.m.).

REPORT FROM THE HUMAN RESOURCES COMMITTEE CHAIR (F: 11.12)

Human Resources Committee Chair Shawver reported at the October 4, 2016, the Committee received and filed the Workers' Compensation Program Update; Quarterly Human Resources Project Update; the Board Member Classification; and the Professional Standards Unit Update, and discussed and voted unanimously to send the Environmental Health and Safety Specialists Classification to the Executive Committee, with its recommendation to approve the new classification and corresponding salary range.

REPORT FROM THE CLAIMS SETTLEMENT COMMITTEE CHAIR (F: 11.12)

There was no report, due to the cancellation of the meeting.

Director Davies arrived at this point. (6:20 p.m.).

REPORT FROM THE FIRE CHIEF (F: 11.14)

In Chief Bowman's absence, Assistant Chief Brian Young reported the Fire Chief's report on the Fire Captain Testing Process would be presented at the next Board of Directors meeting. He also announced two invitations to the Board, "Extreme Ownership" training with former Navy Seal Jocko Willink, and the upcoming Reserve Firefighter Academy 19's Graduation Ceremony.

Assistant Chief Dave Thomas provided a brief update on State Wildland fires.

Assistant Chief Lori Zeller reviewed the Board of Directors meeting schedule. There was no opposition to its bi-monthly schedule for 2017, and it was noted a special meeting could be called as necessary.

Assistant Chief Schroeder presented an update on the Capital Improvement Program (CIP) First Quarter Update FY 2016-17. Director Sachs asked staff to include a listing of future CIP projects to the Quarterly Update.

PUBLIC COMMENTS (F: 11.11)

Stephen Wontrobski, Mission Viejo resident, addressed the subject of equity.

2. MINUTES

A. **Minutes from the September 22, 2016, Regular Board of Directors Meeting** (F: 11.06)

Director Barnett requested the word "termination" be removed from the Minutes regarding his comment to Agenda Item 3B.

On the motion of Director Johnson and second by Director Davies, the Board of Directors approved the September 22, 2016, Regular Board of Directors Minutes as amended. Director Sachs and Chair Hernandez were recorded as abstentions due to their absence from the meeting.

3. CONSENT CALENDAR (Agenda Items No. 3C and 3D were pulled for separate consideration.)

A. Updated Cost Reimbursement Rates (F: 15.12)

On motion of Director Lalloway and second by Director Johnson, the Board of Directors voted unanimously by those present to approve and adopt the proposed updated Cost Reimbursement Rate schedules effective October 28, 2016.

B. Budget and Contract Adjustment for Firefighter Turnout Clothing (F: 19.12)

On motion of Director Lalloway and second by Director Johnson, the Board of Directors voted unanimously by those present to:

1. Direct staff to release excess General Fund reserves and increase appropriations in the amount of $2,300,000 in the General Fund (Fund 121) for one-time funding to rollout a second set of turnout clothing for every firefighter.
2. Approve and authorize the Purchasing Manager to increase the AllStar contract (B01569-1) by $2,500,000 total for the remaining two years for the purchase of additional turnout clothing.

C. Award of Public Works Bid RO2155 Audio Video Systems Upgrade Project (F: 19.07B11)

Director Gamble pulled this item for separate consideration of the contract language.

Discussion ensued concerning typo corrections to the contract's method of payment percentage and signature block expiration date, use of contingency funds, conditional and unconditional releases, and subcontractor insurance.

On motion of Director Gamble and second by Director Lalloway, the Board of Directors voted by those present to approve the recommended actions without contingencies:
1. Approve the plans and specifications for the audio/visual systems upgrades.
2. Accept the Western Audio Visual bid of September 14, 2016.
3. Approve and award the public works contract to Western Audio Visual in the amount of $512,296.52, with changes.
4. All change orders will be subject to Executive Committee approval.
5. Provide contractor's proposal and project timeline to Executive Committee members.

Director Sachs voted in opposition.

D. Subcontractor Insurance Requirements (F: 18.10A)

Director Gamble pulled this item for separate consideration of the subcontractor requirements.

Discussion ensued regarding the prior options considered by the Budget and Finance Committee, potential need for additional resources, current insurance process, technology-based monitoring programs, and Directors checking in with their respective City Managers on their agency's current practice.

By consensus the Board of Directors directed staff to bring this item back to a future meeting.

END OF CONSENT CALENDAR

4. PUBLIC HEARING(S)

No items.

5. DISCUSSION CALENDAR

A. Final Financial Report for Construction of Fire Station 56 (Sendero Ranch) (F: 19.07C56)

Assistant Chief Mike Schroeder presented the Final Financial Report for Construction of Fire Station 56.

On motion of Director Johnson and second by Director Murray the Board of Directors voted by those present to receive and file the report as submitted.

B. Progress Report for Phase-Two of Emergency Medical Services Service Delivery Enhancements (F: 17.10D)

Assistant Chief Brian Young provided a PowerPoint overview of the Phase-Two Emergency Medical Services Service Delivery Enhancements.

Stephen Wontrobski, Mission Viejo resident, spoke in opposition.

On motion of Director Johnson and second by Director Murray, the Board of Directors voted by those present to receive and file the report.

BOARD MEMBER COMMENTS (F: 11.13)

Director Sarmiento noted the Red Cross and staff will be holding a smoke detector installation event in Santa Ana.

Director Green commended Division Chief Randy Black who provided a lifesaving certificate to an eight year old honored for saving her grandmother's life.

Director Johnson thanked the crew of Fire Station 17 for hosting the October 15 Fire Prevention Open House.

Director Lalloway thanked Director Gamble for her contract review.

Director Murray thanked staff for coordinating the trips to Emmitsburg, Maryland and Sacramento Firefighters Memorial events.

Vice Chair Swift noted as a survivor herself, she wore the OCFA's "pink tee shirt" to support Breast Cancer Awareness month, and reported on her attendance at the Benevolent Associations 6th Annual Picnic.

Director Spitzer noted two upcoming "Town Hall" events regarding Santiago safety to assess the reserve firefighter resources and equipment.

Director Shawver thanked Fire Station 46 for its handling of a recent mobile home fire.

Director Hatch commented on discussions regarding the evening's meeting.

Director Hasselbrink reported on her attendance at the Kevin Woyjeck Memorial Highway unveiling ceremony that took place in Seal Beach.

Director Barnett thanked Director Gamble and expressed concern with the lack of support given to the offer by Stanford University to review the pension liability with OCERS. He requested the topic be place on the agenda, again.

Chair Hernandez reported attending the Firefighter Memorial event in Emmitsburg, Maryland, the Kevin Woyjeck Highway Memorial ceremony, and Fire Station 32's October 15 Fire Prevention Open House.

CLOSED SESSION
No items.

ADJOURNMENT – Chair Hernandez adjourned the meeting at 8:25 p.m. The next regular meeting of the Orange County Fire Authority Board of Directors is scheduled for Thursday, November 17, 2016, at 6:00 p.m.

Sherry A.F. Wentz, CMC
Clerk of the Authority

Orange County Fire Authority

AGENDA STAFF REPORT

Board of Directors Meeting
November 17, 2016

Agenda Item No. 3A
Consent Calendar

Annual Statement of Investment Policy and Investment Authorization

Contact(s) for Further Information

Lori Zeller, Assistant Chief Business Services Department	lorizeller@ocfa.org	714.573.6020
Tricia Jakubiak, Treasurer Treasury & Financial Planning	triciajakubiak@ocfa.org	714.573.6301

Summary

This agenda item is submitted to the Committee in compliance with the Authority's Investment Policy that requires the Statement of Investment Policy to be reviewed and approved annually by the Budget and Finance Committee and the Board of Directors. This item is also being submitted in compliance with Government Code provisions which require the Board of Directors to review and renew the annual delegation of investment authority to the Treasurer for a one-year period.

Prior Board/Committee Action

Budget and Finance Committee Recommendation: *APPROVE*

At its regular November 9, 2016, meeting, the Budget and Finance Committee reviewed and unanimously recommended approval of this item.

RECOMMENDED ACTION(S)

1. Review and approve the submitted Investment Policy of the Orange County Fire Authority, to be effective January 1, 2017.
2. Pursuant to Government Code Sections 53601 and 53607, renew delegation of investment authority to the Treasurer for a one-year period, to be effective January 1, 2017.

Impact to Cities/County

Not Applicable.

Fiscal Impact

Not Applicable.

Background

The Statement of Investment Policy is reviewed annually and revised by the Treasurer, if needed. The proposed Policy is then submitted to the Budget and Finance Committee and Board of Directors for approval every November to become effective on January 1 for the calendar year.

During the past year, there were no significant legislative amendments to the California Government Code regarding investments; therefore, staff is not proposing any changes to the OCFA's Investment Policy for 2017.

The Proposed Investment Policy is attached for review and approval, to be effective January 1, 2017. (Attachment).

Attachment(s)
Proposed Investment Policy

Attachment

ORANGE COUNTY FIRE AUTHORITY

INVESTMENT POLICY

Calendar Year 2017

INVESTMENT POLICY

History of OCFA's Investment Policy & Cash Management Program

Following the formation of the Orange County Fire Authority in March 1995, OCFA funds were initially invested in the Orange County Investment Pool (OCIP) and the Local Agency Investment Fund (LAIF). At that time, investment options were limited since the Authority was using County services for treasury, banking, and accounting systems pending implementation of its own systems. During this transitional stage, OCFA staff worked to establish independent banking, custodian, and broker/dealer agreements, installed a portfolio management system, and implemented the Banner Financial System. Staff also researched and drafted a comprehensive Investment Policy. On January 1, 1997, the OCFA Board of Directors adopted the Investment Policy and appointed a Treasurer. Immediately thereafter, OCFA assumed in-house responsibility for Treasury services and implemented its own Cash Management & Investment Services Program.

As the Cash Management program evolved, all remaining funds in the OCIP were gradually withdrawn. The Treasurer invested these funds in individual securities and scheduled maturities to correspond with cash flow needs. Investments included Treasury and Federal Agency securities, prime quality commercial paper, money market mutual funds (U.S. Treasury Obligations), and LAIF.

Since inception in 1997, the Treasurer has continued to refine the Investment Policy on an annual basis to meet the changing needs of the Authority. The Policy has also been formally recognized by the Association of Public Treasurer's of the United States and Canada (APTA US&C). Certification is awarded when an investment policy meets the professional standards set forth by MTA US&C. Agencies may submit for re-certification after significant changes are made to the Policy.

During the past year, there were no significant legislative amendments to the California Government Code regarding investments that would require a change to the 2016 Investment Policy.

INVESTMENT POLICY

TABLE OF CONTENTS

Policy 1
Scope 1
Prudence 2
Objectives 2
Authorization and Delegation of Authority 2
Duties & Responsibilities 3
Ethics & Conflicts of Interest 3
Authorized Financial Dealers and Institutions 4
Authorized Investment Advisors and Investment Managers 5
Authorized and Suitable Investments 5
Unallowable Investments / Restrictions 7
Investment Pools 7
Collateralization 8
Safekeeping and Custody 8
Diversification 8
Internal Control 9
Performance Standards 9
Reporting 10
Investment Policy Adoption 12

Glossary ..... Glossary - 1

INVESTMENT POLICY

ORANGE COUNTY FIRE AUTHORITY

1. **Policy:** The Orange County Fire Authority (the "Authority") shall invest public funds in such a manner as to comply with state and local laws; ensure prudent money management; provide for daily cash flow requirements; and meet the objectives, in priority order, of safety, liquidity, and return on investment.

2. **Scope:** This Investment Policy applies to all financial assets of the Orange County Fire Authority which are available for investment by the Authority's Treasurer; except that funds in the Authority's deferred compensation plan, defined contribution plan**,** and security deposits held in escrow in lieu of retention are excluded from this investment policy. The funds governed by this policy may be referred to herein as the OCFA portfolio.

   2.1. The Authority's funds are accounted for in the Comprehensive Annual Financial Report (CAFR) and include the funds listed below and any new fund created by the Board of Directors unless specifically exempted.

   Fund 121 General Fund
   Fund 122 Facilities Maintenance and Improvements
   Fund 123 Capital Projects
   Fund 124 Communications and Information Systems Replacement
   Fund 133 Vehicle Replacement
   Fund 171 Structural Fire Fund Entitlement
   Fund 190 Self-Insurance Fund
   Fund 422 Extra-Help Retirement Trust

   2.2. Bond fund investments will be held separately and made in accordance with the bond debenture requirements.

   2.3. Retiree Medical Trust Funds may be held separately from the OCFA portfolio and invested in accordance with California Government Code Section 53620 to 53622 and/or Section 31694.3.

3. **Prudence:** The standard of prudence to be used shall be the "prudent investor" standard (in Probate Code Sections 16040-16042 and 16045-16054 cited as Uniform Prudent Investor Act) and shall be applied in the context of managing the overall portfolio, not to a single item within a diversified portfolio. Investments shall be made with judgment and care (under circumstances then prevailing) which persons of prudence, discretion and intelligence exercise in the management of their own affairs, not for speculation, but for investment, considering the probable safety of their capital as well as the probable income to be derived.

4. **Objectives:** The primary objectives of investment activities, in order of priority, shall be:

   4.1. *Safety*: Safety of principal is the prime objective of the investment program. The investment program shall be designed and implemented to ensure preservation of capital in the overall portfolio. Invested funds shall be **diversified** to minimize the risk of loss resulting from over concentration of assets in a specific maturity, specific issuer, or specific class of securities.

   4.2. *Liquidity*: The investment portfolio shall be structured in a manner which strives to time the maturity of securities with cash requirements. Additionally, since not all possible cash demands can be anticipated, the portfolio should consist of securities with an active secondary or resale market.

   4.3. *Return on investment*: The Authority shall attempt to obtain a reasonable return provided that the requirements of safety and liquidity are first met.

5. **Authorization and Delegation of Authority:** Under California Government Code Section 53601, the legislative body of a local agency (i.e., the Authority's Board of Directors) is authorized to invest surplus moneys as specified in that code section. In accordance with California Government Code Section 53607, this authority is delegated to the Treasurer of the Authority for a one-year period. Subject to review, the Board of Directors may renew the delegation of authority under this code section each year. The Treasurer will be responsible for all investment transactions and shall establish a system of controls to regulate the activities of officials involved in any aspect of the investment program.

   5.1. *Investment Procedures:* The Treasurer shall establish written procedures for the operation of the investment program consistent with this Investment Policy. The procedures should include reference to: safekeeping, repurchase agreements, wire transfer agreements, banking service contracts and collateral/depository agreements. The procedures shall include explicit delegation of authority to persons responsible for investment transactions. No person may engage in an investment transaction, except as provided under the terms of this policy and the procedures established by the Treasurer.

   5.2. *Delegation in Treasurer's Absence***:** In the Treasurer's absence, the Treasurer delegates investment authority in the following order to (1) the Assistant Chief, Business Services and (2) the Deputy Fire Chief or Fire Chief's designee.

6. **Duties and Responsibilities:**

6.1. *Treasurer*: Charged with responsibility for all public funds and securities belonging to or under the control of the Authority, and for the deposit and investment of those funds in accordance with the principles of sound treasury management and in accordance with the applicable laws, ordinances and policies adopted by the Authority.

6.2. *Auditor*: Charged with recording investment activity in the accounting records and with verifying the Treasurer's records with broker confirmations, bank statements and safekeeping records.

6.3. *Assistant Chief, Business Services*: Charged with responsibility (in the absence of the Treasurer) for all public funds and securities belonging to or under the control of the Authority and for their deposit. Duties related to investment activities shall be performed by staff other than those responsible for the accounting of those investments.

6.4. *Deputy Fire Chief or Fire Chief's designee*: Charged with responsibility (in the absence of the Treasurer and Assistant Chief, Business Services) for all public funds and securities belonging to or under the control of the Authority and for their deposit. Duties related to investment activities shall be performed by staff other than those responsible for the accounting of those investments.

6.5. *Fire Chief*: Charged with responsibility for implementation of and conformance to the policies and procedures approved by the Board of Directors for the investment of the Authority's funds.

6.6. *Budget and Finance Committee*: Charged with responsibility for investment oversight. The Committee shall review the monthly investment reports and significant investment activity being undertaken. The Committee's recommendations shall be reported in a monthly investment report to the Executive Committee.

6.7. *Executive Committee*: Charged with responsibility to receive, review and approve the monthly investment report, following review by the Budget and Finance Committee.

6.8. *Board of Directors*: May delegate to the Treasurer for a one-year period the authority to invest the Fire Authority's funds. Subject to review, the Board may renew the delegation of this authority each year. The Board shall also annually consider and approve a written Statement of Investment Policy at a public meeting. Any change to the Investment Policy at any time shall also be considered by the Board at a public meeting.

7. **Ethics and Conflicts of Interest**: All officers, employees, and participants in the Authority's investment process shall:

7.1. Act responsibly as custodians of the public trust.

7.2. Avoid any transaction that might impair the public confidence in the Authority's ability to serve the citizens of our area of responsibility.

7.3. Refrain from personal business activities that could conflict with proper execution of the investment program, or which could impair their ability to make impartial investment decisions.

7.4. Abide by the Authority's adopted Conflict of Interest Code, which by reference is incorporated into this Investment Policy.

7.5. The Treasurer, the Assistant Chief, Business Services, the Deputy Fire Chief or Fire Chief's designee and the Fire Chief shall be prohibited from doing personal investment transactions with any broker or securities dealer with whom OCFA does business, with the exception of the OCFA's primary bank for banking services. Employees shall subordinate their personal investment transactions to those of OCFA, particularly with regard to the time of purchases and sales.

8. **Authorized Financial Dealers and Institutions**: To promote the optimum yield on the investment of Authority funds, investment procedures shall be designed to encourage competitive bidding on transactions from approved financial institutions or broker/dealers.

8.1. On a biennial basis, the Treasurer shall recommend a list of at least three financial institutions and broker/dealers who are authorized to provide investment services. The list shall be approved by the Budget and Finance Committee and the Executive Committee. All financial institutions and broker/dealers who wish to be considered for the list must meet the following minimum requirements:

8.1.1 Must certify that they have read and agree to comply with the investment policies of the Authority.

8.1.2 Must be a primary or regional dealer that qualifies under the Securities and Exchange Commission Rule 15C3-1 (Uniform Net Capital Rule).

8.1.3 Must have a branch office in California.

8.1.4 Must be experienced in institutional trading practices and familiar with the California Government Code as related to investments for local governmental agencies.

8.1.5 Must have been in business for at least three years.

8.1.6 Must provide current audited financial statements.

8.1.7 Must provide proof of Financial Industry Regulatory Authority (FINRA) certification.

8.1.8 Other criteria as may be established in the *Investment Procedures Manual* of the Authority.

8.2. All financial institutions in which the Authority's public funds are deposited will supply the Treasurer with the following:

8.2.1 Current audited financial statements.

8.2.2 Depository contracts.

8.2.3 A copy of the latest FDIC call report.

8.2.4 Proof that the institution is state or federally chartered.

9. **Authorized Investment Advisors and Investment Managers:**

Authorized Investment Advisors
Although the Authority does not currently use an investment advisor, these policies and procedures shall be applicable if an investment advisor is utilized in the future to provide advice and guidance for the investment of OCFA portfolio funds**.** Under Government Code, the Authority is authorized to engage specially trained and experienced firms for economic advice and services. The Board of Directors must approve, in advance, all contracts with an investment advisor, after review by the Authority's Counsel. The investment advisor may only provide advice and may not effectuate trades; he/she may not make investment decisions. The Treasurer shall provide the investment manager with a copy of the Authority's Investment Policy.

Authorized Investment Managers
The provisions above for authorized investment advisors also apply to authorized investment managers. In addition, an investment manager may effectuate trades upon specific authorization for each transaction; however, he/she may not make investment decisions. All investment decisions must be made and approved by the Treasurer in advance, before the investment manager is authorized to execute a transaction. The Treasurer shall provide the investment manager with a copy of the Authority's Investment Policy. Upon execution of any trade, the Authority must receive confirmation directly from the broker/dealer and the custodian, not from the investment manager. Investments recommended by the investment manager should be safe kept by the Authority's regular custodian, and not with the investment manager.

10. **Authorized and Suitable Investments**: The Authority is empowered by statute (California Government Code Section 53600 et seq., 53620 et seq., and Section 5922[d]) to invest in the following types of securities (see Section 15 of this Policy for maximum percentage limits imposed under Authority Policy):

10.1. U.S Treasury or Federal Agency securities.

10.2. Collateralized or insured passbook savings accounts and demand deposits.

10.3. Collateralized or insured certificates of deposit (or time deposits) placed with commercial banks (maximum term five years).

10.4. Bankers acceptances (issued by one of the 10 largest domestic banks or 20 largest international banks based on assets) with maturities not to exceed 180 days. State statute restricts bankers' acceptances to no more than 40% of the agency's surplus funds and no more than 30% in any one commercial bank. Authority policy is more restrictive, with a maximum 25% limit (see Section 15.1.4). Bankers' acceptances are to be purchased only from institutions that are well capitalized as the term is defined in the glossary.

10.5. Money market mutual funds whose portfolio consists solely of short-term treasury securities (i.e., one year or less remaining until maturity, at purchase). Mutual funds must be AAA rated by at least 2 of the 3 largest rating agencies.

10.6. Repurchase agreements whose underlying collateral consists of U.S. Treasury obligations or U.S. government agency obligations and the collateralization level must be in accordance with Government Code section 53601(i)(2), effective January 1, 1996 (maximum maturity of 14 days). A Public Securities Association (PSA) Master Repurchase Agreement is required between the Authority and the bank or broker/dealer for all repurchase agreements transacted. Direct investment in reverse repurchase agreements is prohibited.

10.7. Local Agency Investment Fund (State of California Pool).

10.8. Commercial paper in compliance with the following requirements:

10.8.1 Must be rated highest-quality by at least two of the following three nationally recognized rating agencies. Highest-quality ratings are defined as (1) Moody's Investor Services rating of P1; (2) Standard & Poor's rating of A1/A1+; (3) Fitch rating of F1/F1+.

10.8.2 Investments will not be made with commercial paper issuers placed on negative credit watch by any one of the above rating agencies.

10.8.3 Commercial paper issuers must be domestic corporations having assets in excess of $500,000,000 and having an AA or better rating on its long term debentures as provided by Moody's, Standard & Poor's, or Fitch.

10.8.4 Purchases of eligible commercial paper may <u>not</u>: (a) exceed 270 days to maturity; or (b) exceed 15% of the cost value of the portfolio. Although Government Code allows a maximum investment in commercial paper of 25%, Authority Policy maintains a 15% maximum, which is more restrictive.

10.8.5 The Treasurer shall conduct research on commercial paper issuers prior to investing OCFA funds with those issuers. The Treasurer will avoid investing in issuers with current events that involve negative financial implications that could lead to a downgrade to their credit rating. Sources of research will include, at a minimum, WSJ.com, Bloomberg.com, Marketwatch.com, and CNNMoney.com.

10.9. Negotiable certificates of deposit, issued by national or state-chartered banks or state or federal savings institutions, commercial bank, savings bank (savings and loan association), or credit union that uses a private sector entity that assists in the placement of certificates of deposit under specified conditions. Government code limits negotiable certificates of deposit to 30% of the portfolio. Authority Policy, which is more restrictive, limits investment in these securities to 25% (see Section 15.1.5).

10.10. Proceeds of bonds or other indebtedness and any moneys set aside and pledged to secure payment of the bonds may be invested in accordance with the resolution, indenture, or other statutory provisions governing the issuance of those bonds or indebtedness.

10.11. Retiree Medical Funds may be held in a separate trust fund and invested as permitted under California Government Code Section 53620 to 53622 and/or Section 31694.3 for the purpose of paying health insurance benefits to retirees.

11. **Unallowable Investments / Restrictions**: The Authority shall **not** invest OCFA portfolio funds in the following instruments:

11.1. Derivatives, except for indirect investment through the State's Local Agency Fund.

11.2. Reverse repurchase agreements, although indirect investment through a pool is allowable up to a maximum of ten percent (10%) of the pool's portfolio.

11.3. Financial futures or financial options.

11.4. Common stocks or corporate bonds.

12. **Investment Pools:** Governmental sponsored pools and/or mutual funds should be carefully reviewed prior to investing and should be monitored on an ongoing basis. Requisite information on the pool includes the following:

12.1. A statement of investment policy and objectives.

12.2. A list of allowable investments.

12.3. Disclosure regarding settlement and safeguarding of investments.

12.4. Description of securities pricing (fair value) and whether GASB 31 compliant.

12.5. An explanation of interest calculations and distributions, plus fee disclosures.

12.6. Deposit and withdrawal restrictions.

12.7. Disclosure of audit findings and reports.

13. **Collateralization:** Collateral must always be held by an independent third party with whom the Authority has a current custodial agreement.

13.1. State law regarding collateralization of deposits of public funds requires that securities be held by an agent (i.e., a trust company) of the bank, which may include the bank's trust department only if acceptable to both the bank and the Treasurer, pursuant to California Government Code Sections 53656 and 53658. Under the provisions of California Government Code Section 53652, banks are required to secure the deposits of public funds, including certificates of deposits, by: a) pledging government securities with a value of 110% of the principal and accrued interest; b) pledging first trust deed mortgage notes having a value of 150% of the total agency deposit; or c) a letter of credit drawn on the Federal Home Loan Bank at 105% of the total agency deposit. Deposits must be secured at all times with eligible securities pursuant to Section 53651. A copy of the Call Report of Local Agency's Deposits and Securities must be supplied to the Authority and retained to document compliance with the collateral requirements.

13.2. Collateralization of repurchase agreements must be at least 102% of the market value of principal and accrued interest. Collateral must consist of U.S. Treasury obligations or U.S. Agency obligations. Other specific requirements on repurchase agreements must be addressed in a master repurchase agreement between the Authority and the bank or broker/dealer.

13.3. The Treasurer, at his/her discretion, may waive the collateral requirements for deposits up to $250,000 which are fully insured by the Federal Deposit Insurance Corporation. The right of collateral substitution is granted.

14. **Safekeeping and Custody:** All security transactions shall be conducted on a delivery-versus-payment (DVP) basis. Securities will be held by a third party qualified custodian and evidenced by safekeeping receipts. The trust department of the Authority's bank may act as third party custodian, provided that the custodian agreement is separate and apart from the banking agreement.

15. **Diversification**: The Authority shall maintain a diversified portfolio to minimize the risk of loss resulting from over concentration of assets in a specific maturity, issuer, or security type.

15.1. *Restrictions on Securities*: At no time shall the Authority's portfolio be invested in a

single security type or in a single financial institution or pool in excess of 15% of the total investment portfolio, with the following exceptions:

15.1.1	Treasury securities	100%
15.1.2	Local Agency Investment Fund	75% *(Excludes moneys deposited in LAIF bond funds.)*
15.1.3	Federal Agency securities	75%
15.1.4	Bankers' Acceptances	25%
15.1.5	Negotiable CD's	25%

15.2. *Exception for Automatic Overnight Sweep*: There shall be no restriction on the amount that is automatically swept from the Authority's bank into the Highmark Money Market Mutual Fund of U.S. Treasury Obligations *on an overnight basis*, in order to accommodate immediate investment of large inflows of property taxes or other receipts, pending diversified investment into other securities by the Treasurer.

15.3. *Maturity Diversification*: Every effort will be made to match investment maturities to cash flow needs. Matching maturities with cash flow dates will reduce the need to sell securities prior to maturity, thus reducing the market risk. Maximum maturities shall be as follows:

15.3.1 At least 50% of the portfolio is limited to a period of one year or less.

15.3.2 Unless matched to a specific requirement and approved by the Executive Committee and the Board of Directors, no portion of the portfolio may exceed five years.

16. **Internal Control**:

16.1. Internal policies and procedures shall be developed to assure that appropriate controls are in place to document and confirm all transactions. A separate *Investment Procedures Manual* shall be established to assist Treasury staff with daily operations and shall be reviewed at least annually by the Treasurer.

16.2. An independent analysis by an external auditor shall be conducted annually to review internal control, account activity and compliance with policies and procedures.

16.3. To provide further protection of the Authority funds, written instructions require the Authority's bank to obtain verification of all wire transfers from two of the three following officers:

16.3.1 Treasurer.

16.3.2 Assistant Chief, Business Services.

16.3.3 Deputy Fire Chief.

17. **Performance Standards**: The investment portfolio shall be designed with the objective of obtaining a rate of return throughout budgetary and economic cycles, commensurate with investment risk constraints and cash flow needs.

17.1. *Investment Strategy:* The Authority's basic investment strategy is to buy and hold investments until maturity. However, the Treasurer may sell a security due to adverse changes in credit or market risk or due to unexpected cash flow needs.

17.2. *Market Yield (Benchmark):* The basis used by the Treasurer to determine whether market yields are being achieved shall be the rates of return from the following combination of indices: Local Agency Investment Fund (LAIF) and 3-month, 6-month and 1-year Treasury Bills (constant maturity).

17.3. *Review*: The investment policy shall be reviewed at least annually by the Budget and Finance Committee and approved by the Board of Directors to ensure its consistency with the overall objectives of safety (including diversification), liquidity and return, as well as its relevance to current law and financial/economics trends. The Authority's philosophy prohibits speculation (i.e., purchasing securities with the intent to profit from anticipated changes in future market conditions). Leveraging or borrowing money for the purpose of investing is specifically prohibited.

18. **Reporting:**

18.1. *Monthly Reports*: In compliance with Government Code Sections 53607 and 53646**,** the Treasurer shall file a monthly investment report with the Clerk of the Board, who will submit copies to the Board of Directors, the Executive Committee, the Budget and Finance Committee, the Fire Chief, the Assistant Chief of Business Services, the Auditor, and the Authority's outside auditor (as required). The investment report will be agendized for the monthly meetings of the Budget and Finance Committee and the Executive Committee, and any Board member may request inclusion of the report on the Board's agenda at any time. This report shall certify that the Treasurer has complied with the Authority's *Investment Procedures Manual* and will include an *Executive Summary,* which provides a condensed summary of the most important information in the report, plus a detailed report covering the following elements:

18.1.1 Type of investments and percent that each type represents in the portfolio.

18.1.2 Issuer.

18.1.3 Purchase date.

18.1.4 Date of maturity.

18.1.5 Amount of deposit.

18.1.6 Face value of the securities.

18.1.7 Current market value of securities.

18.1.8 Portfolio yield and comparison to benchmark.

18.1.9 Interest earnings.

18.1.10 Percentage of portfolio maturing within one year, 1-3 years, 3-5 years and over 5 years.

18.1.11 Statement relating the report to the Investment Policy.

18.1.12 Statement on availability of funds to meet its obligations for the next 30 days and the next 6 months.

18.1.13 Description of funds, investments, or programs managed by contracted parties.

18.1.14 Statement of compliance of the portfolio with the investment policy or manner in which the portfolio is out of compliance.

18.1.15 GASB 31 effects on financial statements.

18.1.16 Comments on the fixed income markets and economic conditions.

18.1.17 Potential changes in future portfolio structure (if any), including risk factors.

18.1.18 Any other information required by the Board.

18.2. *Annual Reports*: The Treasurer shall submit an annual report to the Budget and Finance Committee and the Executive Committee, following the close of the fiscal year which shall certify that the Treasurer has complied with the Authority's investment procedures and detail the following:

18.2.1 Analysis of the composition of the investment fund.

18.2.2 Discussion of investment risk in the portfolio.

18.2.3 GASB 31 impacts.

18.2.4 A review of trends regarding the size of the investment fund.

18.2.5 Portfolio performance and comparison to benchmark.

18.2.6 Investment income.

18.2.7 A statement of anticipated investment fund activity in the next fiscal year.

18.3 **Investment Policy Adoption:** The Treasurer shall annually render to the Fire Chief, the Budget and Finance Committee, and the Board of Directors a Statement of Investment Policy.

Glossary

Active Deposits. Funds which are immediately required for disbursement.

Active investment management. An investment strategy that involves the active trading of securities in an attempt to earn above-average returns on a portfolio. Active investment management requires frequent monitoring of financial markets.

Agency. A debt security issued by a federal or federally sponsored agency. Federal agencies are backed by the full faith and credit of the U.S. Government. Federally sponsored agencies (FSAs) are backed by each particular agency with a market perception that there is an implicit government guarantee. An example of federal agency is the Government National Mortgage Association (GNMA). An example of an FSA is the Federal National Mortgage Association (FNMA).

Arbitrage. Generally, transactions by which securities are bought and sold in different markets at the same time for the sake of the profit arising from a difference in prices in the two markets.

Bankers' Acceptances (BA's). Time drafts or bills of exchange that are accepted payment by banks engaged in the financing of international trade. BA's finance the importation, exportation, shipment or storage of foreign and domestic goods. BA's are usually backed by documentation such as invoices, bills of lading, or warehouse receipts. Upon acceptance by a bank, a BA becomes an irrevocable and unconditional obligation of the accepting bank, while it is also an obligation of the drawer as well as any endorser thereof.

Basis point. By common agreement, .01% of yield on a fixed income security (1/100 of 1%).

Bond Equivalent Yield (BEY). An annual yield, expressed as a percentage, describing the return provided to bond holders. A bond equivalent yield is double the simple interest, semiannual yield. Since Treasury and agency notes and bonds pay interest semiannually, the bond equivalent yield is a way to compare yields from discount securities, such as Treasury bills and bankers' acceptances with yields available from coupon securities. From that usage, this yield measure is also known as the coupon yield equivalent. For securities that pay daily, monthly or quarterly interest, the bond equivalent yield understates the benefits obtained from the compounding of those investments.

Book-entry clearance. A system for the transfer of ownership of securities through entries on the records of a centralized agency. The centralized agency holds securities on behalf of their owners; when the securities are sold, ownership is transferred by bookkeeping entry from the seller to the purchaser. In the case of U.S government securities, securities certificates are not issued, and ownership of the securities is evidenced in computer records maintained by the Federal Reserve System. For other types of securities, book entry clearance is made available through linked or interfaced systems maintained by four securities depositories, which hold securities and act on behalf of their participants.

Book-entry security. A security which is not available to purchasers in physical form. Such a security may be held either as a computer entry on the records of a central holder (as is the case with U.S. certain government securities) or in the form of a single, global certificate.

Book value. The value at which a security is carried on the inventory lists or other financial records of an investor. This value may be the original cost of acquisition of the security, or original cost adjusted by the amortization of a premium or accretion of a discount. The book value may differ significantly from the security's current value in the market.

Broker. A broker brings buyers and sellers together for a commission paid by the initiator of the transaction or by both sides; he does not position or take ownership of the security.

Certificate of Deposit (CD). A deposit of funds, in a bank or savings and loan association, for a specified term that earns interest at a specified rate or rate formula.

Collateralization. Process by which a borrower pledges securities, property or other deposits for the purpose of securing the repayment of a loan and/or security.

Commercial Paper. Unsecured short-term promissory notes issued by corporations, with maturities ranging from 2 to 270 days. May be sold on a discount basis or may bear interest. Firms with lower ratings or without well known names usually back their commercial paper with guarantees or bank letters of credit.

Coupon rate. Interest rate, expressed as a percentage of par or face value, that issuer promises to pay over lifetime of debt security.

Credit Risk. The risk to an investor that an issuer will default in the payment of interest and/or principal on a security.

Current Yield (Current Return). A measure of the simple interest annual yield for interest-bearing investments with maturities of one year or more. To calculate the current yield, the annual coupon interest income is divided by the amount paid to acquire the investment. It is important to note that the current yield is only accurate for investments purchased at par. The current yield calculation includes just one income cash flow - the annual interest income. It ignores the profit or loss resulting from discounts and premiums.

Custody. The service of an organization, usually a financial institution, of holding (and reporting) a customer's securities for safekeeping. The financial institution is known as the **custodian**.

Dealer. An individual or firm who, as a matter of regular business, purchases or sells securities for his account and risk.

Delivery versus payment (DVP). A settlement procedure where payment for a securities purchase is made simultaneously with the transfer of the purchased securities. The same procedure applies for a securities sale; the securities are transferred as payment is made.

Derivative instrument. A security that derives its value from an underlying asset, group of assets, reference rate, or an index value. Some derivative instruments can be highly volatile and result in a loss of principal in changing interest rate environments.

Discount. The amount by which a bond sells under its par (face) value.

Discount securities. Securities that do not pay periodic interest. Investors earn the difference between the discount issue price and the full face value paid at maturity. Treasury bills, bankers' acceptances and most commercial paper are issued at a discount.

Diversification. Dividing investment funds among a variety of securities, offering independent returns, to reduce risk inherent in particular securities.

Effective Annual Yield. A seldom used expression to refer to the yield on an investment expressed on a compound interest basis.

Fed Wire. Computerized network linking the Fed with its district banks, member banks, and primary dealers in government securities.

Federal Agency Securities. A variety of securities issued by several Federally sponsored agencies. Some are issued on a discount basis and some are issued with coupons. Several have the full faith and credit guarantee of the U.S. government, although others do not.

Federal Deposit Insurance Corporation (FDIC). A federal agency that insures bank deposits, currently up to $250,000 per deposit.

Federal funds (Fed Funds). Funds placed in Federal Reserve banks by depository institutions in excess of current reserve requirements. These depository institutions may lend fed funds to each other overnight or on a longer basis. They may also transfer funds among each other on a same-day basis through the Federal Reserve banking system. Fed funds are considered to be immediately available funds.

Fed Funds Rate - Interest rate charged by one institution lending federal funds to another.

Floater. A floating rate security with an interest rate that resets at specified intervals according to an underlying index, such as LIBOR (the London Interbank Offered Rate), and is based on a predetermined formula. The value of a floater will fluctuate as interest rates change and therefore can be very volatile.

Inactive deposits. Funds not immediately needed for disbursement.

Interest rate risk. The risk associated with declines or rises in interest rates which cause an investment in a fixed-income security to increase or decrease in value.

Inverse floater. A security that reacts inversely to the direction of interest rates. These securities can be very volatile and can lose value in a rising interest-rate environment.

Leverage. An attempt to increase the rate of return on an investment by buying securities on margin or using borrowed funds for investment purposes. This practice can be risky if interest rates rise or if investment yields are lower than expected.

Liquidity. The quality of an asset that permits it to be converted quickly into cash without a significant loss of value.

Local Agency Investment Fund (LAIF). A special fund in the State Treasury which local agencies may use to deposit funds for investment and for reinvestment. There is no minimum investment period and the minimum transaction is $5,000, in multiples of $1,000 above that, with a maximum of $50 million for any agency ***(excluding bond funds, which have no maximum)***. It offers high liquidity because deposits can be converted to cash in 24 hours and no interest is lost. All interest is distributed to those agencies participating on a proportionate share determined by the amounts deposited and the length of time they are deposited. Interest is paid quarterly via a check, warrant, or direct deposit to the agency's State Pooled Fund account. The State keeps an amount for reasonable costs of making the investments, not to exceed 1/4 of a percent of the earnings.

Marketability. The measure of ease with which a security can be sold in the secondary market.

Mark-to-Market. The practice of valuing a security of portfolio according to its market value, rather than its cost or book value.

Market Rate of Return. The average yield of the 3-month U.S. Treasury Bill or other index that closely matches the average maturity of the portfolio.

Market Value. The price at which the security is trading and could presumably be purchased or sold.

Maturity Date. The specified day on which the issuer of a debt security is obligated to repay the principal amount, or face value of, a security.

Money Market Mutual Fund. Mutual funds that invest solely in money market instruments (short-term debt instruments, such as Treasury bills, commercial paper, bankers' acceptances, repos and federal funds).

Mutual Fund. An investment company that pools money and can invest in a variety of securities, including fixed-income securities and money market instruments. Mutual funds are regulated by the Investment Company Act of 1940 and must abide by the following Securities and Exchange Commission (SEC) disclosure guidelines.

Negotiable. Salable.

Par. Face value or principal value of a bond, typically $1,000 per bond.

Passive investment management. An investment strategy where securities are bought with the

intention of holding them to maturity or investments in benchmark products designed to yield a market rate of return.

Principal. The face amount or par value of a debt instrument.

Primary Dealer. A small group of large banks and brokers that have pledged to make a market for any Treasury securities at any time. The are required to report their inventory positions and volume of activities to the Federal Reserve. Because of this, they are given the right to deal directly with the Federal Reserve in their daily operations.

Prudent Investor Standard. A standard of conduct where a person acts with care, skill, prudence, and diligence when investing, reinvesting, purchasing, acquiring, exchanging, selling and managing funds. The test of whether the standard is being met is if a prudent person acting in a similar situation would engage in similar conduct to ensure that investments safeguard principal and maintain liquidity.

Rate of return. The amount of income received from an investment, expressed as a percentage. A *market rate of return* is the yield that an investor can expect to receive in the current interest-rate environment utilizing a buy-and-hold to maturity investment strategy.

Public Securities Association. The bond market trade association, which publishes a Master Repurchase Agreement that is widely accepted as the industry standard.

Rating. Judgment of creditworthiness of an issuer made by an accepted rating service.

Repurchase Agreement (Repo). A form of secured, short-term borrowing in which a security is sold with a simultaneous agreement to buy it back from the purchaser at a future date. A *master repurchase agreement* is a written contract governing all future transactions between the parties and seeks to establish each party's rights in the transaction.

Reverse Repurchase Agreement. A form of secured, short-term investment in which a security is purchased with a simultaneous agreement to sell it back to the seller at a future date.

Safekeeping. A procedure where securities are held by a third party acting as custodian for a fee.

Secondary Market. Markets for the purchase and sale of any previously issued financial instrument. The first sale of a financial instrument by the original issuer is said to be done a primary market. All subsequent trades are said to be secondary market.

Securities Investors Protection Corporation (SIPC). A private corporation providing insurance to brokerage firms to cover customer accounts up to $500,000 in securities which includes a $250,000 for cash.

Swap. The trading of one asset, or cash flows, for another. Sometimes used in active portfolio management to increase investment returns by "swapping" one type of security for another. Also used to manage risk; for example, swapping fixed interest rate payments for floating rate payments.

Total return. Interest income paid on the invested principal, plus interest income earned from the successive reinvestment of that interest income, plus projected capital gains (or minus losses) on the investment. Differs from yield to maturity because (1) it can include gains or losses from sales prior to maturity, and (2) it permits the assumption of a reinvestment rate different from the yield earned on the underlying principal.

Treasury Bills. Short-term U.S. government non-interest bearing debt securities with maturities of no longer than one year. The yields on these bills are monitored closely in the money markets for signs of interest rate trends.

Treasury Notes. Intermediate U.S. government debt securities with maturities of one to 10 years.

Treasury Bonds. Long-term U.S. government debt securities with maturities of ten years or longer.

Uniform Net Capital Rule. Securities and Exchange Commission 15C3-1 outlining capital requirements for brokers.

Weighted Average Maturity (WAM). The average maturity of all the securities that comprise a portfolio.

Yield. Loosely refers to the annual return on an investment expressed as a percentage on an annual basis. For interest-bearing securities, the yield is a function of the rate, the purchase price, the income that can be earned from the reinvestment of income received prior to maturity, call or sale and the time from purchase to maturity, call or sale. Different formulas or methods are used to calculate yield. See Yield to Maturity and Total Return Analysis.

Yield-to-maturity. The rate of return yielded by a debt security held to maturity when both the interest payments and the investor's potential capital gain or loss are included in the calculation of the return.

Orange County Fire Authority

AGENDA STAFF REPORT

Board of Directors Meeting
November 17, 2016

Agenda Item No. 5A
Discussion Calendar

Approval of Memorandum of Understanding
Orange County Fire Authority Managers' Association

Contact(s) for Further Information

Lori Zeller, Assistant Chief lorizeller@ocfa.org 714.573.6020
Business Services Department

Summary

This item is submitted for approval of language clean-up and creation of the first Memorandum of Understanding (MOU) for the Orange County Fire Authority Managers' Associations (OCFAMA). This newly created MOU contains no new economic terms; all economic terms were previously approved and have now been removed from the Personnel & Salary Resolution (P&SR) to create this new MOU.

Prior Board/Committee Action

On June 25, 2015, the Board of Directors approved amendments (including economic terms) to the P&SR between the Orange County Fire Authority and the OCFAMA, for a term of June 25, 2015, to June 24, 2018. The Board also authorized staff and the labor negotiator to continue working with the OCFAMA on the language clean-up required to migrate applicable portions of the P&SR to an inaugural MOU for the newly formed bargaining unit.

RECOMMENDED ACTION(S)

Approve the inaugural Memorandum of Understanding between the Orange County Fire Authority and the Orange County Fire Authority Managers' Association for the term of June 25, 2015, to June 24, 2018, and approve the associated amendments to the Personnel & Salary Resolution.

Impact to Cities/County

Not applicable.

Fiscal Impact

Not applicable.

Background

When the economic terms covering the period of June 25, 2015, to June 24, 2018, were negotiated with the OCFAMA and approved by the Board of Directors, the bargaining unit had just recently organized into an Association, and its terms of employment were documented in OCFA's P&SR rather than an MOU. Therefore, the terms agreed to through those 2015 negotiations were initially reflected as amendments to the P&SR. Staff then continued to work with OCFAMA to develop the unit's first MOU. All applicable terms previously agreed to in the P&SR have now been moved to the proposed MOU, and staff also used this opportunity to clean-up the language and create a simplified MOU.

Attachment(s)

1. Proposed Memorandum of Understanding between the Orange County Fire Authority and the OCFAMA for the term of June 25, 2015, to June 24, 2018. (The attachment has been posted on OCFA's website in compliance with the Board's seven day posting requirement for labor documents and is also on file in the Office of the Clerk.)

2. Proposed redlined version of the P&SR (The attachment has been posted on OCFA's website in compliance with the Board's seven day posting requirement for labor documents and is also on file in the Office of the Clerk.)

MEMORANDUM OF UNDERSTANDING

2015–2018

BETWEEN THE

ORANGE COUNTY FIRE AUTHORITY

AND

ORANGE COUNTY FIRE AUTHORITY MANAGEMENT ASSOCIATION

This is a consolidated Memorandum of Understanding that sets forth the terms of agreement reached between the Orange County Fire Authority and the Orange County Fire Authority Management Association for the period beginning June 25, 2015 through June 24, 2018. All economic provisions go into effect either on the date specifically provided for in this MOU or on the first date of the pay period following Board approval if not specifically addressed.

TABLE OF CONTENTS

		Page
ARTICLE I	**GENERAL PROVISIONS**	**4**
Section 1.	Term	4
Section 2.	Recognition	4
Section 3.	Severance	4
ARTICLE II	**COMPENSATION**	**5**
Section 1.	Establishment of Base Salary and Base Salary Adjustments	5
Section 2.	Establishment of Base Salary for New Employees	6
Section 3.	Base Salary on Promotion	6
Section 4.	Base Salary on Reassignment	6
Section 5.	Base Salary on Reclassification	7
Section 6.	Base Salary on Reemployment	7
Section 7.	Working Out of Class	7
Section 8.	Annual Merit Review Program	8
Section 9.	Bilingual Pay	9
Section 10.	Deferred Compensation	9
Section 11.	Work Schedules	10
ARTICLE III	**BENEFITS**	**11**
Section 1.	Retirement	11
Section 2.	Insurances	13
ARTICLE IV	**REIMBURSEMENT PROGRAMS**	**20**
Section 1.	Mileage Reimbursement	20
Section 2.	Personal Property Reimbursement	20
Section 3.	Tuition Reimbursement	20
ARTICLE V	**LEAVES OF ABSENCE**	**22**
Section 1.	Sick Leave	22
Section 2.	Vacation	24
Section 3.	Holidays	26
Section 4.	Bereavement Leave	28
Section 5.	Authorized Leave Without Pay	28
Section 6.	Jury Duty Leave	30
Section 7.	Witness Leave	30
Section 8.	Workers' Compensation Leave	30
Section 9.	Catastrophic Leave	31
Section 10.	Paid Annual Leave	32
ARTICLE VI	**EMPLOYEE/EMPLOYER RELATIONS**	**34**
Section 1.	Discipline	34
Section 2.	Grievance Procedure	39
Section 3.	Layoffs	43
Section 4.	Probationary Period	43
Section 5.	Performance Evaluations	45

Section 6. Personnel Files 45
Section 7. Association Rights 46

APPENDIX A ADMINISTRATIVE MANAGEMENT CLASSIFICATIONS..... 47

APPENDIX B SALARY SCHEDULE 48

ARTICLE I

GENERAL PROVISIONS

Section 1. Term

The provisions of this Memorandum of Understanding ("MOU") shall commence on June 25, 2015, unless another implementation date is specified within the MOU, and shall expire on June 24, 2018.

Section 2. Recognition

The Orange County Fire Authority Board of Directors ("Board") hereby recognizes the Orange County Fire Authority Management Association (hereinafter "Association" or "OCFAMA") as the exclusive representative of the employees in the unit of managers in employee classifications listed in Appendix A to this MOU.

Section 3. Severance

In the event that any provision of this MOU is declared invalid by a court, the parties agree that all other provisions not declared invalid shall remain in full force and effect.

ARTICLE II

COMPENSATION

Section 1. Establishment of Base Salary and Base Salary Adjustments

A. The base salaries for employees in the unit are set forth in the salary schedule of this MOU which is included as Appendix B of this MOU.

B. Compensation Increases

1. Effective July 10, 2015, employees shall receive a five percent (5%) base salary increase.

2. Effective on January 8, 2016, employees shall receive a two percent (2%) base salary increase.

3. Effective on January 6, 2017, employees shall receive a one and ninety five one hundredths percent (1.95%) base salary increase.

C. Employees shall receive compensation on a salary basis at a biweekly rate within the range and step assigned to the class in which they are employed.

D. The Fire Chief may, in those instances where he/she determines that it is in the best interest of the Authority, approve additional individual salary increases, provided that the amount, when added to any other increase, shall not exceed fifteen percent (15%); however, no such increase shall cause an employee's salary to exceed the maximum of the applicable salary range.

E. If any employee is required to work an unusually large number of hours as a result of natural disasters and/or officially declared emergencies, such as floods, fires, storm conditions, high tides, etc., or due to extraordinary circumstances such as special projects, excessive call backs, etc., the Fire Chief any Assistant Chief or Department Head may authorize additional compensation for such an employee or group of employees whom the Fire Chief, any Assistant Chief or Department Head determines should receive additional compensation. The rate of such compensation shall be equal to one-eightieth (1/80) of the employee's regular biweekly pay rate for the hours in excess of eighty (80) hours in a pay period. The Fire Chief, any Assistant Chief or Director may also authorize Management Administrative Leave (MAL) for members of the OCFAMA bargaining unit in lieu of compensation provided within this paragraph. MAL will not have cash value and cannot be cashed out (as permitted per agreement by Labor Code section 227.3) at any time including at the end of employment. MAL can be used just like vacation by making a request to use it with each employee’s supervisor.

F. No employee's base salary shall exceed the maximum of the salary range, except pursuant to the Y-Rate provisions in Article II, Section 5 of this MOU.

G. No employee's salary shall be less than the minimum rate in the range assigned to the class in which he/she is employed.

Section 2. <u>Establishment of Base Salary for New Employees</u>

A. The Human Resources Director may authorize the appointment of employees at any rate up to the middle of the salary range. Such appointment may be made only when, at the discretion of the Human Resources Director, there is a direct and measurable benefit to the Authority for such appointment.

B. The Fire Chief may authorize the appointment of employees at any rate within the salary range. Such appointment may be made only when, at the discretion of the Fire Chief, there is a direct and measurable benefit to the Authority for such appointment.

Section 3. <u>Base Salary on Promotion</u>

A. Except as provided by Sections B and C of this Section, an employee promoted to a position in a class with a higher salary range shall receive the higher of the following rates:

   1. The recruiting rate for the higher class; or

   2. A five and one half percent (5.5%) increase over the salary received prior to promotion.

B. Any employee who is promoted to a class from which the employee was previously reduced without a salary decrease shall be placed at a salary rate no higher than the rate that the employee would have achieved if the employee had remained in the class to which he/she is promoted and had demonstrated at least standard performance.

C. Notwithstanding paragraph A of this Section, an employee who is promoted may receive a salary increase of up to fifteen percent (15%) if authorized by the Fire Chief upon recommendation of the Human Resources Director.

Section 4. <u>Base Salary on Reassignment</u>

A. When an employee is reassigned from one class to another class with the same recruiting rate, the employee's salary shall not change.

B. When an employee is reassigned from one class to another class with the same salary range, but a higher recruiting rate, the employee's salary shall be advanced the percentage difference between recruiting rates.

C. When an employee is reassigned from one class to another class with the same salary range, but a lower recruiting rate, the employee's salary shall not change.

   1. When a probationary employee is reassigned from one class to another class with the same salary range, but a lower recruiting rate, the employee shall have the rate

status and probation status that the employee would have achieved if the employee had been in the new class throughout the period of his/her service in the initial class.

D. When an employee is involved in a series of reassignments among classes with different recruiting rates, the employee's salary shall be determined by the Human Resources Director.

E. If a class is reassigned to a higher salary range, the Board, or where appropriate, the Fire Chief, shall determine the salary adjustment, if any, each employee in the class shall receive. Such adjustment shall not exceed a fifteen percent (15%) increase, provided that the employee's salary in shall not fall below first step of the new salary range. In no case shall the employee's salary fall below his/her salary received before the reassignment of the class to the higher salary range.

Section 5. <u>Base Salary on Reclassification</u>

The base salary of an employee whose position is reclassified shall be determined as follows:

A. If the position is reclassified to a class with the same salary range, the base salary of the employee shall remain the same as in the former class.

B. If the position is reclassified to a class with a higher salary range, the salary of the employee shall be increased to the higher range or at the discretion of the Human Resources Director, the salary of the employee shall not be changed.

C. If the position is reclassified to a class with a lower salary range, the salary of the employee shall be "Y-rated" and thus maintained and not increased until the employee's base salary in the reclassified into position exceeds the employee's previous compensation. "Y-rate" shall mean a pay outside of the assigned salary range of a class.

Section 6. <u>Base Salary on Reemployment</u>

A. A person who is reemployed in the bargaining unit who was a non-probationary employee when he/she left employment at the Authority may, upon approval of the Human Resources Director, be appointed at a rate higher than the recruiting rate, but no higher than the rate the person occupied at the time of separation.

B. A retiree of the Authority may be reemployed for the maximum allowable time under the law and may be appointed to the position at any rate on the salary range.

Section 7. <u>Working Out of Class</u>

Notwithstanding anything in this MOU to the contrary, when in the judgment of the Authority it becomes necessary or desirable to utilize the services of employees in capacities other than those for which they are regularly employed, the Authority may authorize and, if appropriate, fix an additional rate of compensation for such employees.

Section 8. Annual Merit Review Program

A. The Annual Merit Review Program establishes the award of performance salary increases to eligible employees. The Annual Merit Review Program shall be administered as follows:

1. The annual performance rating period shall be August 1 through July 31.

2. Employees may be rated "Substandard," "Standard," or "Above Standard."

3. Performance salary increases shall be awarded as follows:

Rating	Performance Salary Increase
Substandard	None
Standard	2.75% increase not to exceed the top of the salary range
Above Standard	5.5% increase not to exceed the top of the salary range

4. Performance salary increases shall be effective on the first day of the first pay period that includes September 1, regardless of the date the reviews are completed. The following dates reflect the effective pay period as described in this provision:

Performance Salary Increase Effective Date	Pay Period #
August 21, 2015	19
August 19, 2016	18
September 1, 2017	19

5. Performance salary increases within a range shall not be automatic. They shall be based upon job performance and granted only upon the affirmative recommendation of the employee's supervisor with the approval of the next level supervisor.

B. Eligibility for Annual Merit Review Program

1. Except as provided in B.2. below, all employees are eligible to receive performance salary increases through the Annual Merit Review Program.

2. An employee hired or promoted into a classification in this unit on or after March 1 shall not be eligible to receive a performance salary increase during his/her first performance rating year period of employment or promotion. Such employees shall be eligible for performance salary increases the next subsequent performance rating year period.

3. Part-time employees shall be eligible for performance salary increases upon

completion of two thousand eighty (2080) hours of employment. Performance salary increases shall be effective the first day of the pay period following the completion of said period.

Section 9. <u>Bilingual Pay</u>

A. Employees who are eligible for bilingual pay as set forth below, shall receive an additional thirty (30) cents per hour (approximately fifty-two dollars ($52) per month) for all hours actually paid.

   1. An employee must be conversant in one (1) of the pre-designated languages to qualify to receive bilingual pay:

      - Spanish
      - Vietnamese
      - Korean
      - American Sign Language

   2. Other languages may qualify on a case-by-case basis.

   3. The employees must be approved by the Human Resources Director per AM SOP 103.02.

B. An employee shall not be eligible to receive more than one (1) type of bilingual pay concurrently.

C. Bilingual pay shall apply to workers' compensation and be considered as part of the employee's base pay for the earnings of other benefits as provided by law.

D. A bilingual employee may be called upon to speak or translate a second language at any time, as Authority needs dictate.

E. An employee in a bilingual assignment may request assignment to a position that does not require bilingual certification. The request shall be made in writing to the Fire Chief who shall consider it according to:

   1. Authority need,
   2. Availability of a qualified replacement; and
   3. Availability of another suitable assignment for the requesting employees.

Section 10. <u>Deferred Compensation</u>

An employee may, at his/her request, participate in the Authority's Deferred Compensation Plan. This plan is 100% employee funded.

Section 11. <u>Work Schedules</u>

A. Employees may be assigned to one of the following standard work schedules:

1. 9/80 – that consists of eight (8), 9-hour (nine hour) workdays and one (1) 8-hour (eight hour) hour workday in the two-week pay period. The work schedule shall include two consecutive calendar days off in the workweek during which the employee works the eight hour alternating regular day off and three consecutive calendar days off in the workweek during which the employee's alternating regular day off is an off day. For this work schedule, each employee's FLSA work week shall end exactly four hours after the start time of the employee's Friday shift.

2. 5/40 – that consists of five (5) 8-hour (eight-hour) workdays in a workweek. Each workweek shall contain two (2) consecutive calendar days off work. The employee's FLSA workweek shall begin at 12:00 a.m. on Sunday and shall end the following Saturday at 11:59 p.m.

3. 4/10 – that consists of four (4) 10-hour (ten-hour) workdays in a workweek. Each workweek shall contain three (3) consecutive calendar days off work. The employee's FLSA workweek shall begin at 12:00 a.m. on Sunday and shall end the following Saturday at 11:59 p.m.

B. The Authority reserves the right to implement other alternate work schedules in emergencies or to authorize alternate work schedules requested by OCFAMA, if the needs of the operation would be better served. The Authority shall discuss with the OCFAMA any proposed changes in work hours or existing work schedules before such changes are put into effect. Whenever practicable, the Authority shall provide written notification of such proposed changes to the OCFAMA at least fourteen (14) calendar days before such changes are put into effect.

C. As employees who are exempt from overtime, employees in this unit may be provided with the ability to flex their work hours within a workweek. For example, an employee may work 12 hours in one day and may be permitted to work fewer hours in another day during the workweek.

ARTICLE III

BENEFITS

Section 1. Retirement

A. Eligibility

Eligible employees in the Unit are included in the Orange County Employees Retirement System (OCERS) as determined by their date of entry into eligible service.

B. Employer's Contribution

For employees hired before January 1, 2013 and for employees hired on or After January 1, 2013 who are considered "Legacy Members" of OCERS within the Meaning of the Public Employees' Pension Reform Act of 2013 (PEPRA): The Authority will pay the amount of the employee's share of retirement contribution that is not paid by the employee per Section F of this Section pursuant to Government code 31581.2.

C. Final Compensation for Legacy Members of OCERS

"Final Compensation" for Legacy Members of OCERS, in accordance with Government Code section 31462(a) "Final compensation" means the average annual compensation earnable by a member during any three years elected by a member at or before the time he or she files an application for retirement, or, if he or she fails to elect, during the three years immediately preceding his or her retirement. If a member has less than three years of service, his or her final compensation shall be determined by dividing his or her total compensation by the number of months of service credited to him or her and multiplying by 12.

D. Cost of Living Adjustments

Members' normal cost-of-living contributions shall be adjusted subsequent to and in accordance with actuarial recommendations adopted by the Board of Retirement and the Authority Board.

E. Retirement Formulas and Employee Contributions

1. Employees Hired Prior to December 1, 2012

   a. Retirement Formula: These employees receive the 2.7% at age 55 formula in accordance with Government code section 31676.19.

   b. Employee Contribution: Effective July 10, 2015, employees shall pay up to twelve and one quarter percent (12.25%) but no higher than their maximum employee contribution (based on age of entry into OCERS) if their maximum employee contribution is lower than twelve and one quarter percent (12.25%).

Effective January 8, 2016, employees shall pay up to fourteen and one quarter percent (14.25%) but no higher than their maximum employee contribution (based on age of entry into OCERS) if their maximum employee contribution is lower than fourteen and one quarter percent (14.25%).

Effective January 6, 2017, employees shall pay up to sixteen and one half percent (16.5%) but no higher than their maximum employee contribution (based on age of entry into OCERS) if their maximum employee contribution is lower than sixteen and one half percent (16.5%).

At any time beyond July 1, 2017, if there are increases to the maximum employee contribution to OCERS, employees will pay their maximum employee contribution based on age of entry into OCERS.

.

2. Employees Hired by Authority From December 1, 2012 Through December 31, 2012 or Employees Hired On or After January 1, 2013 With Reciprocal Retirement Benefits

   a. Retirement Formula: These employees receive the 2% at age 55 formula in accordance with Government Code Section 31676.16.

   b. Employee Contribution: Effective July 10, 2015, employees shall pay up to twelve and one quarter percent (12.25%) but no higher than their maximum employee contribution (based on age of entry into OCERS) if their maximum employee contribution is lower than twelve and one quarter percent (12.25%).

      Effective January 8, 2016, employees shall pay up to fourteen and one quarter percent (14.25%) but no higher than their maximum employee contribution (based on age of entry into OCERS) if their maximum employee contribution is lower than fourteen and three one percent (14.25%).

      Effective January 6, 2017, employees shall pay up to sixteen and one half percent (16.5%) but no higher than their maximum employee contribution (based on age of entry into OCERS) if their maximum employee contribution is lower than sixteen and one half percent (16.5%).

      At any time beyond July 1, 2017, if there are increases to the maximum employee contribution to OCERS, employees will pay their maximum employee contribution based on age of entry into OCERS.

3. Employees Hired by Authority On or After January 1, 2013 With No Reciprocal Benefits

   a. The retirement formula will be the 2.5% at age 67 retirement formula per Government Code Section 7522.20(a), utilizing the average three highest years of compensation per Government Code section 7522.32. Pensionable compensation and other pension related conditions are governed by the provisions of PEPRA and the OCERS Board of Retirement.

b. Employee Contribution: Such employees shall pay one half the normal cost as defined by the PEPRA.

F. Employer's Contribution: Until all of the employees in the unit are paying 100% of their member contribution as described in paragraph E above, the Authority shall continue to pay the employee's remaining retirement contribution (i.e., the amount between the employee's agreed upon amount and their total member contribution) pursuant to Government Code 31581.2 independent of the retirement formula benefit set forth herein.

Section 2. <u>Insurances</u>

A. CalPERS Health Care

1. The Authority provides health insurance benefits to employees through the California Public Employees' Retirement System (CalPERS) through the Public Employees' Medical and Hospital Care Act. (PEMHCA).

2. The Authority shall contribute towards the payment of health care premiums on behalf of each eligible active employee and each eligible retiree, an equal contribution as set forth in California Government Code 22892 of the PEMHCA. That amount is equal to the PEMHCA statutory minimum which is $122 for 2015, $125 for 2016, and a yet undetermined amount for years following 2016.

3. The Authority shall provide a Section 125 Cafeteria Plan for active eligible employees and pay the following amounts for employees' health care coverage and other benefits:

   a. For 2015, employees shall receive a monthly cash allotment in the amount of one thousand five hundred and sixty nine dollars and ninety five cents ($1,569.95). This amount shall be adjusted annually each January in the amount equal to the average percentage increase of the CalPERS Health Plans for that year. The average percentage increase shall be computed by averaging the increase in the CalPERS Health Plans in which the employees are eligible to participate, with the exclusion of the Plan with the highest premium.

   These amounts are inclusive of the PEMHCA statutory minimum amount described above. The employee may elect to contribute the entire value to his/her health care premium or allocate a portion of the value to other benefits offered under the Cafeteria Plan. If the employee elects to allocate part of the value to other benefits, any unpaid balance of the employee's health care premium shall be deducted from the employee's paycheck.

B. Health Plan Enrollment

1. Newly hired eligible employees must enroll for coverage in health plans within the first sixty (60) days of employment. If the employee fails to enroll within the first 60

days of employment, he/she must either wait until the next open enrollment period or 90 days after submission of a late enrollment form. Health plan coverage shall become effective the first day of the month following submission to the Authority of the Health Benefits Enrollment form.

2. Employees who are terminated due to disciplinary action or reduction in force, or who voluntarily resign from employment, may continue their health care coverage until the end of the month following the month in which the employee is terminated. However, the Authority's contribution towards the employee's health care coverage the month following termination shall be in accordance with California Government Code Section 22892.

3. An employee shall be given the opportunity to enroll in a medical plan or to change medical plans on the effective date of his/her retirement.

4. In all health plans, the Authority shall provide a minimum one (1) month period, each fiscal year, for open enrollment of employees and employees' dependents.

5. Two (2) full-time employees married to each other who elect coverage in the same health plan shall be enrolled as employee and dependent. Such employees shall have the full cost of coverage for employee and dependents paid by the Authority.

6. The Authority may re-open negotiations on the subject of the Affordable Care Act or its impacts.

C. Other Insurance Coverage

1. The Authority shall provide the following to all full-time employees:

   a. Short-term disability insurance coverage, at no cost to the employee, after sick leave is exhausted, sixty (60) percent of salary per month for up to one (1) year for certified non-occupational injury or illness in accordance with the plan benefits schedule. Coverage shall also provide for continuation of the Authority's share of premiums for health, dental, and life insurance benefits while the employee is on Official Leave for Non-occupational Disability for up to one (1) year from the effective date of disability.

   b. Long-term disability insurance coverage, at no cost to the employee, to provide up to sixty (60) percent of salary per month in accordance with the plan benefits schedule.

   c. Life insurance and accidental death and dismemberment insurance, at no cost to the employee, shall be provided at amounts based upon the employee's annual base salary, rounded to the next closest ten thousand (10,000) dollars and adjusted annually on each January 1, if required. Employees shall have the option to purchase additional life and accidental death and dismemberment coverage, including dependent coverage.

   d. Dental and orthodontia insurance coverage, at no cost to the employee, for the

employee and dependents. Part-time employees shall have the option of purchasing dental insurance for the employee and his/her dependents by paying one-half (½) the monthly rate paid by the Authority for full-time employees, provided the employee's normal workweek consists of at least twenty (20) hours.

e. Vision care insurance coverage, at no cost to the employee, for the employee and dependents.

D. Premium Only Plan

1. The Authority shall administer a Premium Only Plan (POP) that shall allow an employee to pay for health insurance premiums as permitted in the Internal Revenue Code. Under the POP, an employee's gross taxable salary shall be reduced by the amount of his/her share of the premium costs of Authority-provided health insurance coverage.

E. Retiree Medical Insurance Grant ("Defined Benefit Plan")

1. Retiree Medical Insurance Grant

a. The Authority shall administer a Retiree Medical Insurance Grant plan, which will also be referred to herein as a "defined benefit plan" for employees who have retired or terminated from Authority service and who meet the eligibility requirements set forth in paragraph E.2, of this Section.

b. Upon paid Authority retirement, an eligible retiree who has enrolled in a "qualified health plan" (as defined in the Plan) or in Medicare as stated in the Plan and required by the "qualified health plan," shall receive a Retiree Medical Insurance Grant.

c. An eligible former employee who terminated from Authority service prior to retirement, who is 55 years of age or older and who is enrolled in a recognized health plan or Medicare as stated in the Plan and required by the "recognized health plan," shall receive a Retiree Medical Insurance Grant.

d. The Retiree Medical Insurance Grant may be applied only towards the cost of retiree and dependent coverage in a "qualified health plan", as reimbursement for a portion of the cost of eligible former employee and dependent coverage in a recognized health plan and/or Medicare premiums as provided in Sections E.1.d.i, E.1.d.ii, and E.1.d.iii of this Section.

i. Effective January 1, 2015, the Retiree Medical Insurance Grant shall be an amount based on twenty three dollars and seventeen cents ($23.17) per month for each full year of service to a maximum of five hundred fifty one dollars and seventy-five ($551.75)) cents per month. On January 1 of each calendar year the amount of such Retiree Medical Insurance Grant shall be adjusted by the average percentage increase in Authority health plan premiums no later than the effective dates of such increase, not to exceed five (5) percent per year. In no case shall the Retiree Medical Insurance

Grant exceed the actual cost of the health insurance and/or Medicare premiums.

ii. All employees who retire from the Authority and become eligible for a Retiree Medical Insurance Grant shall be provided a one (1) time opportunity of at least thirty (30) days to enroll in an Authority "qualified health plan," and shall have ninety (90) days after attaining age sixty-five (65) to enroll in Medicare. Should a retiree fail to enroll in either a "qualified health plan" or Medicare during the aforementioned periods or should he/she terminate coverage or fail to make necessary payments, the retiree and dependents shall forfeit any right to a Retiree Medical Insurance Grant.

iii. All former employees who did not retire from the Authority and who are eligible for a Retiree Medical Insurance Grant shall not receive the Grant until such employees reach age 55 and request the Authority to commence distribution of the Grant no later than 90 days from the former employee's 55th birthday. Upon such request, the eligible former employees must show proof of enrollment in a recognized health plan. A reimbursement for a portion of the cost of premiums will be provided to the eligible former employees in accordance with the Retiree Medical Plan provisions. The eligible former employees will be required to provide the Authority with a copy of the premium bill and cancelled check or other recognized proof of payment for reimbursement.

2. Eligibility Requirements for Retiree Medical Insurance Grant

a. Retirees must be actively retired from the Authority and receiving a monthly retirement allowance from the Orange County Employees Retirement System (OCERS). An eligible former employee must be at least age 55 and enrolled in a recognized health plan.

b. Only employees hired before January 1, 2007 shall be eligible to participate in the Retiree Medical Insurance Grant Plan.

c. A retiree or eligible former employee must have retired or terminated employment with the Authority with at least one (1) year of service (2080 hours), except as provided in Sections E.2.c.i, ii, and iii of this Section.

i. A retiree of the Authority who receives a service-connected disability retirement from OCERS shall be eligible for a Retiree Medical Insurance Grant equal to either ten (10) years of service or actual years of service, whichever is greater.

ii. A retiree who receives a non-service connected disability retirement shall be eligible for a Retiree Medical Insurance Grant based on actual years of service.

iii. A separated employee who is less than 55 years of age or is under normal retirement age who has requested a service or non-service connected

disability retirement shall not be eligible to receive the Retiree Medical Insurance Grant until a determination of disability status is made by the Board of Retirement.

d. All eligible retirees, eligible former employees and enrolled dependents who are age sixty-five (65) or older must be enrolled in Medicare Part B in order to be eligible for the Retiree Medical Insurance Grant. All eligible retirees, eligible former employees and dependents who are entitled to Medicare Part A coverage without a premium must be enrolled in Medicare Part A to be eligible to receive the Retiree Medical Insurance Grant.

e. Deferred Retirement

   i. An employee who, upon separation from the Authority, is eligible for paid retirement and elects deferred retirement must defer participation in the Retiree Medical Insurance Grant until such time as he/she becomes an active retiree. However, in order to be eligible for health care coverage provided by CalPERS, retirement must not be deferred for more than one hundred twenty (120) days after the employee separates from Authority Service.

   ii. An employee with at least one (1) year of service (2080 hours), who is not eligible for paid retirement at the time he/she separates from Authority service and elects deferred retirement status shall not become eligible for participation in the Retiree Medical Insurance Grant until he/she becomes 55 years of age.

f. For purposes of this section, a full year of service shall mean those regular hours of Service the employee worked as a regular, limited-term and/or probationary employee. Two thousand eighty (2080) regular hours, exclusive of overtime, shall equal one (1) full year of service.

3. Employee Contribution

   a. All employees hired before January 1, 2007 shall contribute four (4%) percent of their base salary, exclusive of overtime and specialty pay, through payroll deduction to the Authority to be applied to the Plan.

4. Survivor Benefits

   a. A surviving dependent who qualifies for a monthly retirement allowance shall be eligible for fifty percent (50%) of the Retiree Medical Insurance Grant authorized for the retiree.

   b. A surviving eligible retiree or eligible former employee who qualifies for a monthly retirement allowance and who was married to a retiree or eligible former employee who was also eligible for a Retiree Medical Insurance Grant shall receive the survivor benefit described in Section E.5.a of this Section, or his/her own Retiree Medical Insurance Grant, whichever is greater. Such

retiree shall not be eligible for both Retiree Medical Insurance Grants.

5. Agreement to Reopen Labor Negotiations Re: the Retiree Medical Grant

    a. The OCFA and the OCFAMA have agreed that either may reopen labor negotiations (during the term of their MOU – June 25, 2015 to June 24, 2018) on the topic of retiree medical grant if the subject is being discussed with any other bargaining unit at the OCFA.

F. Defined Contribution Retiree Medical Plan

1. The Authority will provide employees hired on or after January 1, 2007 a "defined contribution" plan.

2. These employees are required to contribute four percent (4%) of base salary exclusive of overtime and specialty pay to this plan.

3. Employees hired before January 1, 2007 shall not be eligible to participate in this plan. Eligibility for plan participation is based on the employee's most recent date of hire with the Authority.

G. Physical Examination

1. Full-time employees are eligible to receive a voluntary annual physical examination by an Authority designated physician at no cost to the employee.

H. Optional Benefit Plan (OBP)

a. Each eligible employee shall be entitled to select benefits from those listed below at a cost to the Authority not to exceed one thousand nine hundred dollars ($1,900.00) for each calendar year.

b. The purpose of the OBP is to provide options to individual employees to best meet the needs of themselves and dependents while relieving the employee of external influences that might impair his/her performance.

OBP options include the following two (2) benefits categories:

i. Cash (taxable);

ii. Health/accident;

A. Health programs (employee and/or dependents) such as smoking cessation, stress reduction, and physical, mental, and/or emotional health-related counseling for individual and/or family not covered or partially covered through existing plans;

B. Employee's share of Authority health insurance premiums (employee and/or dependents). Also includes payment of Accidental Death and

Dismemberment coverage for employee and dependents available through the Authority;

C. Health care, vision, and/or dental (employee and/or dependents) excluded or partially excluded under the Authority's insurance plans. Examples of items covered under this provision include: deductibles, eye care, lenses, and frames.

iii. To be eligible, each employee must file an Intent to Participate form by December 31st each year and in accordance with provided instructions. For new employee enrollment, the amount available to the employee shall be prorated based on month(s) of eligibility. An employee's designations are irrevocable, unless he/she has a change in family status. Eligible expenses must be incurred during an OBP period in which an employee is eligible and has sufficient fund balance to cover the expense. Claims may be filed at any time during the plan period, and all claims must be filed no later than ninety (90) days following the close of the OBP period. Upon approval and required written authorization, payment shall be made.

iv. Eligibility – an employee is eligible to receive the OBP, provided he/she is continuously employed in a full-time capacity. Employees hired or promoted after the commencement of an OBP shall be eligible for the OBP on a prorated basis the first day of the month following the twenty-eighth day in a position in the unit. Employees working in a job-sharing assignment in a full-time (regular, probationary, or limited-term) position shall be eligible to receive the OBP in proportion to each employee's regularly scheduled hours.

v. Any portion of the optional benefit not incurred within the OBP period shall remain Authority funds.

vi. Claims shall be made on forms authorized by the Human Resources Director on which claimant declares the category of service received as defined in the OBP, the dates the expenses were incurred by the claimant or eligible dependents, by whom service was provided, and the amount being claimed. Claims shall be paid when submitted with a declaration under penalty of perjury signed by the claimant and approved. Only those claims that are accompanied by documentation that an eligible expense has been incurred during the OBP period shall be approved.

ARTICLE IV

REIMBURSEMENT PROGRAMS

Section 1. Mileage Reimbursement

A. Subject to the current vehicle rules and regulations established by the Board, an employee who is authorized by the Fire Chief to use a private automobile in the performance of his/her duties shall be paid for each mile driven in the performance of his/her duties during each monthly period as provided below:

1. The reimbursement rate shall be the Internal Revenue Service Standard Mileage Rate for the Business Use of a Car.

B. An employee who is required by the Authority to furnish a privately owned vehicle for the performance of his/her duties on Authority time shall receive a minimum of ten (10) dollars in any month in which the actual mileage reimbursement would otherwise be less than ten (10) dollars. The minimum shall not apply in any month:

1. In which the employee has not actually worked eighty (80) hours;

2. Unless the employee claims the ten (10) dollar minimum and the Authority certifies that the employee was required to use a privately owned vehicle on Authority business.

Section 2. Personal Property Reimbursement

A. Employees shall, in proper cases, be reimbursed for the repair or replacement of personal property damaged in the line of duty without fault of the employee. The amount of reimbursement for articles of clothing shall be the depreciated value based on the age and condition of the article. The amount of reimbursement for other personal property covered by this provision shall be the actual replacement or repair value, whichever is lower, except that the reimbursement on a watch shall not exceed its functional value and the limit on eyeglasses shall be the cost of lenses, plus the cost of basic frames.

Section 3. Tuition Reimbursement

A. The tuition reimbursement program in this unit is designed to:

3. Enhance professional job skills; and

4. Encourage ongoing professional development.

B. Eligibility of courses shall be generally based on the provisions of Part 1, Article III, Section 2 of the Personnel and Salary Resolution. Approval for other courses such as certificate programs, seminars, and workshops shall be subject to the approval of the requesting employee's Executive Manager.

C. For approved college or other approved graded courses, reimbursement shall require a minimum final grade of “C” or better for undergraduate courses and a minimum final grade of “B” or better for graduate courses. For courses that are not graded, reimbursement shall require proof of successful completion. No reimbursement shall be made for audited or incomplete courses.

D. Reimbursement from the Authority shall not exceed two thousand (2000) dollars in any fiscal year and shall apply to tuition, registration, lab fees, books, and approved related expenses; and shall be processed according to the Authority’s tuition reimbursement process.

E. Reimbursement received from other sources for expenses covered in this Section shall be deducted before the Authority provides tuition reimbursement.

ARTICLE V

LEAVES OF ABSENCE

Section 1. Sick Leave

A. Accumulation of Sick Leave – shall be in accordance with the following schedule:

HOURS OF CONTINUOUS SERVICE EXCLUSIVE OF OVERTIME	HOURLY ACCRUAL RATE
1 through 6,240.00 regularly scheduled hours	0.0347 hours for each regularly scheduled work hour paid
6,240.01 or more regularly scheduled hours	0.0462 hours for each regularly scheduled work hour paid

B. When determined to be in the best interest of the Authority, the Fire Chief may approve up to forty (40) hours of sick leave be advanced to a newly appointed employee. If that occurs, the employee will not accrue sick leave until such time as the forty (40) hours would have been earned. At that time, sick leave accrual will resume at the rate specified in paragraph A of this Section.

C. Sick Leave Earned – shall be added to the employee's sick leave accumulation account upon the completion of the pay period with no credit to be applied during the progress of the pay period or for a portion of the pay period during which the employee terminates Authority service.

D. Extra Help OCFAMA Employees – After thirty (30) calendar days of employment, extra help employees become eligible to earn three (3) days of paid sick leave annually. Extra help employees shall be eligible to apply sick leave to absences beginning on the ninetieth (90th) day of employment. Unused paid sick leave is not carried over from one year to the next. The annual paid sick leave allotment will be credited to the extra help employee's sick leave accumulation account annually on the employee's hire date. When an extra help employee separates employment and is rehired, his/her rehire date will be used to determine when he/she is credited his/her annual paid sick leave allotment.

E. Permitted Uses of Sick Leave

Sick leave may be applied to:

1. An absence necessitated by employee's personal illness, injury, or disability due to pregnancy or childbirth.

2. Medical and dental office appointments when absence during working hours for this purpose is authorized by the employee's supervisor.

3. Absence due to exposure to a contagious disease when quarantine is imposed by health authorities or when it is determined by a physician designated by the Authority that the presence of the employee on duty would endanger the health of others.

4. Absence from duty because the employee's presence is needed to attend to the serious illness of a member of his/her immediate family, provided that such absence shall be limited to a maximum of three (3) working days for each occurrence. For purposes of this Section, immediate family shall mean registered domestic partner, father, father-in-law, mother, mother-in-law, step-parent, brother, sister, wife, husband, child, step-child, grandparent, grandchild, step-grandchild, dependent adult or child for whom the employee is the legal guardian, or as otherwise defined by law.

    a. Extra help employees may also apply sick leave for themselves or an immediate family member for the preventative care or care of an existing health condition or for specified purposes if the employee is a victim of domestic violence, sexual assault, or stalking.

5. In addition to paragraph 4, once each calendar year, an employee is entitled to use one half of his/her annual accrued sick leave for the illness/injury of immediate family, as defined in paragraph 4.

6. Illness while on paid vacation (this does not apply to Authority provided holidays) shall be charged to sick leave rather than vacation only under the following conditions:

    a. The employee must notify his/her supervisor within four (4) calendar days of the beginning of the illness or prior to the end of his/her vacation, whichever is sooner, to request that his/her illness on vacation be charged to sick leave.

    b. The Authority shall be under no obligation to extend the vacation beyond the original scheduled vacation ending date.

    c. Upon the employee's return to work, the employee must furnish the Authority with a certificate signed by a licensed physician, registered nurse, or recognized health care provider stating the period of sickness.

7. Absence from duty because of personal business not to exceed twenty (20) working hours during the fiscal year. This section does not apply to extra help employees.

F. General Provisions

1. In any use of sick leave, an employee's account shall be charged to the nearest quarter hour.

2. An employee may be required to furnish a certificate issued by a licensed physician

or registered nurse or other Authority-approved evidence of illness, injury, or medical or dental office calls when the department has notified the employee in advance of such a requirement or when the employee has been under the care of a physician.

G. Sick Leave Payoff

1. An employee shall receive sick leave payoff as follows:

   a. **Upon Paid Retirement or Death:** An employee or the employee's estate shall be paid for a portion of the employee's unused sick leave in an amount computed as provided below:

Years of Service	Percent of Unused Sick Leave Paid For
Less than 5 years	None
5 but less than 10	25%
10 but less than 15	50%
15 but less than 20	75%
20 or more	100%

   Years of service as used herein shall be the equivalent of full-time continuous service in a regular position. Employees who elect to take deferred retirement shall not be eligible for any benefits provided by this paragraph.

   b. **During Employment:** Not more than once in each fiscal year, an employee who has accumulated unused sick leave in excess of two hundred eighty (280) hours shall, upon request, receive a payoff for up to one-third (1/3) of all his/her accumulated sick leave, provided that the remaining balance is not reduced below two hundred eighty (280) hours. The percentage of sick leave paid shall be computed based on years of continuous service in accordance with Section 1.G.1.a. of this Article. The employee's sick leave balance shall be reduced by the total number of hours elected and approved for payoff by the employee prior to the application of the eligible percentage described in Section 1.G.1.a. of this Article.

   c. **Payment of Sick Leave to Deferred Compensation:** An employee who has given irrevocable written notice of his/her intent to retire at least thirty (30) calendar days prior to the effective date of his/her retirement, may request that the payoff of his/her accumulated sick leave be made to his/her deferred compensation account with the Authority up to the maximum amount permitted by the IRS Code and to the extent permitted under the provisions of Section 1.G.1.a. of this Article. Such payoff shall be made prior to the effective date of employee's retirement.

Section 2. Vacation

A. Accumulation of Vacation

Accumulation of vacation shall be in accordance with the following schedule:

YEARS OF COMPLETED CONTINUOUS SERVICE	EQUIVALENT HOURS OF COMPLETED CONTINUOUS SERVICE	HOURLY ACCRUAL RATE
0 to 3 years	1 through 6,240.00 regularly scheduled hours	0.0577 hours for each regularly scheduled hour paid
After 3 years but less than 10 years	6,240.01 through 20,800.00 regularly scheduled hours	0.077 hours for each regularly scheduled hour paid
After 10 years	20,800.01 or more regularly scheduled hours	0.0962 hours for each regularly scheduled hour paid

When it is determined to be in the best interest of the Authority, the Fire Chief may approve increased vacation accruals for new employees, using the rate as described above for employees with at least three years of continuous service.

B. Vacation Credit

Vacation credit shall be applied to the employee's vacation accumulation account only upon completion of each pay period. No credit shall be applied during the progress of any pay period or for any portion of a pay period during which the employee terminates Authority service.

C. Maximum Allowable Vacation Accrual

1. For full time employees with less than ten (10) years of full-time continuous service: three hundred twenty (320) hours.

2. For part-time employees with less than ten (10) years of full-time continuous service: a prorated amount equal to eight (8) weeks of vacation for part-time employees.

3. For full time employees with more than ten (10) years of full-time continuous service: four hundred (400) hours.

4. For part-time employees with more than ten (10) years of full-time continuous service: a prorated amount equal to ten (10) weeks of vacation for part-time employees.

5. All vacation hours earned in excess of the maximum allowable vacation accrual shall be paid in the pay period earned.

D. General Provisions Applicable to Vacation

1. Not more than eighty (80) hours of paid time may be credited toward accumulation of vacation credit in any pay period.

2. A leave of absence without pay shall cause the ten (10) years of full-time Authority

service (described on paragraph A above) to be postponed by the length of the leave.

3. In any use of vacation, an employee's account shall be charged to the nearest quarter hour.

4. Vacations shall be scheduled for employees by the Authority; however, consideration shall be given to effectuating the wishes of those employees requesting specific vacation periods.

5. Employees shall not be required to return to work during the time of his/her paid vacation except in cases of emergency.

6. No scheduled vacation shall be canceled, except in cases of emergency.

7. When an employee's Authority service consists of part-time regular service or a combination of full-time regular and part-time regular service, both periods of service shall apply towards the required ten (10) years of Authority service, with the part-time service being applied proportionately to the appropriate full-time interval.

8. No employee shall be permitted to work for compensation for the Authority in any capacity during the time of his/her paid vacation from the Authority service. Employees are permitted to receive reimbursements for voluntary service as Reserve Firefighters while on paid vacation from Authority service.

E. Vacation Payoff

1. An employee separating from Authority service for reasons other than paid Authority retirement shall be paid for all accrued vacation in a lump sum payment. An employee who is separating from Authority service by way of paid Authority retirement may elect either to take time off for his/her vacation or to be paid for his/her vacation in a lump sum payment.

2. During each fiscal year, an employee may request to be paid for accrued vacation in either two (2) separate increments of up to forty (40) hours each or one (1) increment of up to eighty (80) hours. An employee who is within fifteen (15) hours of the applicable maximum allowable vacation accrual (as set forth in paragraph C above) may request to be paid for one (1) additional increment of up to eighty (80) hours in each fiscal year.

Section 3. <u>Holidays</u>

A. Holidays Observed

Employees shall observe the following holidays:

- New Year’s Day

- Martin Luther King, Jr.'s Birthday
- Lincoln's Birthday
- President’s Day
- Memorial Day
- Independence Day
- Labor Day
- Columbus Day
- Veteran's Day
- Thanksgiving Day
- Day after Thanksgiving
- Christmas Eve
- Christmas Day

B. Holiday Compensation

1. For each holiday each full-time employee scheduled to work, but permitted to take the day off, shall be paid for the number of hours the employee is regularly scheduled to work that workday computed at the employee's base hourly rate. A part-time employee scheduled to work, but permitted to take the day off shall receive pay computed at the employee's base hourly rate for the number of hours the employee was regularly scheduled to work to a maximum of nine (9) hours of holiday pay.

2. When a holiday falls on a full-time employee's regularly scheduled day off, the employee shall receive eight (8) hours of compensatory time. A part-time employee shall receive compensatory time at the rate of one (1) hour for each five (5) hours of regularly scheduled work in the workweek to a maximum of eight (8) hours of compensatory time.

3. When a holiday falls on a Sunday, the next day (Monday) shall be observed as the holiday.

4. When Christmas Eve, Christmas Day or New Year's Day falls on a Saturday, the Friday immediately preceding each day shall be observed as the holiday.

5. Employees shall be paid on the paycheck following the pay period during which the holiday occurred.

6. Full-time employees who are on a pay status during the pay period that includes March 1st each fiscal year shall be credited with two (2) hours of paid time at the end of the pay period that includes that date. Part-time employees whose regularly assigned work schedule is at least twenty (20) hours per week shall, in like manner, earn and be credited with one (1) hour of paid time .

7. Eligibility for Holiday Pay

   a. An employee must be in paid status on their regular work days immediately

preceding and after the holiday in order to receive holiday pay.

b. A new employee whose first working day is the day after a holiday shall not be paid for that holiday.

c. An employee who elects paid Authority retirement on a holiday shall be paid for the holiday.

d. An employee who is terminating employment for reasons other than paid Authority retirement and whose last day as a paid employee is the day before a holiday shall not be paid for that holiday.

e. With Authority approval, compensatory time earned for working on a holiday or for a holiday falling on a regularly scheduled day off may be taken on the first scheduled working day after the holiday.

8. Compensation for Work on Holidays: An employee who is required to work on a holiday shall, in addition to his/her regular pay, receive compensatory time for each hour worked on a holiday at a rate of one and one half (1.5) times the employee's base hourly rate.

9. Holidays that fall during an employee's vacation period shall not be charged against the employee's vacation balance.

10. Compensatory time earned under the provisions of this Section may be granted as compensatory time off or paid for at the discretion of the Authority. Employees shall be paid for all compensatory time in excess of eighty (80) hours.

Section 4. <u>Bereavement Leave</u>

Upon request, employees shall receive necessary time off with pay, not to exceed three (3) days in any one (1) instance, for bereavement leave related to the death of their immediate family. For purposes of this Section, immediate family shall mean registered domestic partner, father, father-in-law, mother, mother-in-law, step-parent, brother, sister, wife, husband, child, grandparent, grandchild or dependent child or adult for whom the employee is the legal guardian.

Section 5. <u>Authorized Leave Without Pay</u>

A. Authority Leave

1. Upon request, an employee may be granted an Authority Leave Without Pay for a period of time not to exceed fifteen (15) calendar days. The granting of such Leave shall be at the discretion of the Fire Chief, except in cases where Official Leave has been authorized pursuant to Section B below. The Fire Chief may require that all accumulated compensatory time be used prior to granting of such Leave. The use of earned vacation prior to the obtaining of Leave shall be at the option of the employee.

B. Official Leave Without Pay

1. Upon request, an employee may be granted an Official Leave of absence without pay. Such Leave, if granted, shall not exceed one (1) year, except as provided in Sections B.2 and B.3 of this Section. The Fire Chief may require that all or a portion of accrued compensatory time and vacation be used prior to granting such Leave.

2. An Official Leave of Absence without pay may be extended for up to an additional year at the discretion of the Fire Chief. If the Fire Chief denies the extension of such Leave, paragraphs B.5 and B.6 of this Section shall not apply.

3. An employee shall give notice two (2) weeks prior to the date he/she wants to return to work. If an employee does not give the required notice prior to the date he/she wants to return to work, the Authority shall not be required to return the employee to work until the employee gives such notice; however, the Authority may waive the notice or reduce the notice period at its discretion.

4. The Department Head/Assistant Chief shall indicate on the request for Leave of Absence his/her recommendations as to whether the request should be granted, modified, or denied and shall promptly transmit the request to the Human Resources Director. The Human Resources Director shall render a decision within thirty (30) days of when the request is submitted to him/her. If the Human Resources Director approves the request, he/she shall deliver a copy to the Finance Manager, the Department Head/Assistant Chief, and the employee.

5. If the Human Resources Director modifies or does not approve a request for Official leave without pay, the employee and/or the Department Head/Assistant Chief may, within fifteen (15) calendar days of said action, file a request with the Human Resources Director for review by the Fire Chief. Upon such request, the Human Resources Director shall forward a copy of the request for Official Leave without pay to the Fire Chief for final determination. The employee and the Department Head/Assistant Chief shall notify the Human Resources Director whether he/she shall submit his/her position in a written statement or wishes to appear before the Fire Chief. The decision of the Fire Chief on such appeals shall be final.

6. An Official Leave without pay shall not be deemed a break in Authority service. However, an employee shall not accrue seniority when on such leave.

C. General Provisions

1. A request for an Official Leave of Absence shall be made upon forms prescribed by the Human Resources Director and shall state specifically the reason for the request, the date when it is desired to begin the leave of absence, and the probable date of return.

2. The request shall normally be initiated by the employee, but may be initiated by the employee's supervisor or Department Head/Assistant Chief only where the employee is unable to initiate such request.

Section 6. Jury Duty Leave

A. An employee who is called for jury duty or for examination for jury duty shall be compensated (as though he or she was working) for those hours of absence due to the jury duty that occurs during the employee's regularly scheduled working hours.

Section 7. Witness Leave

An employee who is called to answer a subpoena as a witness for court appearances during the employee's work hours, except where the employee is a litigant or where the subpoena is related to the employee's employment with another employer, shall be compensated as though he or she was working for all hours of absence from work due to answering the subpoena, provided the employee shows proof of such subpoena and deposits witness fees received for such hours, exclusive of mileage, with the Finance Manager. Fees for answering a subpoena as a witness during hours other than regularly scheduled working hours may be retained by the employee.

Section 8. Workers' Compensation Leave

A. When an injury is determined to be job-related in accordance with Part 2 of the Personnel and Salary Resolution, an employee shall be placed on Workers' Compensation Leave. If the question of industrial causation has not yet been made and all sick leave has been applied to the absence, the employee shall be placed on Official Leave until a final determination is made.

B. Workers' Compensation Leave shall continue until the employee:

   1. Is determined to be physically able to return to work by an Authority-designated physician; or

   2. Is determined to be physically able to return to work with medical restrictions that the Authority can accept; or accepts employment outside the Authority; or

   3. Accepts employment in another Authority position; or

   4. Has retired from the Authority; or

   5. Is terminated from the Authority.

   An employee who does not return to work within two (2) weeks of the end of his/her Workers' Compensation Leave pursuant to this provision shall be considered to have automatically resigned his/her employment with the Authority.

C. An employee on Workers' Compensation Leave must give notice two (2) weeks prior to the date he/she wants or is able to return to work. If an employee does not give two (2) weeks' notice prior to the date he/she wants or is able to return to work, the Authority shall not be required to return the employee to work until such notice is given; however, the Authority may waive the notice or reduce the notice period at its discretion.

Section 9. Catastrophic Leave

A. Eligibility for Donations - To receive Catastrophic Leave Donations, an employee or his/her immediate family member (immediate family member is defined as father, father-in-law, mother, mother-in-law, step-parent, brother, sister, wife, husband, child, step-child, grandparent, registered domestic partner, or legal guardian) must:

1. Have a catastrophic medical condition that shall require the employee to be on unpaid Leave.

2. Exhaust all allowable accrued sick leave, vacation, and compensatory time.

3. Submit to the employee's Department Head/Assistant Chief (or his/her designee) a written request for donations accompanied by a medical statement from the employee's or family member's attending physician. The attending physician's statement must verify the employee's need for an extended Medical Leave or the need for the employee to take leave to care for a member of his/her immediate family, and must include an estimated time the employee shall be unable to work.

B. Request for Additional Donations

1. Employees who receive donations and who exhaust all donated sick leave may request an additional donation period(s).

C. Donation Procedure

1. Upon receipt of a valid request for donations from an eligible employee, the Department Head/Assistant Chief (or his/her designee) shall post a notice of the eligible employee's need for donations on the Authority e-mail system, bulletin boards, or other means of notification accessible to employees. Confidential medical information, unless voluntarily provided by the employee to the Authority, shall not be included in the posted notice.

2. Employees shall be provided a two (2) week period to submit their donations; donations received after the submission period shall not be processed.

3. All donations shall be voluntary.

4. Employees may donate vacation or compensatory time to the eligible employee's catastrophic leave bank; sick leave may not be donated.

5. Donations must be a minimum of two (2) hours, but cannot exceed eight (8) hours; all donations must be made in whole hour increments.

6. All donations shall be irrevocable.

7. At the close of the donation period, the Finance Division shall verify the hourly rate of the donating employee and confirm that each donating employee has accrued time

balances sufficient to cover the designated donation.

8. The Finance Division shall process all donations at one (1) time; no additional donations shall be processed.

9. The Authority shall convert the donated time to dollars at the hourly rate of the donor. The dollars shall then be converted to accrued vacation and sick leave, as described herein, at the hourly rate of the recipient of the donation. Donated converted hours shall first be added to the recipient's accrued vacation, to the maximum permitted under Section C. of Section 19. The balance of the donated converted hours shall then be added to the recipient's sick leave account. These donated vacation and sick leave hours shall be available for use during the recipient's Catastrophic Leave. If any donated hours remain at the end of the recipient's Catastrophic Leave, they shall remain available for the sole use of the recipient. If the recipient dies during the Catastrophic Leave, all unused donated time shall be converted to dollars at the hourly rate of the recipient and paid to the recipient's surviving spouse or estate in the same manner as any monies due for vacation and/or compensatory time.

10. An employee who is on a leave without pay at the time he/she receives a Catastrophic Leave donation shall be treated as if on a leave of absence for purposes of probation and merit increase eligibility.

Section 10. <u>Paid Annual Leave</u>

A. Effective July 10, 2015, employees are eligible to use paid annual leave (PAL) as follows:

1. Upon completion of new hire probation with the Authority, an employee will be eligible to take up to forty (40) hours of PAL time off each calendar year in addition to his/her other accrued time.

2. On January 1 of each subsequent year following July 10, 2015 or the employee's completion of probation with the Authority, eligible employees will receive forty (40) hours of PAL time.

3. PAL time may not be accrued and must be used within the year earned, which shall be no later than December 31 of that year. If any of the 40 hours of PAL are not used by the employee, it will result in the employee's PAL bank being increased for the following year so that he/she has exactly 40 hours to use within that calendar year. At no time can the employee have more than 40 hours in his/her PAL bank.

4. As permitted by Labor Code section 227.3, PAL may not be cashed-out at any time, including at the end of employment.

5. Approval to use PAL is subject to operational need and the requests should be made in advance. If a specific date is denied, the approving manager will attempt to schedule a mutually agreeable alternate date. Such alternate dates must be scheduled within the year the PAL is earned.

ARTICLE V

EMPLOYEE/EMPLOYER RELATIONS

Section 1. Discipline

Employee discipline, including the process for issuing discipline and employee appeal rights, are included in this Section.

A. Suspension, Reduction in Pay, Demotion or Discharge

1. An employee subject to suspension, reduction in pay, demotion or discharge shall receive a written notice of proposed disciplinary action. Except for proposed notice of suspension of 40 hours or less (which may be issued at any time prior to the effective date of the discipline) the notice will be issued at least fourteen (14) calendar days prior to the effective date of the proposed action and shall contain:

    a. A description of the proposed action and its effective date(s);

    b. A statement of the alleged facts which support the proposed action as well as the grounds which are supported by the alleged facts;

    c. Copies of documents or other evidence on which the proposed action is based will be attached;

    d. A statement of the employee's right to respond, either orally or in writing, prior to the effective date of such proposed action;

    e. A statement of the employee's right to representation; and

    f. A statement of the employee's right to appeal should such proposed action become final.

2. Prior to the effective date of a suspension of more than forty (40) hours, reduction in pay, demotion or discharge, an employee shall be given an opportunity to respond, either orally or in writing, at the employee's option, to a designated Authority representative with the authority to make an effective recommendation on the proposed disciplinary action.

3. An employee shall be given reasonable time off without loss of pay to attend a meeting (known as a *Skelly* meeting) (if the employee chooses to respond orally) to respond to the notice of proposed discipline.

4. An employee may represent himself/herself or may be represented by his/her representative in the disciplinary process.

5. An employee and his/her representative shall receive written notice sustaining,

modifying, or canceling a proposed discipline on or prior to the effective date of such action.

6. Should a proposed discipline become final, an employee shall receive a written notice of discipline which will include the employee's right to appeal such action pursuant to Section C of this Section.

B. Reprimand or Denial of Merit Increase

1. A written reprimand or denial of a merit increase requires reasonable cause.

2. An employee may challenge a written reprimand or denial of merit increase as set forth below in paragraph D.

C. Right to Appeal

1. Employees who receive a Notice of Proposed Discipline as well as a Notice of Discipline shall have the right to respond prior to the discipline being imposed as well as a right to appeal the discipline per the appeal procedure in paragraph D below.

2. If an employee does not comply with the time limits set forth in the appeal procedure in paragraph D below, the employee has waived his/her right to further process the appeal, and the disciplinary action shall be issued. Failure by the Authority representative to timely respond to the time limits set forth in paragraph D shall permit the employee to progress the appeal to the next step.

3. The time limits for appeals may be extended by mutual agreement between the Authority representative and employee or his/her representative.

D. Appeal Procedure – The *Skelly* Process and Appeal Process

1. The appeal procedure shall include two internal steps as well as an ability of an employee to request arbitration as set forth below.

2. All appeals must be submitted to the Human Resources Director who administers employee discipline. Submission of the appeal may be via mail, email, or hand delivery. The appeal must be delivered no later than 5:00 p.m. on the last day allowable under the provisions of this Section.

a. STEP 1

i. Reprimand or Performance Salary Increase Denial

Upon receipt of a reprimand or denial of a performance salary increase, an employee may, within fourteen (14) calendar days of receipt of such notice, submit a request to the Human Resources Director for a meeting to address the matter. The Human Resources Director shall schedule a meeting with the appropriate Authority representative to hear the employee's presentation. After the employee's presentation, a written determination

shall be made within fourteen (14) calendar days.

ii. Suspension, Reduction in Pay Demotion or Discharge

Upon receipt of a notice of intent to suspend, reduce in pay, demote or discharge an employee may, within fourteen (14) calendar days of receipt of such notice, submit a request to the Human Resources Director, for a meeting (called a *Skelly* meeting) to address the charges in the notice. The Human Resources Director shall schedule the meeting with the appropriate Authority representative to hear the employee's presentation. After the employee's presentation, a written determination shall be made within fourteen (14) calendar days.

b. STEP 2

i. Reprimand or Performance Salary Increase Denial

If the employee does not agree with the outcome in Step 1, the employee may, within fourteen (14) calendar days of receipt of the Step 1 written determination, submit a written appeal to the Human Resources Director. Within fourteen (14) calendar days of receipt of the appeal at Step 2, the appropriate Authority representative shall meet with the employee (including with the employee's representative if represented). Within fourteen (14) calendar days thereafter, a written decision shall be provided to the employee and his/her representative if represented. The determination shall be final and binding and not referable to arbitration.

ii. Suspension, Reduction in Pay, Demotion or Discharge
If the employee does not agree with the outcome in Step 1, the employee may within fourteen (14) calendar days of the receipt of the Step 1 written determination submit a written appeal to the Human Resources Director. Within fourteen (14) calendar days of receipt of the appeal, the appropriate Authority representative shall meet with the employee (including with the employee's representative if represented). Within fourteen (14) calendar days thereafter, a written decision shall be provided to the employee and his/her representative if represented.

c. Arbitration

i. For a suspension, reduction in pay, demotion or discharge, if the employee does not agree with the outcome at Step 2 the employee may appeal the matter to arbitration (which shall private, i.e., not a public hearing) by submitting the appeal in writing (and signed by the employee and/or his her representative if represented) to the Human Resources Director within fourteen (14) calendar days from the date of receipt of such Step 2 decision.

ii. Finding of Facts and Remedies

An arbitrator may sustain, modify, or rescind an appealed disciplinary action as follows and subject to the following restrictions:

First, the arbitrator shall determine if the grounds for discipline were proven by the authority. Second the arbitrator shall determine if the penalty imposed was appropriate given the proven grounds (which are supported by the facts alleged). If the arbitrator finds that the discipline was appropriate, he/she shall so find and the discipline is then sustained.

If the arbitrator finds that either the grounds alleged were not proven or the penalty imposed was not appropriate given the grounds that were proven, he/she shall have the authority to issue a decision which either modifies the discipline or concludes that it was issued without just cause.

If the arbitrator finds that the discipline was issued without cause, the employee shall entitled to back pay and benefits and if appropriate (for demotions and discharge) restoration to the position from which he was discharged or demoted. Restoration of pay and benefits shall be subject to deduction of all unemployment insurance, applicable taxes and withholdings, and outside earnings that the appellant received since the date of discharge if applicable.

E. General Provisions Regarding Discipline and the Disciplinary Process

1. The cost of an arbitrator shall be shared equally in all cases by the Authority and the Association (if the Association is paying for any part of the employee's appeal) or solely by the Authority if the Association is not providing any financial support to the employee appealing his/her discipline.

2. Arbitration appeal hearings for suspensions of less than forty (40) hours shall be limited to one (1) day, unless both parties agree that a longer hearing is necessary. Both parties shall be allotted equal time during arbitration hearings involving such suspensions.

3. The arbitrator shall be selected by the mutual agreement of the parties. If the parties cannot agree upon an arbitrator, a list of seven (7) arbitrators shall be obtained from the California State Mediation and Conciliation Service, and each party shall alternately strike one (1) name from the list until only one (1) name remains. The parties will flip a coin to determine who will strike the first name.

4. Upon written request by the opposing party in a pending hearing given at least twenty-eight (28) calendar days prior to the scheduled hearing date, the party requested shall supply to the party submitting the requested copies of all documentary evidence to be used by that party at the hearing. Such evidence shall be provided no later than fourteen (14) calendar days prior to the scheduled hearing

date. Any evidence not so provided may not be admitted or offered as evidence at the subsequent hearing, except that any such documentary evidence discovered by a party after such a request for copies, but not soon enough to comply with the above time limits, may be admitted, provided it could not have been discovered sooner by reasonable means and provided further that a copy or copies of such evidence be afforded the requesting party as soon as practicable after such discovery. Nothing contained herein shall operate to prevent either party from presenting additional documents by way of rebuttal.

5. An employee shall not suffer loss of pay for time spent as a witness at an arbitration hearing held pursuant to this procedure. The number of witnesses requested to attend and their scheduling shall be reasonable and scheduled in advance.

6. At the hearing, both the employee and/or his/her representative and the Authority shall have the right to be heard and to present evidence. The following rules shall apply:

   a. Oral evidence shall be taken only on oath or affirmation.

   b. Each party shall have these rights: to call and examine witnesses, to introduce exhibits, to cross-examine opposing witnesses on any matter relevant to the issues even though that matter was not covered in the direct examination, to impeach any witness regardless of which party first called the witness to testify, and to rebut the evidence against the witness. If the employee does not testify in his/her own behalf, the employee may be called and examined as if under cross-examination.

7. The hearing need not be conducted according to technical rules relating to evidence and witnesses. Any relevant evidence shall be admitted if it is the sort of evidence on which responsible persons are accustomed to rely in the conduct of serious affairs, regardless of the existence of any common law or statutory rule that might have made improper the admission of such evidence over objection in civil actions. Hearsay evidence may be used for the purpose of supplementing or explaining any direct evidence, but shall not be sufficient in itself to support a finding, unless it would be admissible over objection in civil actions. The rules of privilege shall be effective to the same extent that they are not, or hereafter may be, recognized in civil actions, and irrelevant and unduly repetitious evidence shall be excluded.

8. The Authority shall be allowed to have at least one (1) employee who may be called upon to testify as a witness present at the arbitration hearing at all times.

9. The decision of the arbitrator shall be final and binding on all parties.

Section 2. Grievance Procedure

A. Scope of Grievances

A grievance may be filed by an employee or the Association for an alleged violation of this MOU or to challenge a performance evaluation rated substandard. Although not a grievance, if an employee has a problem relating to a work situation, the employee is encouraged to request a meeting with his/her immediate supervisor to discuss the problem in an effort to clarify the issue and to work cooperatively towards a satisfactory resolution.

B. Processing a Grievance

The grievance procedure set forth below must be followed to process a grievance

Grievances must be submitted to the Human Resources Director within the time limits outlined in this Section. Submission may be via mail, hand delivery, or email, but must be delivered no later than 5:00 p.m. on the last day allowable under the provisions of this Section. A grievance may be filed by an employee or the employee's representative in the name of the employee, at the employee's request as well as by the Association.

1. STEP 1:

   A grievance must be submitted in writing within fourteen (14) calendar days from the occurrence that gave rise to the problem and shall state the nature of the grievance and the requested remedy. A Step 1 grievance shall be heard by an appropriate Authority representative who has authority to consider the grievance. Within fourteen (14) calendar days after receipt of the written grievance, the employee (including his/her representative) and/or the Association representative shall meet with the grievant in an attempt to resolve the grievance. Within fourteen (14) calendar days of that meeting, the Authority representative will then issue a decision at Step 1. The grievance will either be resolved to the satisfaction of the grievant (employee or association) or the grievant has the right to request that the grievance be submitted to step 2.

2. STEP 2:

   If the grievance is not resolved at Step 1 and it alleges a misinterpretation or misapplication of this MOU, it may be appealed in writing to the Human Resources Director within fourteen (14) calendar days after receipt of the written decision from Step 1. Within fourteen (14) calendar days after receipt of the written Step 2 grievance, the Fire Chief or his/her designee shall meet with the grievant and his/her representative to try and resolve the grievance. Within fourteen (14) calendar days thereafter, a written decision shall be given to the grievant and his/her representative. The decision of the Fire Chief or his/her designee, regarding a substandard performance evaluation, shall be final and binding and shall not be referable to arbitration. If the grievance alleges a misinterpretation or misapplication of this MOU, it may be appealed further to arbitration.

   A. Mediation

A grievant who is not satisfied with the decision at Step 2 has the right (but not the obligation to request that the grievance be submitted to mediator to attempt to resolve. Mediation is a non-binding process where the parties utilize the services of a mediator to try and reach an amicable resolution of the grievance. If mediation is chosen, the Authority will request a list of mediators from the State Mediation and Conciliation Service. If the parties cannot agree on one of the mediators each party shall alternately strike one (1) name from the list until only one (1) name remains. The parties will flip a coin to determine who will strike the first name. The grievance will either be resolved to the satisfaction of the grievant (employee or association) or the grievant has the right to request that the grievance be submitted to arbitration.

B. Arbitration

If a grievance is not resolved at Step 2 (or at mediation of that process is used) the grievant may request that it be submitted to arbitration. Such a request must be made within fourteen (14) calendar days from the date a decision was rendered at Step 2 or the completion of the mediation process. The arbitrator shall conduct a private hearing (i.e., not in public). The process for that hearing is set forth below.

1) If the grievance is decided by an arbitrator, the grievant and his/her representative shall relinquish any current or future claim to seek or obtain remedy through any other Authority appeal procedures.

2) The cost of an arbitrator shall be shared equally in all cases by the Authority and the grievant.

3) The arbitrator shall be selected by the mutual agreement of the parties. If the parties cannot agree upon an arbitrator, a list of seven (7) arbitrators shall be obtained from the California State Mediation and Conciliation Service, and each party shall alternately strike one (1) name from the list until only one (1) name remains. The parties will flip a coin to determine who will strike the first name.

4) Upon written request by the opposing party in a pending hearing given at least twenty-eight (28) calendar days prior to the scheduled hearing date, the party requested shall supply to the party submitting the request copies of all documentary evidence to be used by that party at the hearing. Such evidence shall be provided no later than fourteen (14) calendar days prior to the scheduled hearing date. Any evidence not so provided may not be admitted or offered as evidence at the subsequent hearing, except that any such documentary evidence discovered by a party after such a request for copies, but not soon enough to comply with the above time limits, may be admitted, provided it could not have been discovered sooner by reasonable means and provided further that a copy or copies of such evidence be afforded the requesting party as soon as practicable after such discovery.

Nothing contained herein shall operate to prevent either party from presenting additional documents by way of rebuttal.

5) An employee shall not suffer loss of pay for time spent as a witness at an arbitration hearing held pursuant to this procedure. The number of witnesses requested to attend and their scheduling shall be reasonable and scheduled in advance.

6) At the hearing, both the employee and/or the employee's representative and the Authority shall have the right to be heard and to present evidence. The following rules shall apply:

   i. Oral evidence shall be taken only on oath or affirmation.

   ii. Each party shall have these rights: to call and examine witnesses, to introduce exhibits, to cross-examine opposing witnesses on any matter relevant to the issues even though that matter was not covered in the direct examination, to impeach any witness regardless of which party first called the witness to testify, and to rebut the evidence against the witness. If the employee does not testify in his/her own behalf, the employee may be called and examined as if under cross-examination.

   iii. The hearing need not be conducted according to technical rules relating to evidence and witnesses. Any relevant evidence shall be admitted if it is the sort of evidence on which responsible persons are accustomed to rely in the conduct of serious affairs, regardless of the existence of any common law or statutory rule that might have made improper the admission of such evidence over objection in civil actions. Hearsay evidence may be used for the purpose of supplementing or explaining any direct evidence, but shall not be sufficient in itself to support a finding, unless it would be admissible over objection in civil actions. The rules of privilege shall be effective to the same extent that they are now, or hereafter may be, recognized in civil actions, and irrelevant and unduly repetitious evidence shall be excluded.

   iv. The Authority shall be allowed to have at least one (1) employee who may be called upon to testify as a witness present at the arbitration hearing at all times.

   v. The decision of the arbitrator shall be final and binding on all parties.

C. General Provisions Grievances

1. If an employee does not present a grievance or does not appeal the decision rendered regarding his/her grievance within the time limits, the grievance shall be considered resolved.

2. If an Authority representative does not render a decision to the employee within the

time limits, the employee may, within fourteen (14) calendar days, thereafter appeal to the next step in the procedure.

3. If it is the judgment of any management representative that he/she does not have the authority to resolve the grievance, he/she may refer it to the next step in the procedure. By mutual agreement of the Authority and the employee and/or his/her representative, Step 1 of the grievance procedure may be waived.

4. Upon prior written consent of the parties (i.e., the representatives of the Authority and the employee or his/her representative), the time limits at any step in the procedure may be extended.

5. Every reasonable effort shall be made by the employee and the Authority to resolve a grievance at the lowest possible step in the grievance procedure.

6. In order to encourage candid discussion and compromise in attempting to resolve grievances, the Authority and the employee and/or his/her representative agree that the grievance files of the respective parties shall be confidential.

7. If any two (2) or more employees have essentially the same grievance, they may, and if requested by the Authority must, collectively present and pursue their grievance if they report to the same immediate supervisor.

8. If the grievant is a group of more than three (3) employees, the group shall, at the request of the Authority, appoint one (1) or two (2) employees to speak for the collective group.

9. An employee may represent himself/herself or may be represented by his/her representative in the formal grievance procedure.

D. Time Off for Processing Grievances

1. Reasonable time off without loss of pay shall be given to:

    a. An employee who has a grievance, in order to attend a meeting with his/her supervisor or other person with authority to resolve the matter, as prescribed herein.

    b. An authorized grievance representative, in order to attend a meeting with the represented grievant's supervisor or other person with authority to resolve the grievance, or to obtain facts concerning the action grieved through discussion with the grievant or other employees.

2. The following restrictions shall apply in all cases to activities related to processing a grievance:

    a. Before performing any activities related to processing a grievance during work hours, the grievant or grievance representative shall obtain permission of his/her

supervisor, if applicable, and shall report back to the supervisor when the activity is completed.

b. Neither the grievant nor the grievance representative shall interrupt or leave his/her job to perform such activities unless his/her supervisor determines that such interruption or absence shall not unduly interfere with the work of the unit in which the grievant or representative is employed. However, an effort shall be made to grant such time off as soon as it is feasible to do so.

c. When an authorized grievance representative must go into another section or unit to investigate a grievance, if applicable, the representative shall be permitted to do so provided that:

   i. The representative checks in and checks out with the supervisor of the unit; and

   ii. Such investigation will not unduly interfere with the work of the unit.

Section 3. <u>Layoffs</u>

The Authority shall follow the Layoff Procedure set forth in the Personnel and Salary Resolution.

Section 4. <u>Probationary Period</u>

A. New Probation

1. Full-Time Employee

   A new or reemployed employee who has been out of Authority service for more than two (2) years shall be placed on new probationary period for fifty-two (52) weeks from the date of appointment ending with the first day of the pay period following completion of said period.

2. Part-Time Employee

   A new or reemployed employee who has been out of Authority service for more than two (2) years, employed in a part-time position, shall be placed on new probation for two thousand eighty (2080) paid hours ending with the first day of the pay period following completion of said period.

B. Promotional Probation

1. An employee who is promoted, except on a temporary promotion, shall be placed on promotional probation, except as provided in Section B.2 of this Section.

   a. A full-time employee shall serve a probation period of fifty-two (52) weeks ending with the first day of the pay period following completion of said period.

b. A part-time employee shall serve a promotional probation period of two thousand eighty (2080) paid hours ending with the first day of the pay period following completion of said period.

2. When an employee is promoted, demoted or reassigned as a result of the employee's position being reclassified and the class from which the employee is promoted, demoted or reassigned is subsequently deleted or abolished, the incumbent employee shall not be required to serve a promotional probation period.

C. Failure of Probation

1. New Probation

An employee on new probation may be released from service at the sole discretion of the Authority at any time without right of appeal.

2. Promotional Probation

a. An employee on promotional probation may be rejected from probation at any time at the sole discretion of the Authority at any time without right of appeal

b. When an employee fails his/her promotional probation, the employee shall have the right to return to his/her former class, provided the employee was not in the previous class for the purpose of training for a promotion to a higher class.

c. When an employee is returned to his/her former class under the provisions of this Section, the employee shall serve the remainder of any uncompleted probationary period in the former class.

d. If the employee’s former class has been deleted or abolished, the employee shall have the right to return to a class in his/her former occupational series closest to, but no higher than, the salary range of the class that the employee occupied immediately prior to promotion and shall serve the remainder of any probationary period not completed in the former class.

e. An employee who fails promotional probation shall receive a performance evaluation stating the reason for failure of promotional probation.

D. General Provisions Regarding Probationary Periods

1. When an employee's record consists of a combination of full-time and part-time service, part-time service shall be applied proportionately by using total hours worked to appropriate full-time requirements. For purposes of this Section, two thousand eighty (2080) hours shall equal fifty-two (52) weeks.

2. When an employee successfully completes probation, it shall be based upon a written performance evaluation which shall be discussed with the employee. An

employee who is permitted by the Authority to work beyond the end of a probation period shall be deemed to have passed such probation period.

E. Extension of Probation Periods

1. Time away from work (excluding any paid leave) in excess of fifteen (15) cumulative calendar days (including time on light duty,) during probation shall cause the employee's probationary period to be extended by the length of the time away from work.

2. Upon recommendation of the Assistant Chief/Department Head or his/her designee or request of the employee with the concurrence of the Assistant Chief/Department Head or his/her designee, the probationary period of an employee may be extended at the sole discretion of the Human Resources Director for a period not to exceed one hundred eighty (180) calendar days, Such action must approved by the Human Resources Director prior to the employee's probationary period has ended. Denial of a request to extend a probation period (by an employee) shall not be subject to appeal or grievance.

Section 5. <u>Performance Evaluations</u>

A. The Authority shall maintain a system of employee performance ratings designed to give a fair evaluation of the quantity and quality of work performed by an employee. Such ratings shall be prepared and recorded in the employee's personnel file for all employees at least once each year, and, in addition, for employees on probationary status, at least once near the middle of the probation period and prior to the end of the probation period.

B. The Authority shall discuss with the employee the specific ratings prior to such ratings being made part of the employee's personnel file.

C. When a performance evaluation is recorded in the personnel file of an employee, a copy of such evaluation, together with any attachment relating thereto, shall be given to the employee.

Section 6. <u>Personnel Files</u>

A. The Authority shall maintain a personnel file for each employee.

B. Adverse documents prepared by the Authority shall not be included in an employee's personnel file unless a copy is provided to the employee. The employee will have the right to place any comments (in response to the document) on adverse documents which are entered into the employee's personnel file.

C. An employee shall have the right to inspect and review the contents of his/her personnel file at reasonable intervals including when subject to discipline.

D. Letters of reference and reports concerning criminal investigations concerning the employee shall be excluded from the provisions of paragraphs B and C above.

E. Any contents of an employee's official personnel file may be destroyed pursuant to an agreement between the Human Resources Director and the employee concerned or by an order of an arbitrator or court, unless the particular item is otherwise required by law to be kept.

Section 7. <u>Association Rights</u>

A. Payroll Deductions

Association membership dues shall be deducted by the Authority from the pay checks/direct deposits of such members. The Authority shall transmit the dues so deducted to the Association on a monthly basis.

B. Use of Bulletin Board

Space shall be made available to the Association on Authority bulletin boards, provided such use does not interfere with the needs of the Authority, and material posted is not derogatory to the Authority, Authority employees, or other employee organizations. Material which is derogatory towards any employee or the Authority may be removed by the Authority. Notices shall be dated and signed by the authorized representatives of the Association responsible for their issuance.

C. Use of Authority Facilities

With the approval of the Human Resources Director, the Association may hold meetings of their members on Authority property during non-working hours, provided the request is made to the Human Resources Director as to the specific location and dates of the meeting prior to such meeting. Requests will granted if meeting space is available.

APPENDIX A

ADMINISTRATIVE MANAGEMENT CLASSIFICATIONS

Classes included in the Administrative Management Unit as of July 10, 2015:

0570 Accounting Manager
1810 Assistant Clerk of the Authority
1374 Assistant Information Technology Mgr - Customer Relations & Consulting
1371 Assistant Information Technology Mgr - GIS & Data Management
1373 Assistant Information Technology Mgr - Infrastructure & Workplace Support
1372 Assistant Information Technology Mgr - Portfolio & Procurement
1710 Assistant Treasurer
0750 Benefit Services Manager
1820 Clerk of the Authority
0440 Construction Manager
0190 Deputy Fire Marshal
0765 Employee Relations Manager
1530 EMS Coordinator
0430 Facilities Maintenance Manager
0590 Finance Manager
0280 Fleet Services Manager
1370 Information Technology Manager
1630 Legislative Analyst
1620 Management Analyst
1540 Medical Director
0760 Organizational and Development Training Program Manager
0560 Payroll/Accounts Payable Manager
0450 Property Manager
0330 Purchasing and Materials Manager
0860 Risk Management Analyst
0870 Risk Management Safety Officer
0880 Risk Manager
0550 Senior Accountant
0740 Senior Human Resources Analyst
1720 Treasurer

APPENDIX B

SALARY SCHEDULE

ORANGE COUNTY FIRE AUTHORITY - CLASSIFICATION SALARY TABLE

PERSONNEL & SALARY RESOLUTION

EFFECTIVE 1/8/2016

EE Class	Class Code	Class Title	Barg Unit	Grade RS	Pay Type	STEPS 1	2	3	4	5	6	7	8	9	10	11	12
AM	0570	ACCOUNTING MANAGER	PR	AM90	Hourly	44.33	70.43										
					Biweekly	3,546.40	5,634.40										
					Monthly	7,683.87	12,207.87										
					Annual	92,206.40	146,494.40										
AM	1810	ASSIST CLERK OF THE AUTHORITY	PR	AM30	Hourly	34.95	55.52										
					Biweekly	2,796.00	4,441.60										
					Monthly	6,058.00	9,623.47										
					Annual	72,696.00	115,481.60										
AM	1710	ASSISTANT TREASURER	PR	AM70	Hourly	40.71	64.71										
					Biweekly	3,256.80	5,176.80										
					Monthly	7,056.40	11,216.40										
					Annual	84,676.80	134,596.80										
AM	1374	ASST IT MANAGER- CUST REL & CO	PR	AM105	Hourly	46.72	74.23										
					Biweekly	3,737.60	5,938.40										
					Monthly	8,098.13	12,866.53										
					Annual	97,177.60	154,398.40										
AM	1371	ASST IT MANAGER- GIS & DATA MA	PR	AM105	Hourly	46.72	74.23										
					Biweekly	3,737.60	5,938.40										
					Monthly	8,098.13	12,866.53										
					Annual	97,177.60	154,398.40										
AM	1373	ASST IT MANAGER- INFRA & WORKP	PR	AM105	Hourly	46.72	74.23										
					Biweekly	3,737.60	5,938.40										
					Monthly	8,098.13	12,866.53										
					Annual	97,177.60	154,398.40										
AM	1372	ASST IT MANAGER- PORTF & PROC	PR	AM105	Hourly	46.72	74.23										
					Biweekly	3,737.60	5,938.40										
					Monthly	8,098.13	12,866.53										
					Annual	97,177.60	154,398.40										
AM	0750	BENEFIT SERVICES MANAGER	PR	AM80	Hourly	41.28	65.55										
					Biweekly	3,302.40	5,244.00										
					Monthly	7,155.20	11,362.00										
					Annual	85,862.40	136,344.00										
AM	1820	CLERK OF THE AUTHORITY	PR	AM90	Hourly	44.33	70.43										
					Biweekly	3,546.40	5,634.40										
					Monthly	7,683.87	12,207.87										
					Annual	92,206.40	146,494.40										

OCC GRP	FLSA	EEO	RET	WC	PRB	MED
	E	10	G	9410	52	L

ORANGE COUNTY FIRE AUTHORITY - CLASSIFICATION SALARY TABLE

PERSONNEL & SALARY RESOLUTION

EFFECTIVE 1/8/2016

EE Class	Class Code	Class Title	Barg Unit	Grade	RS	Pay Type	STEPS 1	2	3	4	5	6	7	8	9	10	11	12
AM	0440	CONSTRUCTION MANAGER	PR	AM50		Hourly	37.34	59.32										
						Biweekly	2,987.20	4,745.60										
						Monthly	6,472.27	10,282.13										
						Annual	77,667.20	123,385.60										
AM	0190	DEPUTY FIRE MARSHAL	PR	AM90		Hourly	44.33	70.43										
						Biweekly	3,546.40	5,634.40										
						Monthly	7,683.87	12,207.87										
						Annual	92,206.40	146,494.40										
AM	0765	EMPLOYEE RELATIONS MANAGER	PR	AM115		Hourly	47.93	76.12										
						Biweekly	3,834.40	6,089.60										
						Monthly	8,307.87	13,194.13										
						Annual	99,694.40	158,329.60										
AM	1530	EMS COORDINATOR	PR	AM20		Hourly	34.53	54.87										
						Biweekly	2,762.40	4,389.60										
						Monthly	5,985.20	9,510.80										
						Annual	71,822.40	114,129.60										
AM	0430	FACILITIES MAINTENANCE MANAGER	PR	AM10		Hourly	33.92	53.90										
						Biweekly	2,713.60	4,312.00										
						Monthly	5,879.47	9,342.67										
						Annual	70,553.60	112,112.00										
AM	0590	FINANCE MANAGER	PR	AM120		Hourly	50.50	80.27										
						Biweekly	4,040.00	6,421.60										
						Monthly	8,753.33	13,913.47										
						Annual	105,040.00	166,961.60										
AM	0280	FLEET SERVICES MANAGER	PR	AM90		Hourly	44.33	70.43										
						Biweekly	3,546.40	5,634.40										
						Monthly	7,683.87	12,207.87										
						Annual	92,206.40	146,494.40										
AM	1370	INFO TECHNOLOGY MANAGER	PR	AM120		Hourly	50.50	80.27										
						Biweekly	4,040.00	6,421.60										
						Monthly	8,753.33	13,913.47										
						Annual	105,040.00	166,961.60										
AM	1630	LEGISLATIVE ANALYST	PR	AM30		Hourly	34.95	55.52										
						Biweekly	2,796.00	4,441.60										
						Monthly	6,058.00	9,623.47										
						Annual	72,696.00	115,481.60										

OCC GRP	FLSA	EEO	RET	WC	PRB	MED
0440	E	20	G	9420	52	L
0190	E	10	G	9410	52	L
0765	E	10	G	9410	52	L
1530	E	20	G	9410	52	L
0430	E	20	G	9410	52	L
0590	E	10	G	9410	52	L
0280	E	10	G	9410	52	M36
1370	E	10	G	9410	52	L
1630	E	10	G	9410	52	L

ORANGE COUNTY FIRE AUTHORITY - CLASSIFICATION SALARY TABLE

PERSONNEL & SALARY RESOLUTION

EFFECTIVE 1/8/2016

EE Class	Class Code	Class Title	Barg Unit	Grade RS	Pay Type	STEPS 1	2	3	4	5	6	7	8	9	10	11	12
AM	1620	MANAGEMENT ANALYST	PR	AM30	Hourly	34.95	55.52										
					Biweekly	2,796.00	4,441.60										
					Monthly	6,058.00	9,623.47										
					Annual	72,696.00	115,481.60										
AM	1540	MEDICAL DIRECTOR	PR	AM110	Hourly	47.42	75.33										
					Biweekly	3,793.60	6,026.40										
					Monthly	8,219.47	13,057.20										
					Annual	98,633.60	156,686.40										
AM	0760	ORG & DEV TRAINING PRO MANAGER	PR	AM80	Hourly	41.28	65.55										
					Biweekly	3,302.40	5,244.00										
					Monthly	7,155.20	11,362.00										
					Annual	85,862.40	136,344.00										
AM	0560	PAYROLL/ACCTS PAYABLE MANAGER	PR	AM70	Hourly	40.71	64.71										
					Biweekly	3,256.80	5,176.80										
					Monthly	7,056.40	11,216.40										
					Annual	84,676.80	134,596.80										
AM	0450	PROPERTY MANAGER	PR	AM100	Hourly	45.40	72.13										
					Biweekly	3,632.00	5,770.40										
					Monthly	7,869.33	12,502.53										
					Annual	94,432.00	150,030.40										
AM	0330	PURCHASING & MATERIALS MANAGE	PR	AM110	Hourly	47.42	75.33										
					Biweekly	3,793.60	6,026.40										
					Monthly	8,219.47	13,057.20										
					Annual	98,633.60	156,686.40										
AM	0860	RISK MANAGEMENT ANALYST	PR	AM40	Hourly	37.01	58.77										
					Biweekly	2,960.80	4,701.60										
					Monthly	6,415.07	10,186.80										
					Annual	76,980.80	122,241.60										
AM	0870	RISK MANAGEMENT SAFETY OFFICER	PR	AM40	Hourly	37.01	58.77										
					Biweekly	2,960.80	4,701.60										
					Monthly	6,415.07	10,186.80										
					Annual	76,980.80	122,241.60										
AM	0880	RISK MANAGER	PR	AM110	Hourly	47.42	75.33										
					Biweekly	3,793.60	6,026.40										
					Monthly	8,219.47	13,057.20										
					Annual	98,633.60	156,686.40										

OCC GRP	FLSA	EEO	RET	WC	PRB	MED
	E	10	G	9410	52	L
	E	10	G	9410	52	L
	E	20	G	9410	52	L
	E	10	G	9410	52	L
	E	10	G	9410	52	L
	E	10	G	9410	52	L
	E	10	G	9410	52	L
	E	10	G	9410	52	L
	E	10	G	9410	52	L
	E	10	G	9410	52	L

ORANGE COUNTY FIRE AUTHORITY - CLASSIFICATION SALARY TABLE

PERSONNEL & SALARY RESOLUTION

EFFECTIVE 1/8/2016

EE Class	Class Code	Class Title	Barg Unit	Grade	RS	Pay Type	STEPS 1	2	3	4	5	6	7	8	9	10	11	12
AM	0550	SENIOR ACCOUNTANT	PR	AM50		Hourly	37.34	59.32										
						Biweekly	2,987.20	4,745.60										
						Monthly	6,472.27	10,282.13										
						Annual	77,667.20	123,385.60										
AM	0740	SR HUMAN RESOURCES ANALYST	PR	AM40		Hourly	37.01	58.77										
						Biweekly	2,960.80	4,701.60										
						Monthly	6,415.07	10,186.80										
						Annual	76,980.80	122,241.60										
AM	1720	TREASURER	PR	AM120		Hourly	50.50	80.27										
						Biweekly	4,040.00	6,421.60										
						Monthly	8,753.33	13,913.47										
						Annual	105,040.00	166,961.60										

OCC GRP	FLSA	EEO	RET	WC	PRB	MED
	E	10	G	9410	52	L

PERSONNEL

AND

SALARY RESOLUTION

ORANGE COUNTY FIRE AUTHORITY

Revised by the Board of Directors
~~JUNE 23, 2016~~
November 17, 2016

TABLE OF CONTENTS

Page

DEFINITIONS **7**

PART 1

ARTICLE I **GENERAL PERSONNEL PROVISIONS** **11**
Section 1. Regulation of Employees 11
Section 2. Conflict of Interest 11
Section 3. Employment of Relatives 12
Section 4 Drug and Alcohol Policy 13
Section 5. Position Classification Plan 14
Section 6. Number and Classification of Activated Positions 15
Section 7. Selection Procedures 15
Section 8. Performance Evaluations 16
Section 9. Administrative Leave 16
Section 10. Military Leave of Absence 16
Section 11. Time Off for Voting 17
Section 12. Provisional Appointment 17
~~Section 13. At-Will Appointment ..... 18~~

ARTICLE II **PAY PRACTICES** **19**
Section 1. Method of Compensation for Employees 19
Section 2. Salary Payment Procedure 19
Section 3. Authorization for Salary Increases 19
~~Section 4. Salary on Employment as a Fire Crew Worker ..... 20~~
Section 4~~5~~. Compensation for Authority Employees When Performing As Volunteer Reserve Firefighters 20
Section 5~~6~~. Limitations Upon Compensation 20
Section 6~~7~~. Authority to Resolve Employee Complaints/Grievances 20

ARTICLE III **TUITION REIMBURSEMENT** **21**
Section 1. Objective 21
Section 2. Eligibility of Courses 21
Section 3. Eligibility of Employees 22
Section 4. Nature of Reimbursement 22
Section 5. Request Procedure 23

ARTICLE IV **PAYOFF PROVISIONS** **24**
Section 1. Sick Leave Payoff 24
Section 2. Vacation Payoff 24

ARTICLE V **INSURANCE FOR VOLUNTARY RESERVE FIREFIGHTERS** **25**
Section 1. Insurance for Volunteer Reserve Firefighters 25

ARTICLE VI **SUPPORTED EMPLOYMENT PROGRAM** **26**
Section 1. Program Intent 26
Section 2. Program Participants 26
Section 3. Insurance 26

Section 4. Retirement 26
Section 5. Other Benefits 26

ARTICLE VII SEPARABILITY 28

PART 2

ADMINISTRATIVE MANAGEMENT

ARTICLE I WORK HOURS 29
Section 1. Work Hours 29

ARTICLE II PAY PRACTICES 30
Section 1. Compensation for Employees 30
Section 2. Pay for New Employees 30
Section 3. Annual Merit Review Program 31
Section 4. Salary on Promotion 32
Section 5. Salary on Reassignment 32
Section 6. Salary on Reduction 33
Section 7. Salary on Reclassification 34
Section 8. Salary on Reemployment 34
Section 9. Change in Salary Allocation 34
Section 10. Additional Compensation 35

ARTICLE III EMPLOYEE PROVISIONS 36
Section 1. Time Off for Selection Procedures 36
Section 2. Probation 36
A. New Probation 36
B. Promotional Probation 36
C. Failure of Probation 37
D. General Provisions 38
E. Extension of Probation Periods 38
Section 3. Performance Evaluation 39
Section 4. Contents of Personnel File 39

ARTICLE IV EMPLOYMENT PROVISIONS 41
Section 1. Temporary Promotion 41
Section 2. Status of Limited-Term Employees 41
Section 3. Reemployment of Employees on Disability Retirement 42
Section 4. Reemployment of Regular Employee 42

ARTICLE V LEAVE PROVISIONS 43
Section 1. Sick Leave 43
A. Accumulation of Sick Leave 43
B. Sick Leave Earned 44
C. Permitted Uses of Sick Leave 44
D. Prohibited Uses of Sick Leave 45
E. General Provisions 45
Section 2. Bereavement Leave 46
Section 3. Authorized Leave Without Pay 47

~~A. Authority Leave ..... 47~~
~~B. Official Leave ..... 47~~
~~C. General Provisions ..... 48~~
~~Section 4. Official Leave for Non-occupational Disability ..... 49~~
~~Section 5. Absences Caused by Medical Conditions ..... 49~~
~~Section 6. Jury Duty Leave ..... 49~~
~~Section 7. Witness Leave ..... 49~~
~~Section 8. Absence Without Authorization ..... 50~~
~~Section 9. Workers' Compensation Leave ..... 51~~
~~Section 10. Parenthood Leave ..... 51~~
~~Section 11. Family Leave ..... 52~~
~~A. General Provisions ..... 52~~
~~B. Notification Requirements ..... 53~~
~~C. Verification ..... 53~~
~~Section 12. Catastrophic Leave ..... 53~~
~~A. Eligibility for Donations ..... 53~~
~~B. Request for Additional Donations ..... 54~~
~~C. Donation Procedure ..... 54~~
~~Section 13. Vacation ..... 55~~
~~A. Accumulation of Vacation ..... 55~~
~~B. Vacation Credit ..... 56~~
~~C. Maximum Allowable Vacation Credit ..... 57~~
~~D. General Provisions ..... 57~~
~~E. Vacation Time for Transitioning Employees ..... 58~~
~~Section 14. Paid Annual Leave for Employees in OCFAMA.....58~~

~~**ARTICLE VI HOLIDAYS ..... 60**~~
~~Section 1. Holidays Observed ..... 60~~
~~Section 2. Regular, Limited-Term, and Probationary Employees ..... 60~~
~~A. Holiday Compensation ..... 60~~
~~B. Eligibility for Holiday Pay ..... 61~~
~~C. Compensation for Work on Holidays ..... 61~~

~~**ARTICLE VII REIMBURSEMENT PROGRAMS ..... 62**~~
~~Section 1. Mileage Reimbursement ..... 62~~
~~Section 2. Personal Property Reimbursement ..... 62~~
~~Section 3. Tuition Reimbursement ..... 62~~

~~**ARTICLE VIII DISCIPLINARY AND PREDISCIPLINARY ACTIONS ..... 64**~~
~~Section 1. Reprimand or Denial of Performance Salary Increase ..... 64~~
~~Section 2. Disciplinary Hearing for Suspension, Reduction, or Discharge ..... 64~~
~~Section 3. Right of Appeal ..... 65~~
~~A. Suspension ..... 65~~
~~B. Reduction ..... 65~~
~~C. Discharge ..... 65~~
~~Section 4. Polygraph Examination ..... 66~~
~~Section 5. Appeal Procedure ..... 66~~
~~Section 6. Referrals to Arbitration ..... 68~~
~~Section 7. General Provisions ..... 70~~

~~ARTICLE IX GRIEVANCE PROCEDURE ..... 70~~
~~Section 1. Scope of Grievances ..... 72~~
~~Section 2. Basic Rules ..... 72~~
~~Section 3. Submission of Grievances ..... 73~~
~~Section 4. Employee Representation ..... 73~~
~~Section 5. Time Off for Processing Grievances ..... 73~~
~~Section 6. Informal Discussion ..... 74~~
~~Section 7. Formal Grievance Steps ..... 74~~
~~Section 8. Referrals to Mediation ..... 75~~
~~Section 9. Referrals to Arbitration ..... 75~~
~~Section 10. General Provisions ..... 76~~

ARTICLE II~~X~~ LAYOFF PROCEDURE 78
Section 1. General Provisions 78
Section 2. Order of Layoff 78
Section 3. Notification of Employees 79
Section 4. Voluntary Reduction in Lieu of Layoff 79
Section 5. Voluntary Reduction from Classes Designated as Vulnerable to Layoff 80
Section 6. Reinstatement Lists 80
Section 7. Status on Reinstatement 81

ARTICLE III~~XI~~ ON-THE-JOB INJURIES, WORKERS' COMPENSATION 83
Section 1. Medical Treatment 83
Section 2. Disability Payments and Leave 83
Section 3. Exposure to Contagious Diseases 84
Section 4. Injury to Volunteer Reserve Firefighter 84

ARTICLE IV~~XII~~ SAFETY 85
Section 1. General Provisions 85
Section 2. Abatement of Violations 85

~~ARTICLE XIII INSURANCE ..... 86~~
~~Section 1. CalPERS Health Care ..... 86~~
~~Section 2. Health Plan Enrollment ..... 87~~
~~Section 3. Other Insurance Coverage ..... 88~~
~~Section 4. Premium Only Plan ..... 89~~
~~Section 5. Retiree Medical Insurance Grant *("Defined Benefit Plan")* ..... 89~~
~~A. Retiree Medical Insurance Grant ..... 89~~
~~B. Eligibility Requirements for Retiree Medical Insurance Grant. 90~~
~~C. Employer Contribution ..... 91~~
~~D. Employee Contribution ..... 91~~
~~E. Survivor Benefits ..... 91~~
~~Section 6. Defined Contribution Plan for Retiree Medical Benefits ..... 92~~
~~Section 7. Physical Examination ..... 92~~
~~Section 8. Optional Benefit Plan (OBP) ..... 92~~

~~ARTICLE XIV UNIFORMS, PROPERTY, SERVICES, AND EQUIPMENT ..... 94~~
~~Section 1. Uniforms ..... 94~~

~~ARTICLE XV RETIREMENT ..... 95~~
~~Section 1. Contribution Rates and Benefit Levels ..... 95~~
~~Section 2. Employer's Contribution ..... 98~~

~~ARTICLE XVI DEFERRED COMPENSATION ..... 99~~
ARTICLE ~~X~~V~~II~~ DEPENDENT CARE ASSISTANCE PROGRAM 100

~~ARTICLE XVIII COMPENSATION ..... 101~~
~~Section 1. Range Adjustments ..... 101~~
~~Section 2. Specialty Pay ..... 103~~
~~A. Bilingual Pay ..... 103~~
~~Section 3. Range Constraints ..... 104~~
~~Section 4. Equity Adjustments ..... 104~~

~~ARTICLE XIX OCFAMA RIGHTS.....105~~

PART 3

EXECUTIVE MANAGEMENT

ARTICLE I TERMS AND CONDITIONS OF EMPLOYMENT FOR EXECUTIVE MANAGEMENT EMPLOYEES 106
Section 1. General Provisions 106
Section 2. At-Will Appointments 106
Section 3. Life Insurance 107
Section 4. Optional Benefit Plan (OBP) 107
Section 5. CalPERS Health Care 107
Section 6. Range Adjustment 109
Section 7. Deferred Compensation 109
Section 8. Authority Issued Vehicles and Cash In Lieu Allowance Policy 110
A. Intent of Policy 110
B. Authority issued vehicles 110
C. Vehicle Cash allowance 111
Section 9. Retirement Formula – 3% at 50 112
Section 10. Retirement Formula – 3% at 55 112
Section 11. Retirement Formula – 2.7% at 55 (Hired after Jan. 1, 2013) 113
Section 12. Retirement Formula – 2% at 55 (Hired prior to Dec. 1, 2102) 114
Section 13. Retirement Formula – 2% at 55 (Hired Dec, 1, 2012 to Dec. 31, 2013)……..... 115
Section 14. Retirement Formula – 2.5% at 67 (Hired after Jan 1, 2013)……116
Section 15. Retiree Medical Insurance Grant 116

PART 4

IMPLEMENTATION 117

APPENDIX A - EXECUTIVE MANAGEMENT CLASSIFICATIONS 118

APPENDIX B - ADMINISTRATIVE MANAGEMENT CLASSIFICATIONS 119

DEFINITIONS

The following terms as used in this Personnel and Salary Resolution shall, unless the context clearly indicates otherwise, have the respective meanings herein set forth:

ADMINISTRATIVE MANAGEMENT shall mean positions designated under Administrative Management as specified in Appendix B.

ASSISTANT CHIEF shall mean the Executive Management employee responsible for Business Services, Community Risk Reduction, Operations, Organizational Planning, or Support Services~~, or Fire Prevention~~.

AUTHORITY shall mean the Orange County Fire Authority (OCFA). The Authority is a joint powers agency that was created to discharge the functions of the Orange County Fire Department and which, effective March 1, 1995, became the successor organization to the Orange County Fire Department.

BOARD shall mean Board of Directors of the Authority.

BOARD OF RETIREMENT shall mean the Board of Retirement of the Orange County Employees Retirement System (OCERS).

COMPENSATION EARNABLE shall mean the employee's hourly rate of pay and any other compensation the employee receives that is used by the Orange County Employees Retirement System in calculating the employee's Average Monthly Compensation.

CONTINUOUS SERVICE shall mean employment in a regular position that has not been interrupted by resignation, discharge, or retirement. Official Leaves of Absence shall not constitute a break in continuous service. For employees who transitioned directly from the County of Orange to Authority employment prior to September 1, 1995, continuous service shall include prior continuous service with the County of Orange.

COUNTY shall mean the County of Orange and special districts governed by the Board of Supervisors.

DEPARTMENT shall mean a Department within the Authority such as Business Services, Community Risk Reduction, Operations, Organizational Planning~~Fire Prevention~~, and Support Services.

DEPARTMENT HEAD shall mean an executive manager of the Authority who is responsible for a Department within the Authority including~~(for example,~~ Assistant Chief of Operations, Assistant Chief of Business Services, Assistant Chief of Community Risk Reduction~~Fire Prevention~~, Assistant Chief of Organizational Planning, and Assistant Chief of Support Services~~)~~.

~~**DEPUTY FIRE CHIEF** shall mean the Executive Management employee who is the principal officer of the Authority in the absence of the Fire Chief.~~

ELIGIBLE FORMER EMPLOYEE means an Employee who meets the coverage and participation requirements set forth in Sections 3.2.1 and 3.2.2 of the Retiree Medical Plan at the time of his/her termination of employment with the Authority.

ELIGIBLE RETIREE means a retiree who is receiving a monthly retirement allowance from the Orange County employees Retirement System (OCERS), who meets the coverage and participation requirements set forth in Section 3.1 and 3.2 of the Retiree Medical Plan and whose coverage has not been terminated under Section 3.3 of the Retiree Medical Plan.

EMERGENCY shall mean an unforeseen circumstance requiring immediate action, a sudden unexpected happening, an unforeseen occurrence or condition, a pressing necessity.

EMPLOYEE shall mean a person employed by the Authority and covered by the terms of this Personnel and Salary Resolution, except where the natural construction of this Resolution otherwise indicates, and except elected officers and Volunteer Reserve Firefighters.

EXECUTIVE MANAGEMENT shall mean an employee employed in one (1) of the classes as listed in Appendix A.

EXTRA HELP EMPLOYEE shall mean an employee employed in an extra help position. An extra help employee serves at the pleasure of the Authority in an extra help position and may be removed from an extra help position at any time with or without notice or cause and without a hearing.

EXTRA HELP POSITION shall mean a position that is intended to be occupied on less than a year-round basis, including, but not limited to, the following: to cover seasonal peak workloads; emergency extra workloads of limited duration; necessary vacation relief, paid sick leave, and other situations involving a fluctuating staff. Ordinarily, a full-time extra help position shall not be authorized for a period exceeding six (6) months. In unusual circumstances, and at the discretion of the Fire Chief and the Human Resources Director, a full-time extra help position may be authorized for a period longer than six (6) months, provided such period shall not exceed one (1) year.

FIRE CHIEF shall mean the person who is the principal officer or employee of the Authority or his/her designee.

FIRE MANAGEMENT shall mean employees covered under the Fire Management Unit as referred to in the Memorandum of Understanding between the Orange County Fire Authority and the Orange County Fire Authority Chief Officers Association.

FISCAL YEAR shall mean a period from July 1 through June 30.

FULL-TIME EMPLOYEE shall mean an employee employed in a regular or limited-term position whose normally assigned work hours equal those of a full workweek or work period as described hereinafter.

GENERAL UNIT shall mean employees covered under the General Unit as referred to in the Memorandum of Understanding between the Orange County Fire Authority and Orange County Employees Association.

HUMAN RESOURCES DIRECTOR shall mean the Human Resources Director or his/her designee.

LIGHT DUTY ASSIGNMENT shall mean temporary modified (light duty) assignment as defined in SOP AM 103.01B.

LIMITED-TERM EMPLOYEE shall mean an employee employed in a limited-term position, except where a regular position is converted to a limited-term position, in which case, the incumbent shall retain his/her former status. As an exception to this definition, a limited-term employee may also be used to fill a regular position when the incumbent employee is on Official Leave of Absence.

LIMITED-TERM POSITION shall mean a position that the Authority has determined has no anticipated long-range funding or has uncertain future funding.

OCFA shall mean the Orange County Fire Authority.

PART-TIME EMPLOYEE shall mean an employee employed in a regular or limited-term position whose normally assigned work hours do not equal those required of a full-time employee.

PRACTICABLE shall mean economically or operationally feasible or reasonably able to accomplish.

PROBATIONARY EMPLOYEE shall mean a person who is serving a probation period and is employed in a regular or limited-term position.

PROMOTION shall mean the movement of a regular, limited-term, or probationary employee from one (1) class to another class where the maximum rate on the new salary range is at least two and seventy-five hundredths (2.75) percent higher than the maximum rate of the old salary range.

PROVISIONAL APPOINTMENT shall mean an appointment of a qualified person who is not a regular, probationary, or limited-term employee of the Authority to a regular or limited-term position on a temporary basis.

PROVISIONAL EMPLOYEE shall mean an employee who occupies a regular or limited-term position as the result of a provisional appointment.

RATING YEAR shall mean that time period considered in the preparation of annual performance evaluations under the Annual Merit Review Program. ~~The time period shall normally be September 1 through August 31.~~

REASSIGNMENT shall mean the movement of a regular, limited-term, or probationary employee from one (1) class to another class on the same salary range or to a class where the maximum rate on the new salary range is less than two and seventy-five hundredths (2.75) percent higher or lower than the maximum rate of the old salary range.

RECRUITING RATE shall be the minimum rate of the salary range allocated to a class, unless otherwise authorized by the Board or the Human Resources Director.

REDUCTION shall mean the movement of a regular, limited-term, or probationary employee from one (1) class to another class where the maximum rate of the new salary range is at

least two and seventy-five hundredths (2.75) percent lower than the maximum rate of the old salary range.

REEMPLOYED EMPLOYEE shall mean an employee who is reemployed by the Authority in accordance with the eligibility requirements identified in the OCFA Selection Rules and Appeals Procedure.

REGULAR EMPLOYEE shall mean a person who is not on probation and is employed in a regular or limited-term position.

REGULAR POSITION shall mean a position established on a permanent year-round basis requiring work on a regular schedule, unless otherwise authorized by minute order of the Board.

REINSTATED EMPLOYEE shall mean an employee who is reinstated by the Authority in accordance with the LAYOFF PROCEDURE.

SENIORITY shall mean total continuous full-time equivalent service as a regular employee, unless the context herein indicates otherwise.

SERVICE for the purpose of determining benefits under the Retiree Medical Insurance Grant shall mean service for the Authority, and shall include service for the County of Orange, if the employee/retiree transitioned directly from County employment to Authority employment no later than September 1, 1995, and has been continuously employed by the Authority until retirement. When the word SERVICE is printed in all uppercase letters, it refers to this definition.

SOP shall mean Standard Operating Procedure.

SUPERVISORY MANAGEMENT UNIT shall mean employees covered under the Supervisory Management Unit as referred to in the Memorandum of Understanding between the Orange County Fire Authority and the Orange County Employees Association.

SUPPORTED EMPLOYMENT UNIT shall mean employees who have been referred to the Authority by Goodwill Industries and accepted by the Authority as program participants.

Y-RATE shall mean a pay rate outside of the assigned salary range of a class.

PART 1
ARTICLE I

GENERAL PERSONNEL PROVISIONS

Section 1. Regulation of Employees

A. There is hereby adopted a merit system for the personnel administration of this Authority basing appointments, promotions, reductions, and discharges specifically on merit for all employees, except for extra help employees, Senior Executive Assistant to the Fire Chief, and appointments and promotions to Executive Management positions.

B. All employees shall hold their positions subject to rules and regulations established by Resolution of the Board.

Section 2. Conflict of Interest

A. Authority employees shall refrain from engaging in any activities that constitute a conflict of interest due to the nature, conditions, or some other aspect of the activity. It shall be the responsibility of the Fire Chief to ensure that employees in the Authority refrain from engaging in any activities that constitute a conflict of interest. The following are examples of activities that may involve a conflict of interest:

1. The use of Authority time, facilities, equipment, badge, or uniform for private gain or advantage, or private gain or advantage of another.

2. The use of prestige or influence of Authority employment for private gain or advantage, or the private gain or advantage of another.

3. The use of confidential information acquired by virtue of Authority employment for the employee's private gain or advantage, or private gain or advantage of another.

4. The acceptance of money or other consideration by an employee from any person, except the Authority for the performance of an act that the employee would be required or expected to render in the regular course or hours of his/her Authority employment, or as a part of his/her duties as an Authority employee.

5. The performance of an act in other than his/her capacity as an Authority employee knowing that such act may later be subject directly or indirectly to the control, inspection, review, audit, or enforcement by the employee or the Authority.

6. The representation of or assisting in the representation of private interests for profit before any board or committee of the Authority or in court when the Authority is a party.

7. The solicitation of future employment with a business doing business with the Authority over which the employee has some control or influence in his/her official capacity at the time of transaction.

Section 3. Employment of Relatives

A. Purpose

1. To provide guidelines for employment of close relatives as situations involving relatives working in the Authority may result in morale problems, inappropriate supervision, conflict of interest, or public criticism. The intent is to avoid the opportunity for an officer or employee of the Authority to use personal influence to aid or hinder another in the employment setting or situation because of a personal relationship.

B. Policy

1. General: No person may be appointed, promoted, reduced, transferred**,** or reassigned to a position in which that person is in the direct line of supervision of a close relative; nor shall close relatives have the same immediate supervisor. "Supervision" includes the assignment of work, evaluation of performance, and setting or influencing the pay or granting of benefits to the other.

2. Definition: A close relative shall be defined as an individual related by blood, adoption, or marriage, e.g., spouse, parent, child, sibling, grandparent, grandchild, uncle, aunt, first cousin, nephew, niece, mother/father in-law, son/daughter in-law, sister/brother in-law, step-parent, step-child, step-brother/sister or half-brother/sister.

3. Disclosure: All applicants for employment, promotion, reduction, transfer, or reassignment to a position in the Authority shall be required to disclose the name(s) and position title(s) of any close relative currently employed in the Authority prior to appointment, promotion, reduction, transfer, or reassignment. An employee who becomes a "close relative" by marriage subsequent to appointment shall disclose the new relationship(s) to his/her supervisor.

4. The Human Resources Director shall provide appropriate forms and procedures for the disclosure process.

5. Exemptions: The Fire Chief may grant exemptions required for the effective and efficient operation of the Authority. The Fire Chief shall develop appropriate procedures to ensure the objective review of requests for exemption.

C. Procedure for Exemption From Policy

1. The hiring supervisor shall request authority for an exemption from policy from the Fire Chief prior to appointing, promoting, reducing, transferring, or reassigning a close relative of an employee, if such action shall result in a violation of policy above.

2. The written request for exemption from policy shall include:

   a) Names of prospective employee and known close relative employee(s) and relationship(s).

   b) Titles and summary of duties, and work relationship of affected positions.

   c) Qualifications of applicant indicating why the selected applicant is the best qualified or better qualified than other candidates.

   d) Justification for exemption, indicating why it is necessary for the effective and efficient operation of the Authority and including a statement of why supervisor believes problems shall not result.

3. The Fire Chief shall approve or disapprove supervisor's recommendation and notify the Human Resources Director of specific reasons for decision. Upon request, the Human Resources Director shall review and provide comments to the Fire Chief. The Human Resources Director shall maintain a listing of exemptions granted after the effective date of this policy.

4. When an exemption is granted for a close relative of the Fire Chief, the Board shall be promptly notified.

Section 4. Drug and Alcohol Policy

A. Purpose

It is the purpose of this policy to articulate the position of the Authority Board with respect to the use of drugs or alcohol by Authority employees while on Authority time, in Authority vehicles, on Authority property, or in Authority facilities.

B. Policy

In recognition of the duties entrusted to the employees of the Authority and with knowledge that drugs and alcohol do hinder a person's ability to perform duties safely and effectively, the Board adopts the following policy:

1. It is the policy of the Authority to maintain a safe, healthful, lawful, and productive workplace. Members of the Board are committed to discouraging alcohol and drug abuse and to achieving a workforce free from the influence of drugs and alcohol.

2. It is the intent of this policy to deter the misuse or abuse of legal or illegal substances that create a threat to the safety and health of any Authority employee or member of the public. The Authority is concerned with those situations where the use of alcohol and drugs interferes with any employee's safety and job performance, adversely affects the job performance or safety of other employees, or affects the safety of the public.

3. The Authority has established a voluntary Employee Assistance Program to assist all Authority employees who wish to seek help for alcohol and drug problems. The Authority also makes available a variety of insurance coverage that provides treatment for drug and alcohol abuse. Employees may contact their supervisors, insurance provider, or the Employee Assistance Program for additional information.

4. The use, possession or sale of illegal drugs is unlawful, dangerous**,** and prohibited. The use of alcohol in the workplace, or prior to coming to the workplace so that the employee's performance is impaired is dangerous to the employee, to other employees, and the general public and is prohibited. The abuse of all drugs, including alcohol by employees is unacceptable since it can adversely affect health and safety, security and productivity, as well as public confidence and trust.

5. Violation of this policy may be grounds for disciplinary action up to and including discharge from Authority service. The Authority may develop additional policies or work rules to augment the above policy statement.

6. Employees who experience drug or alcohol problems are encouraged to seek referral for rehabilitation through the Employee Assistance Program (EAP) or their insurance provider. It is the responsibility of each employee to seek assistance before alcohol or drug problems lead to performance problems. Once a violation of this policy occurs, subsequent use of the Employee Assistance Program or other programs on a voluntary basis shall not necessarily lessen disciplinary action.

Section 5. Position Classification Plan

A. The Position Classification Plan of the Authority shall consist of the class titles and the class specifications adopted by the Board. There shall be a class specification for each class (unless exempted by the Board) that includes the title of the class and indicates the type of work performed and the minimum qualifications for employment. Class specifications shall be established by the Board of Directors and maintained current by the Human Resources Director in the following areas: 1) legal requirements for licensure, 2) Fair Labor Standards Act (FLSA) mandates, and 3) organizational changes to reporting relationships.

B. The Human Resources Director shall administer the Position Classification Plan for all positions in the Authority service, except those designated by the Board as being exempted. The Human Resources Director shall make recommendations to the Board as to the establishment of classes. The Human Resources Director shall establish procedures to administer the Position Classification Plan.

C. The Human Resources Director is authorized to conduct studies of the duties and responsibilities of the various positions in order to maintain the Position Classification Plan.

Section 6. Number and Classification of Activated Positions

A. The number of activated regular positions shall be as designated by the Board. The Fire Chief shall not appoint regular or probationary employees in excess of the positions activated by the Board, except that the Fire Chief, with notification to the Human Resources Director, may fill a regular position with a replacement up to twenty-eight (28) calendar days in advance of the separation of a terminating employee.

B. The Human Resources Director is authorized to reclassify positions when such reclassifications are consistent with classification concepts, classification specifications, and salaries adopted by the Board, and the Fire Chief agrees with the classification change.

C. The Human Resources Director may authorize that a regular position be used as one (1) or more part-time regular positions, provided that the total regularly scheduled hours of the part-time positions do not exceed the number of hours per week authorized for the activated regular position.

D. The Fire Chief may appoint limited-term or extra help employees subject to a determination by the Human Resources Director as to the appropriate classification of the positions. Ordinarily, a full-time extra help position shall not be authorized for a period exceeding six (6) months. In unusual circumstances, and at the discretion of the Fire Chief and the Human Resources Director, a full-time extra help position may be authorized for a period longer than six (6) months, provided such period shall not exceed one (1) year.

E. When a regular or limited-term position is vacant due to Leave of Absence, the position may be filled for the length of the immediately preceding Authority Leave, Official Leave, Leaves for disability reasons, Military Leave, Parenthood Leave, or other loan program and any extensions of such Leaves.

F. When an employee who is separating from Authority service by way of paid Authority retirement elects to take time off for vacation, the position to be vacated may be filled by the Authority for the length of vacation time off prior to the employee's paid retirement.

G. When a regular or limited-term employee is on a Leave of Absence with Pay and the cost of the employee's salary and benefits is fully reimbursed to the Authority, the employee's position may be filled by the Authority for the length of the paid Leave.

Section 7. Selection Procedures

A. Consistent with Section 1.A. of this Article, the Human Resources Director shall determine the method of evaluating the qualifications of applicants and employees. The Human Resources Director shall administer the Authority Merit System Selection Rules and Appeals Procedure. Such Rules may be revised by the Human Resources Director, provided that no revision that

nullifies the basic principle of a merit system shall be effective, unless approved by the Board.

B. Consistent with Section 1.A. of this Article, the Human Resources Director shall determine the selection methods for the filling of all positions. The Fire Chief shall appoint and promote only from among those persons who are certified to him/her by the Human Resources Director as being eligible for the particular class, except as provided in the Authority's Merit System Selection Rules and Appeals Procedure. An appropriate form shall be signed by the Fire Chief or his/her designee and approved by the Human Resources Director before salary payment shall be made to any employee.

C. When the Authority assumes or absorbs the functions and personnel of another government agency, the Human Resources Director may waive or modify the regularly established minimum qualifications and selection procedures for the employees involved.

Section 8. Performance Evaluations

A. The Human Resources Director is authorized to establish a performance evaluation program for the Authority.

Section 9. Administrative Leave

A. The Human Resources Director may authorize an employee to be absent with pay from his/her regular work area for reasons other than physical or mental illness for a period of time not to exceed one hundred twenty (120) regularly scheduled working hours, if the Fire Chief finds that such absence:

1. Contributes to the employee's effectiveness in his/her assigned duties and responsibilities; or

2. Contributes to the functions and goals of the Authority.

B. An employee may be absent with pay from his/her regular work area in excess of one hundred twenty (120) regularly scheduled working hours upon the approval of the Human Resources Director and the Fire Chief. Requests for an absence with pay from the regular work area in excess of one hundred twenty (120) regularly scheduled hours shall state specifically the reason for the request and the beginning and ending dates of the absence. For purposes of this Section, regular work area shall mean the geographic area to which the employee is typically and appropriately assigned to work during the usual course of employment.

Section 10. Military Leave of Absence

A. A request for Military Leave of Absence shall be made upon forms prescribed by the Human Resources Director and shall state specifically the reason for the request, the date when it is desired to begin the Leave of Absence, and the probable date of return. Military Leave is governed by provisions of the Military and Veterans Code of the State of California. An employee receiving pay for a

portion of such Leave shall not be deemed to be occupying a position during such paid Leave period. When a regular position is vacant due to a Military Leave of Absence, the position may be filled for the length of that Leave.

Section 11. Time Off for Voting

A. If an employee does not have sufficient time outside of working hours to vote at a State-wide election, the employee may, without loss of pay, take off enough working time that when added to the voting time available outside of working hours shall enable the employee to vote.

B. No more than two (2) hours of the time taken off for voting shall be without loss of pay. The time off for voting shall be only at the beginning or end of the regular working shift/day, whichever allows the most free time for voting and the least time off from the regular working shift/day, unless otherwise mutually agreed.

C. If the employee on the third working day prior to the day of election, knows or has reason to believe that time off shall be necessary to be able to vote on election day, the employee shall give his/her supervisor at least two (2) working days' notice that time off for voting is desired in accordance with the provisions of this Section.

Section 12. Provisional Appointment

A. A provisional appointment shall not extend beyond the time needed to establish an eligible list and permit a regular appointment to be made. A provisional appointment shall not be continued for more than six (6) months from date of appointment, unless an extension of no more than one (1) year from the original date of the provisional appointment is approved by the Human Resources Director.

B. A probationary, regular, or limited-term employee shall not be eligible for a provisional appointment.

C. A provisional employee shall not serve a probationary period. If a provisional employee receives a regular appointment, the employee shall serve a new probationary period. A provisional employee who receives a regular appointment shall maintain his/her original hire date for purposes of vacation and sick leave accrual, retirement, and layoff.

D. A provisional employee may be released from service at any time without right of appeal or hearing.

E. Provisional employees shall earn all other benefits that accrue to regular employees, except for rights and benefits pursuant to the Layoff Procedure provided for in the applicable Memoranda of Understanding or Personnel and Salary Resolution.

~~**Section 13. At-Will Appointment**~~

~~A. Notwithstanding any other provision of this Personnel and Salary Resolution, an employee appointed to the position of Human Resources Director and Director of Communications shall serve at the pleasure of the Fire Chief. Prior to such an appointment, the Deputy Fire Chief shall obtain written acknowledgement from the prospective appointee acknowledging his/her understanding of such At-Will status.~~

~~B. The provisions of Part 3, Article I, Sections 2.B. and 2.C. also apply to the positions of Human Resources Director and Director of Communications.~~

ARTICLE II

PAY PRACTICES

Section 1. Method of Compensation for Employees

A. Employees shall receive compensation at the biweekly or hourly rate within the range or at the flat rate assigned to the class in which they are employed.

B. The Human Resources Director is authorized to create a table of class titles, pay rates, and salary schedules consistent with actions taken by the Board authorizing such titles and rates of pay. The Human Resources Director may also change such tables, rates, and schedules in accordance with the provisions of the various Memoranda of Understanding or by subsequent action of the Board.

Section 2. Salary Payment Procedure

A. A pay period shall cover fourteen (14) calendar days and shall start on a Friday and end with the second Thursday thereafter. Employees and officers shall be paid approximately eight (8) days after the end of a pay period, usually on a Friday.

B. Compensation for each employee for whom compensation is established shall be paid out of the Authority General Fund or such other fund as may be provided by ordinance or by law upon certification by the Fire Chief that such employee has performed the services set forth in said certificate. When an employee separates from the Authority service and use of the regularly scheduled certification would create an inequitable delay, the Fire Chief may immediately file a special payroll certification of such separation. A warrant may be drafted for the period of time and/or pay due said employee up to the time of separation. Notice of such separation shall be immediately filed with the Human Resources Director.

C. As a condition of receipt of his/her salary warrant, the Fire Chief shall file a written certificate to the effect that each of his/her employees during said pay period has performed services for the Authority as required by law. If there is any exception, the Fire Chief shall so state in the certificate. The Authority shall retain a copy.

Section 3. Authorization for Salary Increases

A. The Human Resources Director shall provide written notification to the Finance Manager of all salary increases and such notifications shall constitute authorization for payments to the employee at the higher rate.

~~Section 4. Salary on Employment as a Fire Crew Worker~~

~~A. Within the limits of funds budgeted for that purpose and when necessary for the protection of life and property, the Fire Chief may employ Fire Crew Workers at the hourly recruiting rate, and the signature of the Fire Chief or~~

~~authorized deputy on the payroll certificate shall constitute authority for payment to the Fire Crew Workers listed on the payroll certificate.~~

Section ~~4~~5. Compensation for Authority Employees When Performing as Volunteer Reserve Firefighters

A. Employees who, in addition to being employed in another job class, also volunteer as Volunteer Reserve Firefighters shall be excluded from eligibility for overtime compensation during such time when they volunteer as Volunteer Reserve Firefighters.

Section ~~5~~6. Limitations upon Compensation

A. Unless otherwise provided by Resolution, all fees, commissions, mileage (other than mileage reimbursement received pursuant to the Authority's mileage reimbursement provisions), and compensation of whatever nature or character received by an employee by virtue of his/her office shall be deposited with the Authority for each calendar month not later than the fifth of the succeeding month and be deposited into the General Fund of the Authority, or such other fund as may be provided by law, and shall become the property of the Authority immediately upon its receipt by such employee. The provisions of Section 70 of the Penal Code relative to the asking or receiving of gratuities are hereby made a part of the regulations governing employees.

Section ~~6~~7. Authority to Resolve Employee Complaints/Grievances

A. The Human Resources Director may authorize payments in settlement of employee complaints or grievances where:

1. Resolution of the complaint advances effective employer-employee relations; and

2. The cost of potential arbitration or litigation exceeds the amount in controversy; and

3. The amount of such settlement does not exceed ten thousand (10,000) dollars in any one (1) case.

ARTICLE III

TUITION REIMBURSEMENT

Section 1. Objective

A. The tuition reimbursement program is designed to encourage employees to continue their self-development by enrolling in classroom courses that will:

1. Educate them in new concepts and methods in their occupational fields and prepare them to meet the changing demands of their jobs; or

2. Help prepare them for advancement to positions of greater responsibility in the Authority service.

Section 2. Eligibility of Courses

A. The following criteria shall be used in determining the eligibility of courses for tuition reimbursement:

1. Courses must be related to the work of the employee's position or occupation.

2. Courses must have reasonable potential for resulting in savings or in more efficient service.

3. Courses must be taken on employee time.

4. Courses must be taken at accredited institutions. Correspondence courses from reputable institutions shall be considered only when equivalent courses are not available at local accredited schools, or when the employee's circumstances prevent attendance at courses offered locally.

5. The prerequisite courses for eligible courses are also eligible for tuition reimbursement. However, reimbursement shall not be made until the appropriate eligible courses have been satisfactorily completed.

6. Courses that are neither eligible in themselves, nor prerequisites for eligible courses, but that are required for the completion of a degree in a work-related field are eligible for tuition reimbursement.

7. Courses are not eligible for tuition reimbursement if they:

   a) Are taken to bring unsatisfactory performance up to an acceptable level;

   b) Are taken to acquire skills or knowledge that the employee was deemed to have when appointed;

   c) Duplicate available in-service training; or

d) Duplicate training that the employee has already had.

B. Conventions, nonacademic workshops, institutes, etc., are not ordinarily included in the tuition reimbursement program because such programs often are given by non-accredited institutions, involve Authority time, considerable travel expense, and are not easily comparable to any other programs. Therefore, the Transportation and Travel-Meetings and Conferences account code shall be used for such programs and requests shall be made in the usual manner. However, with the approval of the Human Resources Director, exceptions may be made for individual requests if: 1) an employee can only receive a specialized course from a nontraditional institution, and 2) the program meets the other criteria previously outlined.

Section 3. Eligibility of Employees

A. Full-time (regular, limited-term, and probationary) employees performing their jobs satisfactorily are eligible for reimbursement.

Section 4. Nature of Reimbursement

A. Reimbursement may be made for tuition, registration fees, books, and laboratory fees. Expenses for parking, travel, meals, processing fees for admittance to a university or college, and other incidental costs are not reimbursable.

B. Reimbursement shall be made to the employee upon completion of the course with a minimum final grade of "C" or its equivalent in an undergraduate course, or "B" or its equivalent in a graduate level course. No reimbursement shall be made for audited courses or incomplete courses.

C. Reimbursement shall be limited as follows:

1. No employee shall be reimbursed for more than two (2) courses in a single semester or quarter.

2. ~~Except as provided in Section 4.C.3. of this Article, t~~The maximum reimbursement that may be received by an employee from the Authority in one (1) fiscal year shall be as provided in the applicable Memorandum of Understanding for each bargaining unit ~~shall be two hundred (200) dollars. It is intended that this program be administered to assist as many qualified employees as possible and the two hundred (200) dollars mentioned above is established as a maximum and not as a guarantee.~~

~~3. The maximum reimbursement that may be received in one (1) fiscal year by an employee in the Supervisory Management Unit shall be five hundred fifty (550) dollars, with the first three hundred (300) dollars in expenses being reimbursed at one hundred (100) percent and the next five hundred (500) dollars of expenses being reimbursed at fifty (50) percent. The maximum reimbursement that may be received in one (1) fiscal year by an employee in the General Unit shall be three hundred (300) dollars. The maximum tuition reimbursement for Supervisory Management Unit employees and General Unit employees as specified~~

~~above shall expire on June 30, 2002. Effective July 1, 2002, the maximum tuition reimbursement for Supervisory Management Unit employees and General Unit employees shall be provided in the applicable Memorandum of Understanding. The maximum tuition reimbursement for Fire Management Unit employees shall be provided in the applicable Memorandum of Understanding. The maximum tuition reimbursement for Administrative Management employees and Executive Management employees shall be provided in Part 2, Article VII, Section 3. of the Personnel and Salary Resolution.~~

~~4.~~3. No employee shall be reimbursed for expenses totaling less than five (5) dollars for a single course.

~~5.~~4. Reimbursement received from other sources for tuition, registration fees, books, and/or lab fees shall be deducted from the cost of such expenses in determining the amount that the Authority shall pay.

Section 5. Request Procedure

A. The employee shall apply for tuition reimbursement through normal supervisory channels on forms provided by the Human Resources Director within thirty (30) calendar days after the starting date of the course.

B. The Human Resources Director or his/her designee shall either approve or deny the application based on the criteria set forth in this policy and in the Tuition Reimbursement Guide.

C. Upon completion of an approved course, the employee shall submit verification of fees paid, books purchased, and grades achieved for reimbursement in accordance with the Authority's tuition reimbursement process through normal supervisory channels.

ARTICLE IV

PAYOFF PROVISIONS

Section 1. Sick Leave Payoff

A. If applicable, the amount of the payment for unused sick leave shall be calculated ~~on the same basis as employee's retirement is calculated pursuant to Government Code Section 31462.1 or~~ on the basis of the employee's salary at the time of paid Authority retirement or death~~, whichever is greater~~. Extra help employees are not eligible for sick leave payoff.

Section 2. Vacation Payoff

A. The amount of the lump sum payment for accrued vacation shall be calculated ~~on the same basis as employee's retirement is calculated pursuant to Government Code Section 31462.1 or~~ on the basis of the employee's salary at the time of separation~~, whichever is greater~~.

ARTICLE V

INSURANCE FOR VOLUNTARY RESERVE FIREFIGHTERS

Section 1. Insurance for Volunteer Reserve Firefighters

A. The Authority shall provide to Volunteer Reserve Firefighters health and welfare benefits that shall include life, accidental death and dismemberment, vision, and dental benefits. Accidental death and disability income protection benefits shall be provided for enrolled Volunteer Reserve Firefighters.

ARTICLE VI

SUPPORTED EMPLOYMENT PROGRAM

Section 1. Program Intent

A. As part of its community involvement, the Authority participates in the Supported Employment Program administered by Goodwill Industries. The purpose of this program is to assist developmentally disabled adults in job training and placement. Individuals referred to the Authority by Goodwill Industries and accepted by the Authority as program participants shall be placed in positions specifically created for this program and shall serve in an "At-Will" capacity.

Section 2. Program Participants

A. Participants in this program shall become employees of the Authority and shall be placed in the classification of Services Aide, which shall be in the Supported Employment Unit exclusively designated for this program. The salary for this classification has been set in accordance with the Authority's salary policy and shall be maintained at the level of one (1) dollar above the State minimum wage requirement.

Section 3. Insurance

A. Employees in this program are eligible for Medical Health and Dental Insurance.~~the following benefits:~~

The employee may elect to participate in the OCFA medical health and dental insurance program. If the employee elects to participate ~~in the OCFA medical health insurance program~~, the Authority shall contribute one hundred percent (100%) toward the employee's insurance premium for employee-only coverage.

Section 4. Retirement

A. Eligibility

Employees in this program are included in the Orange County Employees Retirement System (OCERS) as determined by their date of entry into eligible service.

B. Employer's Contribution

For employees hired before January 1, 2013 and for employees hired on or after January 1, 2013 who are considered "Legacy Members" of OCERS within the meaning of the Public Employees' Pension Reform Act of 2013 (PEPRA), the Authority shall contribute one hundred percent (100%) of the employee's retirement contribution, exclusive of the six percent (6%) employee reimbursement ~~benefit~~ identified in

Section D.1.b~~2.b., of this Article~~. Such contribution shall be credited as fifty percent (50%) pursuant to Government Code Section 31581.1 and fifty percent (50%) pursuant to Government Code Section 31581.2.

C. Final Compensation for Legacy Members of OCERS

"Final Compensation" for Legacy Members of OCERS, in accordance with Government Code Section 31462(a) means the average annual compensation earnable by a member during any three years elected by a member at or before the time he or she files an application for retirement, or, if he or she fails to elect, during the three years immediately preceding his or her retirement. If a member has less than three years of service, his or her final compensation shall be determined by dividing his or her total compensation by the number of months of service credited to him or her and multiplying by 12.

D. Retirement Formulas and Employee Contributions

1. Employees Hired Prior to January 1, 2013 or Employees Hired On or After January 1, 2013 with Reciprocal Retirement Benefits

a. The Authority will continue the retirement formula of 2.7% at Age 55 as follows:

b. The employees will continue to pay ~~assume the total cost of the benefit, which includes the Employer's Contribution Rate and Employee's Contribution Rate, calculated to total~~ six percent (6%) of the employee's Compensation Earnable. This deduction shall continue during the employee's employment period with the Authority.

B. Employees Hired On or After January 1, 2013 with No Reciprocal Benefits

a. The retirement formula will be the 2.5% at age 67 retirement formula per Government Code Section 7522.20(a), utilizing the average three highest years of compensation per Government Code Section 7522.32. Pensionable compensation and other pension related conditions are governed by the provisions of PEPRA and the OCERS Board of Retirement.

~~a.~~b. Employees shall pay one half the normal cost as defined by PEPRA.

Section 5. Other Benefits

A. Vacation

Employees shall accrue eighty (80) hours of vacation prorated annually based on the number of hours worked. Employees shall not be eligible to apply vacation to absences until completion of one (1) year of service.

~~Employees hired prior to July 1, 2002, shall be credited with eighty (80) hours vacation, and may apply such credited hours toward absences effective July 1, 2002.~~ Vacation may be accrued up to a maximum of two hundred eighty (280) hours.

B. Sick Leave

Employees shall accrue a minimum of three (3) days and up to seventy-two (72) hours of sick leave prorated annually based on the number of hours worked. Employees shall not be eligible to apply sick leave to absences until completion of ninety (90) days of service. ~~Employees hired prior to July 1, 2002, shall be credited with seventy-two (72) hours of sick leave, and may apply such credited hours toward absences effective July 1, 2002.~~ There shall be no limit on the maximum of accrued sick leave.

C. Holiday Pay

Holiday pay shall be compensated in the same manner as is applicable to the majority of staff employees.

D. Individuals in this program may qualify for and may receive assistance from the State and/or Federal government relative to benefits. The Authority may, at its absolute discretion, provide other benefits to individuals employed in these classifications as determined in writing by the Fire Chief.

ARTICLE VII

SEPARABILITY

In the event that any provision of this Personnel and Salary Resolution is declared invalid by any court of competent jurisdiction, such decision shall not invalidate the entire Personnel and Salary Resolution, it being the express understanding of the Board of Directors that all other provisions not declared invalid shall remain in full force and effect.

PART 2
ADMINISTRATIVE MANAGEMENT
~~ARTICLE I~~

~~WORK HOURS~~

~~Section 1. Work Hours~~

~~A. The official workweek or work period for employees shall be as follows:~~

~~1. The official work period for full-time employees shall start on a Friday and end on the second Thursday thereafter. Employees are not governed by the customary eighty (80) hour work period and may be expected to work more than eighty (80) hours in a given work period or allowed to work less than eighty (80) hours pursuant to the specific dictates of the assignment. The Fire Chief shall regulate said work periods based on the needs of the Authority with due regard to maintaining reasonable and equitable work periods for all employees.~~

~~2.~~1. ~~The official workweek for a part-time employee shall be less than a full-time employee. The official work period shall start on a Friday and end on the second Thursday thereafter.~~

~~ARTICLE II~~

~~PAY PRACTICES~~

~~Section 1. Compensation for Employees~~

~~A. Full-time employees shall receive compensation on a salary basis at a biweekly rate within the range assigned to the class in which they are employed for each scheduled full pay period worked as determined by Part 2, Article I, Section 1.A. Compensation for pay periods in which full-time employees did not work the full schedule determined pursuant to Part 2, Article I, Section 1.A. shall be paid on a prorated salary basis. Compensation for part-time employees and extra help employees shall be based on an hourly rate equal to one-eightieth (1/80) of the biweekly rate, and shall not exceed eighty (80) hours in a pay period.~~

~~B. If any employee is required to work an unusually large number of hours as a result of natural disasters and/or officially declared emergencies such as floods, fires, storm conditions, high tides, etc., or due to extraordinary circumstances such as special projects, excessive call backs, etc., the Fire Chief any Assistant Chief or Department Head may authorize additional compensation for such an employee or group of employees whom the Fire Chief, any Assistant Chief or Department Head determines should receive additional compensation. The rate of such compensation shall be equal to one-eightieth (1/80) of the employee's regular biweekly pay rate for the hours in excess of eighty (80) hours in a pay period. The Fire Chief, any Assistant Chief or Director may also authorize Management Administrative Leave (MAL) for members of the OCFAMA bargaining unit in lieu of compensation provided within this paragraph. MAL will not have cash value and cannot be cashed out (as permitted per agreement by Labor Code section 227.3) at any time including at the end of employment. MAL can be used just like vacation by making a request to use it with each employee's supervisor.~~

~~C. Notwithstanding any other provisions contained herein, employees declared by the Human Resources Director to be exempt from the Fair Labor Standards Act shall not be docked salary for partial day absences so long as that exempt status continues to apply and so long as the Fair Labor Standards Act is applicable to the Authority.~~

~~Section 2. Pay for New Employees~~

~~A. The Human Resources Director may authorize the appointment of employees at any rate up to the middle of the salary range. Such appointment may be made only when, at the discretion of the Human Resources Director, there is a direct and measurable benefit to the Authority for such appointment.~~

~~B. The Fire Chief may authorize the appointment of employees at any rate within the salary range. Such appointment may be made only when, at the discretion of the Fire Chief, there is a direct and measurable benefit to the Authority for such appointment.~~

~~Section 3. Annual Merit Review Program~~

~~A. The Annual Merit Review Program establishes the award of performance salary increases to eligible employees. The Annual Merit Review Program shall be administered as follows:~~

~~1. The annual performance rating period shall be September 1 through August 31.~~

~~2. Individual employees may be rated "Substandard," "Standard," or "Above Standard."~~

~~3. Performance salary increases shall be awarded as follows:~~

~~Rating~~	~~Performance Salary Increase~~
~~Substandard~~	~~None~~
~~Standard~~	~~2.75% increase not to exceed the top of the salary range~~
~~Above Standard~~	~~5.5% increase not to exceed the top of the salary range~~

~~4. Performance salary increases shall be effective on the first day of the first pay period that includes September 1, regardless of the date the reviews are completed. The following dates reflect the effective pay period as described in this provision:~~

~~Performance Salary Increase Effective Date~~	~~Pay Period #~~
~~August 23, 2013~~	~~19~~
~~August 22, 2014~~	~~19~~
~~August 21, 2015~~	~~19~~

~~5. Performance salary increases within a range shall not be automatic. They shall be based upon job performance and granted only upon the affirmative recommendation of the employee's supervisor with the approval of the next level supervisor.~~

~~B. Eligibility for Annual Merit Review Program~~

~~1. Except as provided in Section 3.B.2. of this Article, all regular, limited-term, and probationary employees are eligible to receive performance salary increases through the Annual Merit Review Program.~~

~~2. An employee hired or promoted into an Administrative Management classification on or after March 1 shall not be eligible to receive a performance salary increase during his/her first performance rating year period of employment or promotion.~~

3. All employees affected by Section 3.B.2. of this Article shall be eligible for performance salary increases the next subsequent performance rating year period.

4. Part-time employees shall be eligible for performance salary increases upon completion of two thousand eighty (2080) hours of employment. Performance salary increases shall be effective the first day of the pay period following the completion of said period.

Section 4. Salary on Promotion

A. Except as modified by Sections 4.B. and 4.C. of this Article, a regular, limited-term, or probationary employee promoted to a position in a class with a higher salary range shall receive the higher of the following rates:

1. The recruiting rate for the higher class; or

2. A five and five-tenths (5.5) percent increase over the salary received prior to promotion.

B. Any employee who is promoted to a class from which the employee was previously reduced without a salary decrease shall be placed at a salary rate no higher than the rate that the employee would have achieved if the employee had remained in the class to which he/she is promoted and had demonstrated at least standard performance.

C. Any other provision of this Personnel and Salary Resolution notwithstanding, a regular, limited-term, or probationary employee who is promoted may receive a salary increase of up to fifteen (15) percent when authorized by the Fire Chief upon recommendation of the Human Resources Director.

Section 5. Salary on Reassignment

A. When a regular, limited-term, or probationary employee is reassigned from one (1) class to another class with the same recruiting rate, the employee's salary shall not change. Such employee shall have the same probation status that would have been achieved if the employee had been in the new class throughout the period of such service in the old class.

B. When a regular, limited-term, or probationary employee is reassigned from one (1) class to another class with the same salary range, but a higher recruiting rate, the employee's salary shall be advanced the percentage difference between recruiting rates. Such employee shall have the same probation status that would have been achieved if the employee had been in the new class throughout the period of such service in the old class.

C. When a regular or limited-term regular employee is reassigned from one (1) class to another class with the same salary range, but a lower recruiting rate, the employee's salary shall not change. Such employee shall have the same probation status that would have been achieved if the employee had been in the new class throughout the period of such service in the old class.

D. When a probationary or limited-term probationary employee is reassigned from one (1) class to another class with the same salary range, but a lower recruiting rate, the employee shall have the rate status and probation status that the employee would have achieved if the employee had been in the new class throughout the period of his/her service in the old class.

E. When a regular, limited-term, or probationary employee is involved in a series of reassignments among classes with different recruiting rates, the employee's salary shall be determined by the Human Resources Director.

F. When a regular, limited-term, or probationary employee is reassigned from a class in one (1) salary range to a class in another salary range, the employee shall be placed at the closest rate that does not involve a salary reduction, but not to exceed the maximum rate in the salary range. Such an employee shall have the same probation status that would have been achieved if the employee had been in the new class throughout the period of such service in the old class.

Section 6. Salary on Reduction

A. Disciplinary Reductions

When a regular, limited-term, or probationary employee is reduced for disciplinary reasons, the employee's salary shall be reduced as follows:

1. A five and five-tenths (5.5) percent reduction or the appropriate closest corresponding Control Point of the salary range assigned to the lower class, whichever is lower.

B. Non-disciplinary Reductions

1. Except as provided in Section 6.C.3. of this Article, when a regular or limited-term employee is reduced for physical disability or non-disciplinary reasons, the employee shall receive the highest salary in the lower salary range that does not exceed the employee's rate of pay immediately prior to reduction.

2. Except as provided in Section 6.C.3. of this Article, when a probationary or promotional probationary employee is reduced for physical disability or other non-disciplinary reasons, the employee shall have the salary status he/she would have achieved if the employee had remained in the lower class throughout the period of his/her service in the higher class.

C. When a regular, limited-term, or probationary employee is reduced as a result of a position reclassification, the applicable salary shall be determined as follows:

1. If the salary of the employee is the same or less than the maximum rate in the new salary range, the salary of the employee shall not change.

2. If the salary of the employee is greater than the maximum rate in the new salary range, the salary of the employee shall be designated as a Y-

~~Rate and shall not change during continuous regular service until the maximum rate of the new salary range exceeds the salary of the employee. The Y-Rate shall begin on the effective date of the reclassification of the position.~~

~~3. When an employee on a Y-Rate accepts a voluntary reduction, his/her salary shall be reduced by the amount of the difference between the maximum salary on the salary range of the class from which the employee is being reduced and the maximum salary on the salary range of the new class.~~

~~Section 7. Salary on Reclassification~~

~~A. The salary of a regular, limited-term, or probationary employee whose position is reclassified shall be determined as follows:~~

~~1. If the position is reclassified to a class with the same salary range, the salary of the employee and probationary status shall remain the same as in the former class.~~

~~2. If the position is reclassified to a class with a higher salary range, the salary of the employee shall be governed by Section 4. of this Article, or at the discretion of the Human Resources Director, the salary of the employee shall not be changed.~~

~~3. If the position is reclassified to a class with a lower salary range, the salary of the employee shall be governed by Section 6. of this Article.~~

~~Section 8. Salary on Reemployment~~

~~A. A person who is reemployed in the same occupational series in which the person held regular status and was separated in good standing may, upon approval of the Human Resources Director, be appointed at a rate higher than the recruiting rate, but no higher than the rate the person occupied at the time of separation, unless appointment is at an advanced rate pursuant to Section 2.B. of this Article.~~

~~B. A former employee of the Orange County Fire Department or of the Authority on paid County or Authority retirement may be reemployed for the maximum allowable time pursuant to Government Code provisions in any one (1) fiscal year in a position requiring special skills and knowledge and may be appointed to the position at any rate on the salary range.~~

~~Section 9. Change in Salary Allocation~~

~~A. If a class is reassigned to a higher salary range, the Board, or where appropriate, the Fire Chief, shall determine the amount of increase, if any, each employee in the class shall receive. Such increases shall not exceed fifteen (15) percent, provided that the employee's salary shall not fall below Control Point A of the new salary range, and in no case shall the employee's salary fall below his/her salary received before the reassignment of the class.~~

~~Section 10. Additional Compensation~~

~~A. Notwithstanding anything in this Personnel and Salary Resolution to the contrary, when in the judgment of the Board it becomes necessary or desirable to utilize the services of Authority employees in capacities other than those for which they are regularly employed, the Board may authorize and, if appropriate, fix an additional rate of compensation for such employees.~~

ARTICLE III

EMPLOYEE PROVISIONS

Section 1. Time Off for Selection Procedures

A. With the approval of the Fire Chief, a regular, limited-term, or probationary employee shall be entitled to necessary time off with pay to participate in tests of fitness, examinations, and interviews required by the Human Resources Director during working hours for the purpose of determining eligibility for movement to another class in the Authority service.

Section 2. Probation

A. New Probation

1. Full-Time Employee

A new or reemployed employee who has been out of Authority service for more than two (2) years, employed in a regular or limited-term position, shall be placed on new probation for fifty-two (52) weeks from the date of appointment ending with the first day of the pay period following completion of said period.

2. Part-Time Employee

A new or reemployed employee who has been out of Authority service for more than two (2) years, employed in a part-time (regular or limited-term) position, shall be placed on new probation for two thousand eighty (2080) paid hours ending with the first day of the pay period following completion of said period.

B. Promotional Probation

1. A full-time or part-time employee who is promoted, except on a temporary promotion, shall be placed on promotional probation, except as provided in Section 2.B.2. of this Article.

a) A full-time employee shall serve a probation period of fifty-two (52) weeks ending with the first day of the pay period following completion of said period.

b) A part-time employee shall serve a promotional probation period of two thousand eighty (2080) paid hours ending with the first day of the pay period following completion of said period.

2. When a regular or regular limited-term employee is promoted, reduced, or reassigned as a result of the employee's position being reclassified and the class from which the employee is promoted, reduced, or reassigned is subsequently deleted or abolished, the incumbent employee shall not serve a promotional probation period.

3. When an employee who has been on a temporary promotion or a regular employee who was promoted to a limited-term position at the direction of the Fire Chief is reduced to a class the employee formerly occupied, the employee shall serve the remainder of any uncompleted probationary period in that class.

4. Except as provided in Section 2.B.2. of this Article, when a regular, limited-term, or probationary employee employed in a class other than Administrative Management, Executive Management, or Fire Management is reassigned or reduced to an Administrative Management class, such employee shall be placed on promotional probation for a period equal to the new probation periods set forth in Sections 2.A.1. and 2.A.2. of this Article.

C. Failure of Probation

1. New Probation

a) An employee on new probation may be released from service at the sole discretion of the Authority at any time without right of appeal or hearing, except where an employee alleges his/her release was the result of discrimination by the Authority because of a protected status as defined by the existing Fair Employment and Housing Act or other applicable law. In the case of such allegations, the employee may submit an appeal at Step 2 of the disciplinary and predisciplinary procedure within fourteen (14) calendar days after receipt by the employee of notice of failure of new probation.

2. Promotional Probation

a) An employee on promotional probation may be failed at the sole discretion of the Authority at any time without right of appeal or hearing, except where an employee alleges his/her failure of promotional probation was the result of discrimination as described in Section 2.C.1.a) of this Article. In case of such allegations, the employee may submit an appeal at Step 2 of the disciplinary and predisciplinary procedure within fourteen (14) calendar days after receipt by the employee of notice of failure of promotional probation.

b) When an employee fails his/her promotional probation, the employee shall have the right to return to his/her former class, provided the employee was not in the previous class for the purpose of training for a promotion to a higher class.

c) When an employee is returned to his/her former class under the provisions of this Section, the employee shall serve the remainder of any uncompleted probationary period in the former class. A regular employee who accepts promotion to a limited-term position other than at the direction of the Fire Chief shall not have the right to return to his/her former class.

d) If the employee's former class has been deleted or abolished, the employee shall have the right to return to a class in his/her former occupational series closest to, but no higher than, the salary range of the class that the employee occupied immediately prior to promotion and shall serve the remainder of any probationary period not completed in the former class.

e) An employee who fails promotional probation shall receive a performance evaluation stating the reason for failure of promotional probation.

D. General Provisions

1. When an employee's record consists of a combination of full-time and part-time service in regular or regular limited-term positions, except as provided in Part 2, Article IV, Section 2.C., part-time service shall be applied proportionately by using total hours worked to appropriate full-time requirements. For purposes of this Section, two thousand eighty (2080) hours shall equal fifty-two (52) weeks.

2. When the Fire Chief or his/her representative passes an employee on probation, that determination shall be based upon a written performance evaluation and shall be discussed with the employee. A probation period may not be extended, except as provided in Section 2.E. of this Article and an employee who is permitted by the Authority to work beyond the end of a probation period shall be deemed to have passed such probation period.

E. Extension of Probation Periods

1. The granting of an Official or Military Leave of Absence, the imposition of a suspension, or the granting of a light duty assignment to an employee shall cause the employee's probation period to be extended by the length of the Official Leave, suspension, or light duty assignment, or by the length of the Military Leave in excess of fifteen (15) calendar days. The extended probation period resulting from the Official or Military Leave of Absence, suspension, or light duty assignment shall end with the first day of the pay period after said extended date.

2. The Human Resources Director shall extend the new or promotional probationary periods of incumbents appointed as a result of a selection procedure that is appealed. Such probationary periods shall be extended no longer than sixty (60) calendar days from the date on which the Authority receives the Appeals Officer's findings and decision. In the event an employee's probationary period is extended by the provisions of this Section, and such an employee has served a probationary period that is longer than the probationary period normally prescribed for new or promotional probation, such an employee may fail probation during the extended period only upon recommendation of the Appeals Officer and final determination of the Board of Directors.

3. Upon recommendation of the Assistant Chief/Department Head or his/her designee or request of the employee with the concurrence of the Assistant Chief/Department Head or his/her designee, the probation period of an employee may be extended at the sole discretion of the Human Resources Director for a period not to exceed one hundred eighty (180) calendar days, provided such action is approved by the Human Resources Director before the normal probation period is completed. Denial of a request to extend a probation period shall not be subject to appeal or hearing.

4. The Human Resources Director shall extend the probationary period of employees with an employment authorization document that has an expiration date that would occur after the end of the probation period. Such probation periods shall be extended to coincide with the expiration date of the employment authorization document. In the event an employee's probationary period is extended by the provisions of this Section, and such an employee serves a probationary period that is longer than the normal probation period, such an employee may fail probation during the extended period only for failure to obtain a new, valid employment authorization document by the expiration date of the expiring employment authorization document.

Section 3. Performance Evaluation

A. The Authority shall maintain a system of employee performance ratings designed to give a fair evaluation of the quantity and quality of work performed by an employee. Such ratings shall be prepared and recorded in the employee's personnel file for all regular and limited-term (full-time and part-time) employees at least once each year, and, in addition, for employees on probationary status, at least once near the middle of the probation period and prior to the end of the probation period.

B. The Authority shall discuss with the employee the specific ratings prior to such ratings being made part of the employee's personnel file.

C. When a performance evaluation is recorded in the personnel file of an employee, a copy of such evaluation, together with any attachment relating thereto, shall be given to the employee.

Section 4. Contents of Personnel File

A. Adverse statements prepared by the Authority shall not be included in an employee's official personnel file, unless a copy is provided to the employee.

B. An employee shall have the right to inspect and review the contents of his/her official personnel file at reasonable intervals.

C. In addition, an employee shall have the right to inspect and review the contents of his/her official personnel file in any case where the employee has a grievance related to performance, to a performance evaluation, or is contesting his/her suspension or discharge from Authority service.

~~D. Letters of reference and reports concerning criminal investigations concerning the employee shall be excluded from the provisions of Sections 4.B. and 4.C. of this Article.~~

~~E. An employee shall have the right to respond in writing or personal interview to any information contained in his/her official personnel file, such reply to become a permanent part of such employee's official personnel file.~~

~~F. Any contents of an employee's official personnel file may be destroyed pursuant to an agreement between the Human Resources Director and the employee concerned or by an order of an arbitrator, court, or impartial hearing officer, unless the particular item is otherwise required by law to be kept.~~

ARTICLE I~~V~~

EMPLOYMENT PROVISIONS

Section 1. Temporary Promotion

A. A regular, probationary, or limited-term employee who is assigned on a temporary basis to a higher level vacant (regular or limited-term) position shall be promoted on a temporary basis to that class, provided he/she meets the qualifications of the position, when such employee has been assigned to the higher class for one hundred twenty (120) consecutive regularly scheduled hours of work, and the employee has been performing all of the significant duties and responsibilities of the higher class, unless the employee requests to be reassigned to his/her former class. In such a case, the employee shall be reassigned within five (5) working days.

B. The Authority may, at its option, waive the one hundred twenty (120) hour requirement when it is necessary to utilize a regular, probationary, or limited-term employee in a higher level vacant (regular or limited-term) position for a period that is expected to be at least one hundred twenty (120) consecutive regularly scheduled hours, but less than one (1) year.

C. An employee on temporary promotion shall not be placed on promotional probation. Upon return from temporary promotion, an employee shall serve the remainder of any uncompleted probationary period in the employee's former class and shall have the salary status he/she would have achieved if the employee had remained in the lower class throughout the period of his/her service in the higher class.

D. At the end of the employee's assignment to the higher class, the employee shall have the right to return to his/her former class and department. A temporary promotion shall not exceed a period of one (1) year.

Section 2. Status of Limited-Term Employees

A. All limited-term employees shall be subject to the same hiring standards and shall earn all benefits, except those contained in the LAYOFF PROCEDURE, that accrue to employees in regular positions.

B. A regular employee who transfers, promotes, or reduces to a limited-term position on a voluntary basis and not at the direction of the Fire Chief shall become a limited-term regular employee.

C. Limited-term employees hired under programs that involve special employment standards shall serve a new probation period upon transfer to permanent funded positions. Upon transfer to permanent positions, such employees shall maintain their original hire date for purposes of vacation and sick leave accrual, retirement, and layoff. The requirement that such employees serve a new probation period may be waived with the approval of the Human Resources Director. Limited-term employees not hired under programs that involve special employment standards shall, upon transfer to permanent funded positions, maintain their original hire date for purposes of

vacation and sick leave accrual, retirement, layoff, and new employee probation.

D. When funding ceases for a limited-term position or when the position is no longer necessary, the limited-term position shall be abolished and the incumbent shall be removed from the payroll, except as provided in Section 2.E. of this Article.

E. Regular employees who transfer, promote, or reduce to limited-term positions at the direction of the Fire Chief shall retain their former status and retain their layoff benefits in their former layoff unit. The Fire Chief shall make such an order in writing prior to the date of transfer, promotion, or reduction.

Section 3. Reemployment of Employees on Disability Retirement

A. The Authority shall counsel and advise employees retired for physical disability about reemployment opportunities with the Authority.

B. Employees retired for physical disability who, within two (2) years from date of retirement, or date their disability retirement is discontinued, request and qualify for positions in the Authority service shall be placed on the eligibility list ~~AUTHORITY PREFERRED ELIGIBLE LIST~~ with respect to such positions. They shall be placed on such List in chronological order of retirement, but following the last person on layoff status. They shall remain on such List for a period of two (2) years from date of retirement, or date their disability retirement is discontinued, except that:

1. A person appointed to a regular position in the Authority service shall be removed from the List;

2. A person who, on two (2) separate occasions, rejects, or fails to respond within three (3) workdays to offers of employment in a class for which he/she is qualified, shall be removed from the List;

3. A person, who on three (3) separate occasions, declines referral for interviews in a class for which he/she is qualified, shall be removed from the List.

Section 4. Reemployment of Regular Employee

A. A regular employee who leaves Authority employment and is reemployed within fifteen (15) calendar days shall be deemed to have been on Authority Leave for such period of time.

~~ARTICLE V~~

~~LEAVE PROVISIONS~~

~~Section 1. Sick Leave~~

~~A. Accumulation of Sick Leave – shall be in accordance with the following schedule:~~

~~Regular, Limited-Term, and Probationary Employees~~

~~HOURS OF CONTINUOUS SERVICE EXCLUSIVE OF OVERTIME~~	~~HOURLY ACCRUAL RATE~~
~~1 though 6,240.00 regularly scheduled hours~~	~~0.0347 hours for each regularly scheduled work hour paid~~
~~6,240.01 or more regularly scheduled hours~~	~~0.0462 hours for each regularly scheduled work hour paid~~

~~For the purpose of this Section, each biweekly pay period for which a full-time employee receives his/her full biweekly salary shall be considered the equivalent of eighty (80) regularly scheduled paid hours. A part-time employee shall accumulate sick leave on a prorated basis not to exceed the equivalent for a full-time employee.~~

~~When determined to be in the best interest of the Authority, the Fire Chief may approve up to forty (40) hours of sick leave be advanced to a newly appointed employee. The additional accrual of hours of sick leave would be suspended until such time as the forty (40) hours would have been earned. At that time, sick leave accrual would resume at the rate specified in Section 1.A. of this Article.~~

~~Extra Help Employees~~

~~After thirty (30) calendar days of employment, extra help employees become eligible to earn three (3) days of paid sick leave annually. Extra help employees shall be eligible to apply sick leave to absences beginning on the ninetieth (90th) day of employment. Unused paid sick leave is not carried over from one year to the next. The annual paid sick leave allotment will be credited to the extra help employee's sick leave accumulation account annually on the employee's hire date. When an extra help employee separates employment and is rehired, his/her rehire date will be used to determine when he/she is credited his/her annual paid sick leave allotment.~~

B. Sick Leave Earned - shall be added to the employee's sick leave accumulation account upon the completion of the pay period with no credit to be applied during the progress of the pay period or for a portion of the pay period during which the employee terminates Authority service. Artice V Section 1B does not apply to extra help employees.

C. Permitted Uses of Sick Leave

Sick leave may be applied to:

1. An absence necessitated by employee's personal illness, injury, or disability due to pregnancy or childbirth.

2. Medical and dental office appointments when absence during working hours for this purpose is authorized by the employee's supervisor.

3. Absence due to exposure to a contagious disease when quarantine is imposed by health authorities or when it is determined by a physician designated by the Authority that the presence of the employee on duty would endanger the health of others.

4. Absence from duty because the employee's presence is needed to attend to the serious illness of a member of his/her immediate family, provided that such absence shall be limited to a maximum of three (3) working days for each occurrence. Extra help employees may also apply sick leave for themselves or an immediate family member for the preventative care or care of an existing health condition or for specified purposes if the employee is a victim of domestic violence, sexual assault, or stalking. Additionally, once each calendar year, an employee may utilize up to five tenths (.5) of the employee's annual sick leave accrual rate in any one (1) instance. For purposes of this Section, immediate family shall mean father, father-in-law, mother, mother-in-law, step-parent, brother, sister, wife, husband, registered domestic partner, child, grandparent, dependent adult or child for whom the employee is the legal guardian, or as otherwise defined by law. Grandchild is included in the definition of an immediate family member for the purposes of extra help employees' use of paid sick leave.

5. Illness while on paid vacation shall be charged to sick leave rather than vacation only under the following conditions:

a) The illness or injury of the employee is of a nature that would preclude the effective use of vacation and would prevent the employee from performing his/her normal duties.

b) The employee must notify his/her supervisor within four (4) calendar days of the beginning of the illness or prior to the end of his/her vacation, whichever is sooner, to request that his/her illness on vacation be charged to sick leave.

c) The Authority shall be under no obligation to extend the vacation beyond the original scheduled vacation ending date.

d) Upon the employee's return to work, the employee must furnish the Authority with a certificate signed by a licensed physician, registered nurse, or recognized health care provider stating the nature of the medical condition and the period of disablement.

6. Absence from duty because of personal business not to exceed twenty (20) working hours during the fiscal year. This Section does not apply to extra help employees.

7. An absence due to an air pollution alert that prevents the employee from traveling to his/her work location.

D. Prohibited Uses of Sick Leave

1. Sick leave shall not be applied to absences caused by illness or injury to a member of the employee's family, except as provided in Sections 1.C.4. and 1.C.6. of this Article.

2. Sick leave shall not be applied to absences that occur on an Authority observed holiday, except when an extra help employee was assigned to work the holiday and meets the permitted uses of sick leave requirements.

E. General Provisions

1. In any use of sick leave, an employee's account shall be charged to the nearest quarter hour.

2. A regular or limited term employee may be required to furnish a certificate issued by a licensed physician or registered nurse or other Authority-approved evidence of illness, injury, or medical condition, or medical or dental office calls when the department has notified the employee in advance of such a requirement or when the employee has been under the care of a physician.

3. A regular or limited term employee shall receive sick leave payoff as follows:

a) Upon paid retirement or death, an employee or the employee's estate shall be paid for a portion of the employee's unused sick leave in an amount computed as provided below:

Years of Service	**Percent of Unused Sick Leave Paid For**
Less than 5 years	None
5 but less than 10	25%
10 but less than 15	50%
15 but less than 20	75%
20 or more	100%

~~Years of service as used herein shall be the equivalent of full-time continuous service in a regular position. Employees who elect to take deferred retirement shall not be eligible for any benefits provided by this paragraph. Former County of Orange employees entitled to continuous service, shall be credited with their sick leave balances upon employment with the Authority.~~

~~b) Not more than once in each fiscal year, an employee who has accumulated unused sick leave in excess of two hundred eighty (280) hours shall, upon request, receive a payoff for up to one-third (1/3) of all his/her accumulated sick leave, provided that the remaining balance is not reduced below two hundred eighty (280) hours. The percentage of sick leave paid shall be computed based on years of continuous service in accordance with Section 1.E.3.a) of this Article. The employee's sick leave balance shall be reduced by the total number of hours elected and approved for payoff by the employee prior to the application of the eligible percentage described in Section 1.E.3.a) of this Article.~~

~~c) Notwithstanding the provisions of Section 1.E.3.b) of this Article, an employee who has given irrevocable written notice of his/her intent to retire at least thirty (30) calendar days prior to the effective date of his/her retirement, may request that a payoff of his/her accumulated sick leave be made to his/her deferred compensation account with the Authority to the maximum amount permitted under the regulations that govern deferred compensation programs and to the extent permitted under the provisions of Section 1.E.3.a) of this Article. Such payoff shall be made prior to the effective date of employee's retirement.~~

~~4. When a former employee of the County of Orange Fire Department or the Authority is reemployed in a regular or limited-term position, the Human Resources Director may apply the total period of previous County of Orange and Authority service for the purpose of determining sick leave earning rates.~~

~~5. When an extra help employee is rehired within one (1) year from separation, previously accrued and unused paid sick days shall be reinstated. The employee shall be entitled to use those previously accrued and unused paid sick days and to receive additional paid sick days upon rehiring.~~

~~Section 2. Bereavement Leave~~

~~A. Upon request, regular, limited-term, or probationary employees shall receive necessary time off with pay, not to exceed three (3) days in any one (1) instance, to arrange for or attend a funeral of a member of their immediate family. For purposes of this Section, immediate family shall mean father, father-in-law, mother, mother-in-law, step-parent, brother, sister, wife, husband, child, grandparent, grandchild or dependent child or adult for whom the employee is the legal guardian.~~

~~Section 3. Authorized Leave Without Pay~~

~~A. Authority Leave~~

~~1. Upon request, a regular, limited-term, or probationary employee may be granted an Authority Leave Without Pay for a period of time not to exceed fifteen (15) calendar days. The granting of such Leave shall be at the discretion of the Fire Chief, except in cases where Official Leave has been authorized pursuant to Sections 3.B. and 9.A. of this Article. The Fire Chief may require that all accumulated compensatory time be used prior to granting of such Leave. The use of earned vacation prior to the obtaining of Leave shall be at the option of the employee. If the Leave qualifies as Family Leave pursuant to applicable law, the Fire Chief may require that all sick leave and compensatory and vacation time be used prior to granting an Authority Leave, except that the use of sick leave shall be subject to the provisions of Sections 1.C. and 1.D. of this Article.~~

~~B. Official Leave~~

~~1. Upon request, a regular, limited-term, or probationary employee may be granted an Official Leave of Absence Without Pay. Such Leave, if granted, shall not exceed one (1) year, except as provided in Sections 3.B.2. and 3.B.3. of this Article. Such Leave may be taken only after an employee's completion of an Authority Leave request, provided that the granting of a Leave shall not be a prerequisite to a request for Official Leave. The Fire Chief may require that all or a portion of compensatory time and vacation be used prior to granting such Leave.~~

~~2. An Official Leave of Absence may be extended for up to an additional year at the discretion of the Fire Chief, except that requests for Official Leave that qualify as Family Leave pursuant to applicable law shall be granted to the extent required by such law. If the Fire Chief denies the extension of such Leave, Sections 3.B.5. and 3.B.6. of this Article shall not apply.~~

~~3. Upon request, an employee who has requested and identified a valid need for Family Leave pursuant to Section 11. of this Article and applicable law, shall be granted Official Leave to the extent required by such law. Such Leave shall be authorized only after an employee's completion of an Authority Leave request and after all accumulated compensatory time and vacation accruals have been applied toward payment of the absence. In addition, where appropriate under the provisions of Section 1.C. of this Article, the employee may be required to apply all sick leave accruals toward payment of the absence before an Official Leave shall be authorized.~~

~~4. An employee shall give notice two (2) weeks prior to the date he/she wants to return to work, except that an employee returning from Family Leave shall give the lesser of two (2) weeks notice or the maximum notice allowable under applicable law. If an employee does not give the required notice prior to the date he/she wants to return to work, the~~

~~Authority shall not be required to return the employee to work until the employee gives such notice; however, the Authority may waive the notice or reduce the notice period at its discretion.~~

~~5. The Department Head/Assistant Chief shall indicate on the request for Leave of Absence his/her recommendations as to whether the request should be granted, modified, or denied and shall promptly transmit the request to the Human Resources Director. The Human Resources Director shall render a decision within thirty (30) days of when the request is submitted to him/her. If the Human Resources Director approves the request, he/she shall deliver a copy to the Finance Manager, the Department Head/Assistant Chief, and the employee.~~

~~6. If the Human Resources Director modifies or does not approve a request for Official leave, the employee and/or the Department Head/Assistant Chief may, within fifteen (15) calendar days of said action, file a request with the Human Resources Director for review by the Fire Chief. Upon such request, the Human Resources Director shall forward a copy of the request for Official Leave to the Fire Chief for final determination. The employee and the Department Head/Assistant Chief shall notify the Human Resources Director whether he/she shall submit his/her position in a written statement or wishes to appear before the Fire Chief. The Human Resources Director may present his/her position in the same manner as the employee presents his/her position. The decision on such appeals shall be final.~~

~~7. An Official Leave shall not be deemed a break in Authority service.~~

~~C. General Provisions~~

~~1. A request for a Leave of Absence shall be made upon forms prescribed by the Human Resources Director and shall state specifically the reason for the request, the date when it is desired to begin the Leave of Absence, and the probable date of return.~~

~~2. A request for Leave of Absence Without Pay shall normally be initiated by the employee, but may be initiated by the employee's supervisor or Department Head/Assistant Chief only where the employee is unable to initiate such action, except in cases where the provisions of Section 9.A. of this Article apply.~~

~~3. An employee who has been absent without pay due to a Leave granted pursuant to Sections 3., 4., 10., and/or 11. of this Article shall be considered to have automatically resigned his/her employment with the Authority under the provisions of Section 8. of this Article, unless he/she returns to work at the end of the Leave or receives approval for an extension of his/her Leave.~~

~~Section 4. Official Leave for Non-occupational Disability~~

~~A. A regular, limited-term, or probationary employee shall be granted upon request an Official Leave of Absence Without Pay for up to six (6) months for a non-occupational disability, including disabilities related to pregnancy and childbirth, provided the employee meets the following conditions:~~

~~1. A medical statement covering diagnosis, prognosis, expected date of return, and period of disability shall be submitted with the Leave request.~~

~~2. Such Leave shall begin after all accrued sick leave and compensatory and vacation time have been applied toward the absence.~~

~~3. Unless otherwise required by law, the employee has been paid for six thousand two hundred forty (6240) regularly scheduled hours or more.~~

~~B. If additional Leave is desired, the employee may request additional Leave in accordance with Official Leave, Section 3.B. of this Article.~~

~~C. An employee shall not be entitled to more than one (1) such Leave per twelve (12) month period.~~

~~Section 5. Absences Caused by Medical Conditions~~

~~A. An employee who is absent from work for a period of more than fourteen (14) consecutive calendar days due to a medical condition shall not be permitted to resume work until and unless the employee obtains a medical clearance from a physician designated by the Authority.~~

~~Section 6. Jury Duty Leave~~

~~A. A regular, limited-term, or probationary employee who is called for jury duty or for examination for jury duty shall be compensated at the employee's regular rate of pay for those hours of absence due to the jury duty that occurs during the employee's regularly scheduled working hours, provided the employee deposits the employee's fees for such hours of jury duty, exclusive of mileage, with the Finance Manager. Fees for jury duty performed during hours other than regularly scheduled working hours may be retained by the employee. An employee may request a change in regularly scheduled working hours to a Monday through Friday work schedule for the duration of such jury duty. Such requests shall be granted, if practicable.~~

~~Section 7. Witness Leave~~

~~A. A regular, limited-term, or probationary employee who is called to answer a subpoena as a witness for court appearances during the employee's work hours, except where the employee is a litigant or where the subpoena is related to the employee's employment with another employer, shall be compensated at his/her regular rate of pay for all hours of absence from work due to answering the subpoena, provided the employee shows proof of such subpoena and deposits witness fees received for such hours, exclusive of~~

~~mileage, with the Finance Manager. Fees for answering a subpoena as a witness during hours other than regularly scheduled working hours may be retained by the employee.~~

~~Section 8. Absence Without Authorization~~

~~A. Absence without authorization, whether voluntary or involuntary, for three (3) consecutive working days shall be considered an automatic resignation from Authority employment as of the last date on which the employee worked or the last date the employee was to return to work from an authorized absence.~~

~~B. If an employee does not have prior authorization to be absent from work, such employee may request specific authorization from the Fire Chief prior to the expiration of the time limit specified in Section 8.A. of this Article.~~

~~C. When an employee has been absent without authorization and the Authority plans to invoke the provisions of Section 8.A. of this Article at least ten (10) calendar days prior to accepting and entering an automatic resignation, the Authority shall send written notice to the employee's last known address by certified mail with return receipt requested and shall deposit such notice in the United States mail with postage fully prepaid. Notice is complete upon mailing. Such written notice shall contain:~~

~~1. A statement of the Authority's intention to accept and enter the employee's automatic resignation and its effective date;~~

~~2. A statement of the reasons for considering the employee to have automatically resigned;~~

~~3. A statement of the employee's right to respond, either orally or in writing, prior to the effective date of such proposed action;~~

~~4. A statement of the employee's right to representation;~~

~~5. A copy of the automatic resignation provisions that apply to the employee; and~~

~~6. A statement that if the employee fails to respond to the written notice before the effective date of the automatic resignation, the employee has waived any right to appeal the automatic resignation.~~

~~D. An automatic resignation shall not be accepted and entered if the employee: 1) responds to the notice before the effective date, 2) provides an explanation satisfactory to the Authority as to the cause of the unauthorized absence and the reasons for failing to obtain an authorized Leave and submits any pertinent documentation to substantiate such reasons, and 3) is found by the Authority to be ready, able, and willing to resume the full duties of his/her position.~~

~~E. An employee who is permitted to continue his/her employment pursuant to Sections 8.C. and/or 8.D. of this Article shall not be paid for the period of his/her unauthorized absence and shall be treated as if on a Leave of Absence for purposes of continuity of employment and other appropriate benefits,~~

~~unless the Authority determines it is appropriate to use sick leave, compensatory time, vacation, or other paid Leave to cover the absence.~~

~~F. Notwithstanding any other provision of this Section, the Authority may rescind an automatic resignation.~~

~~G. Automatic resignations shall not be considered a discharge under the provisions of Part 2, Article VIII, DISCIPLINARY AND PREDISCIPLINARY ACTIONS.~~

~~Section 9. Workers' Compensation Leave~~

~~When an injury is determined to be job-related in accordance with Part 2, Article XI, ON-THE-JOB INJURIES, WORKERS' COMPENSATION, a regular, limited-term, or probationary employee shall be placed on Workers' Compensation Leave. If such determination cannot readily be made and all sick leave has been applied to the absence, the employee shall be placed on Official Leave until a final determination is made.~~

~~A. Workers' Compensation Leave shall continue until the employee:~~

~~1. Is determined to be physically able to return to work by an Authority-designated physician; or~~

~~2. Is determined to be physically able to return to work with medical restrictions that the Authority can accept; or~~

~~3. Accepts employment outside the Authority; or~~

~~4. Accepts employment in another Authority position; or~~

~~5. Has retired pursuant to appropriate Government Code provisions.~~

~~An employee who does not return to work within two (2) weeks of the end of his/her Workers' Compensation Leave pursuant to this provision shall be considered to have automatically resigned his/her employment with the Authority under the provisions of Section 8. of this Article.~~

~~B. An employee on Workers' Compensation Leave and/or 4850 leave must give notice two (2) weeks prior to the date he/she wants to return to work. If an employee does not give two (2) weeks notice prior to the date he/she wants to return to work, the Authority shall not be required to return the employee to work until such notice is given; however, the Authority may waive the notice or reduce the notice period at its discretion.~~

~~Section 10. Parenthood Leave~~

~~A. A regular, limited-term, or probationary employee shall be granted, upon request, a Parenthood Leave Without Pay of up to six (6) months in connection with the birth or placement for legal adoption of a child, provided the employee meets the following conditions:~~

1. The requested Leave is commenced within six (6) months before or after the date of birth or placement for legal adoption of the child.

2. Sufficient documentation of such birth or placement for legal adoption of a child is submitted with the request for Leave.

3. Such employee has completed new probation.

4. All accrued vacation and compensatory time have been applied toward the absence.

B. Unless otherwise required by law, employees shall not be eligible for more than one (1) such Leave within any twelve (12) month period.

C. Sick leave must be applied toward any portion of the absence that qualifies under Section 1.C. of this Article, provided the employee has furnished the Authority with a certificate signed by a licensed physician stating the nature of the medical condition and period of disability.

D. Pregnant employees may also apply for a Non-occupational Disability Leave for the term of disability as provided in Section 4. of this Article.

E. Parenthood Leave shall not be credited toward continuous service.

F. For employees on Parenthood Leave, probation periods shall be treated as if the employee were on Official Leave.

Section 11. Family Leave

A. General Provisions

1. Family Leave shall be granted to the extent required by law for the following situations:

a) An employee's serious health condition as provided by Section 4. of this Article.

b) The birth of a child or placement of a child for adoption or foster care as provided in Section 10. of this Article.

c) Employee's presence is needed to attend to a serious health condition of the employee's child, spouse, parent, or child of an employee standing in "loco parentis" who is either under eighteen (18) years old or adult dependent child incapable of self-care because of mental or physical disability.

2. Employees must request and identify their need for Family Leave. When an employee requests Family Leave, the employee shall have the choice of utilizing his/her accrued Leave balances, for the purpose of continuing salary and benefits while on Family Leave, or the employee may choose

~~to take Leave Without Pay. Requests for Family Leave may also fall under the provisions of Sections 3., 4., and 10. of this Article.~~

~~3. The Authority shall determine if a request for Family Leave is valid within the parameters of applicable law.~~

~~4. When a request for Family Leave is approved, and the employee has elected to utilize accrued Leave hours, the employee shall determine in what order the employee wishes to apply such time. The use of sick leave shall be restricted to those circumstances that qualify under the provisions of Section 1.C. of this Article.~~

~~B. Notification Requirements~~

~~1. If the Family Leave is foreseeable, the employee must provide the Authority with thirty (30) calendar days notice of his/her intent to take Family Leave.~~

~~2. If the event necessitating the Family Leave becomes known to the employee less than thirty (30) calendar days prior to the employee's need for Family Leave, the employee must provide as much notice as possible. In no case shall the employee provide notice later than five (5) calendar days after he/she learns of the need for Family Leave.~~

~~3. When the Family Leave is for the purpose of the scheduled medical treatment or planned medical care of a child, parent, or spouse, the employee shall, to the extent practicable, schedule treatment and/or care in a way that minimizes disruption to Authority operations.~~

~~C. Verification~~

~~1. The Authority may require certification from the health care provider that states: (1) the date on which the condition commenced; (2) the probable duration of the condition; (3) an estimate of time that the employee needs to be off; and (4) that the employee cannot perform his/her duties because of the condition (if leave is for own serious health condition) or that care is needed (if leave is for child, spouse, or parent).~~

~~2. The Authority may require a medical statement covering diagnosis, prognosis, and expected date of return.~~

~~3. Failure to provide satisfactory verification of the necessity for Family Leave is grounds for denial of the Family Leave.~~

~~Section 12. Catastrophic Leave~~

~~A. Eligibility for Donations - To receive Catastrophic Leave Donations, an employee or his/her immediate family member (immediate family member is defined as father, father-in-law, mother, mother-in-law, step-parent, brother, sister, wife, husband, child, step-child, grandparent, or legal guardian) must:~~

1. ~~Have a catastrophic medical condition that shall require the employee to be on unpaid Leave.~~

2. ~~Exhaust all allowable accrued sick leave, vacation, and compensatory time.~~

3. ~~Submit to the employee's Department Head/Assistant Chief (or his/her designee) a written request for donations accompanied by a medical statement from the employee's or family member's attending physician. The attending physician's statement must verify the employee's need for an extended Medical Leave or the need for the employee to take Leave to care for a member of his/her immediate family, and must include a brief statement of the nature of the illness or injury and an estimated time the employee shall be unable to work.~~

B. ~~Request for Additional Donations~~

1. ~~Employees who receive donations under this procedure and who exhaust all donated sick leave may request an additional donation period(s) subject to the provisions of Section 12.A.2. of this Article.~~

C. ~~Donation Procedure~~

1. ~~Upon receipt of a valid request for donations from an eligible employee, the Department Head/Assistant Chief (or his/her designee) shall post a notice of the eligible employee's need for donations on the Authority e-mail system, bulletin boards, or other means of notification accessible to employees; confidential medical information shall not be included in the posted notice.~~

2. ~~Employees shall be provided a two (2) week period to submit their donations; donations received after the submission period shall not be processed.~~

3. ~~All donations shall be voluntary.~~

4. ~~Employees may donate vacation or compensatory time to the eligible employee; sick leave may not be donated.~~

5. ~~Donations must be a minimum of two (2) hours, but cannot exceed eight (8) hours; all donations must be made in whole hour increments.~~

6. ~~All donations shall be irrevocable.~~

7. ~~Employees wishing to donate time to the eligible employee must provide the following:~~

   a) ~~The donating employee's name, social security number, and department name.~~

   b) ~~The number of hours of vacation/compensatory time he/she wishes to donate within the limitations of Section 12.C.5. of this Article.~~

c) The name, department, and class title of the eligible employee to whom the time is being donated.

d) A statement from the donating employee indicating that he/she understands the donation of time is irrevocable.

e) The donating employee's signature authorizing the transfer of the donated time to the eligible employee.

f) Donation authorizations that do not contain all of the above information shall not be processed.

8. At the close of the donation period, the Financial Services Section shall verify the hourly rate of the donating employee and confirm that each donating employee has accrued time balances sufficient to cover the designated donation.

9. The Financial Services Section shall process all donations at one (1) time; no additional donations shall be processed.

10. The Authority shall convert the donated time to dollars at the hourly rate of the donor. The dollars shall then be converted to accrued vacation and sick leave, as described herein, at the hourly rate of the recipient of the donation. Donated converted hours shall first be added to the recipient's accrued vacation, to the maximum permitted under Section 13.C. of this Article. The balance of the donated converted hours shall then be added to the recipient's sick leave account. These donated vacation and sick leave hours shall be available for use during the recipient's Catastrophic Leave. If any donated hours remain at the end of the recipient's Catastrophic Leave, they shall remain available for the sole use of the recipient. If the recipient dies during the Catastrophic Leave, all unused donated time shall be converted to dollars at the hourly rate of the recipient and paid to the recipient's surviving spouse or estate in the same manner as any monies due for vacation and/or compensatory time.

11. An employee who is on a Leave Without Pay at the time he/she receives a Catastrophic Leave donation shall be treated as if on an Official Leave of Absence for purposes of probation.

Section 13. Vacation

A. Accumulation of Vacation

1. Accumulation of vacation shall be in accordance with the following schedule:

~~**Regular, Limited-Term, and Probationary Employees**~~

~~YEARS OF COMPLETED CONTINUOUS SERVICE~~	~~EQUIVALENT HOURS OF COMPLETED CONTINUOUS SERVICE~~	~~HOURLY ACCRUAL RATE~~
~~0 to 3 years~~	~~1 through 6,240.00 regularly scheduled hours~~	~~0.0577 hours for each regularly scheduled hour paid~~
~~After 3 years but less than 10 years~~	~~6,240.01 through 20,800.00 regularly scheduled hours~~	~~0.077 hours for each regularly scheduled hour paid~~
~~After 10 years~~	~~20,800.01 or more regularly scheduled hours~~	~~0.0962 hours for each regularly scheduled hour paid~~

~~2. For the purpose of this Section, each biweekly pay period for which a full-time employee receives his/her full biweekly salary shall be considered the equivalent of eighty (80) regularly scheduled paid hours.~~

~~3. When it is determined to be in the best interest of the Authority, the Fire Chief may approve vacation accruals up to a maximum of .077 hours vacation (approximately one hundred sixty [160] hours per year) for each hour of pay during the scheduled workweek for new employees. If approved, this accrual rate shall remain in effect until the employee is eligible for an increase as defined in Section 13.A.1. of this Article.~~

~~4. A new employee in a part-time (regular or limited-term) position shall earn prorated vacation in fifty-two (52) week segments. At the conclusion of fifty-two (52) weeks of employment, the ratio of regularly scheduled hours paid to two thousand eighty (2080) hours shall be determined. The same ratio shall be applied to eighty (80) hours to establish the amount of vacation to be credited to the employee's account as of the conclusion of the pay period in which the fifty-two (52) week period ended. The employee shall, in addition, earn .0193 hours of vacation for each hour of pay during his/her regularly scheduled workweek. Such additional credit shall be applied to the vacation accumulation account only upon completion of each pay period, with no credit to be applied during the progress of any pay period or for any portion of a pay period during which the employee terminates Authority service.~~

~~B. Vacation Credit~~

~~1. Vacation credit shall be applied to the employee's vacation accumulation account only upon completion of each pay period. No credit shall be applied during the progress of any pay period or for any portion of a pay period during which the employee terminates Authority service.~~

~~C. Maximum Allowable Vacation Credit~~

~~1. The maximum allowable vacation credit at any one (1) time for a full-time employee with less than ten (10) years of full-time continuous service shall be three hundred twenty (320) hours or a prorated amount equal to eight (8) weeks of vacation for part-time employees. The maximum allowable vacation credit at any one (1) time for a full-time employee with ten (10) or more years of full-time continuous service shall be four hundred (400) hours or a prorated amount equal to ten (10) weeks of vacation for part-time employees. All vacation hours earned in excess of the maximum allowable vacation credit shall be paid in the pay period earned.~~

~~D. General Provisions~~

~~1. Not more than eighty (80) hours of paid time may be credited toward accumulation of vacation credit in any pay period.~~

~~2. An Official Leave of Absence shall cause the aforementioned ten (10) years of full-time Authority service to be postponed a number of calendar days equal to the Official Leave.~~

~~3. Additional vacation earned during the period of vacation may be taken consecutively with the approval of the Fire Chief.~~

~~4. In any use of vacation, an employee's account shall be charged to the nearest quarter hour.~~

~~5. Vacations shall be scheduled for employees by the Authority; however, consideration shall be given to effectuating the wishes of those employees requesting specific vacation periods.~~

~~6. Illness while on paid vacation shall be charged to sick leave rather than vacation only under the conditions specified in Section 1.C.5. of this Article.~~

~~7. No employee shall be required to return to work for the Authority in any capacity during the time of his/her paid vacation from the Authority service, except in cases of emergency.~~

~~8. An employee separating from Authority service for reasons other than paid Authority retirement shall be paid for all accrued vacation in a lump sum payment. An employee who is separating from Authority service by way of paid Authority retirement may elect either to take time off for his/her vacation or to be paid for his/her vacation in a lump sum payment.~~

~~9. During each fiscal year, an employee may request to be paid for accrued vacation in either two (2) separate increments of up to forty (40) hours each or one (1) increment of up to eighty (80) hours. An employee who is within fifteen (15) hours of the applicable maximum allowable vacation~~

~~credit set forth in Section 13.C. of this Article may request to be paid for one (1) additional increment of up to eighty (80) hours in each fiscal year.~~

~~10. No scheduled vacation shall be canceled, except in cases of emergency.~~

~~11. When an employee's Authority service consists of part-time regular service or a combination of full-time regular and part-time regular service, both periods of service shall apply towards the required ten (10) years of Authority service, with the part-time service being applied proportionately to the appropriate full-time interval.~~

~~12. No employee shall be permitted to work for compensation for the Authority in any capacity during the time of his/her paid vacation from the Authority service. Employees are permitted to receive reimbursements for voluntary service as a Volunteer Reserve Firefighter while on paid vacation from Authority service.~~

~~E. Vacation Time for Transitioning Employees~~

~~When a former employee of the County of Orange Fire Department or the Authority is reemployed in a regular or limited-term position, the Human Resources Director may apply the total period of previous continuous County of Orange and Authority service for the purpose of determining vacation earning rates.~~

~~Section 14. Paid Annual Leave For Employees in OCFAMA~~

~~A. Effective July 10, 2015, employees in the OCFAMA will be eligible to use forty (40) hours paid annual leave as follows:~~

~~1. Upon completion of new hire probation with the Authority, an employee in the OCFAMA will be eligible to take up to forty (40) hours of paid annual leave time off each calendar year in addition to his/her other accrued time.~~

~~2. On January 1 of each subsequent year following July 10, 2015 or the employee's completion of probation with the Authority, eligible employees will receive forty (40) hours of PAL time.~~

~~3. This Paid Annual time may not be accrued and must be used within the calendar year earned, which shall be no later than December 31 of that year. If any of the 40 hours of paid annual leave are not used by the employee, it will result in the employee's paid annual leave bank being increased for the following year so that he/she has exactly 40 hours to use within that calendar year. At no time can the employee have more than 40 hours in his paid annual leave bank.~~

~~4. As permitted by Labor Code section 227.3, paid annual leave may not be cashed-out at any time, including at the end of employment.~~

5. ~~Approval to use paid annual leave is subject to operational need and the requests should be made in advance. If a specific date is denied, the approving manager will attempt to schedule a mutually agreeable alternate date. Such alternate dates must be scheduled within the year the paid annual leave is earned.~~

~~ARTICLE VI~~

~~HOLIDAYS~~

~~Section 1. Holidays Observed~~

~~A. Employees shall observe the following holidays:~~

- ~~New Year's Day~~
- ~~Martin Luther King, Jr.'s Birthday~~
- ~~Lincoln's Birthday~~
- ~~President's Day~~
- ~~Memorial Day~~
- ~~Independence Day~~
- ~~Labor Day~~
- ~~Columbus Day~~
- ~~Veteran's Day~~
- ~~Thanksgiving Day~~
- ~~Day after Thanksgiving~~
- ~~Christmas Eve~~
- ~~Christmas Day~~

~~Section 2. Regular, Limited-Term, and Probationary Employees~~

~~A. Holiday Compensation~~

~~1. For each holiday listed in Section 1.A. of this Article, each full-time employee scheduled to work, but permitted to take the day off, shall be paid for the number of hours the employee is regularly scheduled to work that workday computed at the employee's base hourly rate. A part-time employee scheduled to work, but permitted to take the day off shall receive pay computed at the employee's base hourly rate for the number of hours the employee was regularly scheduled to work to a maximum of nine (9) hours of holiday pay.~~

~~2. When a holiday listed in Section 1.A. of this Article, falls on a full-time employee's regularly scheduled day off, the employee shall receive eight (8) hours of compensatory time. A part-time employee shall receive compensatory time at the rate of one (1) hour for each five (5) hours of regularly scheduled work in the workweek to a maximum of eight (8) hours of compensatory time.~~

~~3. When a holiday falls on a Sunday, the next day (Monday) shall be observed as the holiday.~~

~~4. When Christmas Eve, Christmas Day or New Year's Day falls on a Saturday, the Friday immediately preceding each day shall be observed as the holiday.~~

5. Employees shall be paid in the pay period that the holiday occurs.

6. Full-time employees who are on a pay status during the pay period that includes March 1st each fiscal year shall be credited with two (2) hours of compensatory time at the end of the pay period that includes that date. Part-time employees whose regularly assigned work schedule is at least twenty (20) hours per week shall, in like manner, earn and be credited with one (1) hour of compensatory time.

B. Eligibility for Holiday Pay

1. An employee must be paid for all or a portion of both the regularly scheduled working assignment immediately prior to a holiday and the regularly scheduled working assignment immediately after that holiday in order to receive holiday pay.

2. A new employee whose first working day is the day after a holiday shall not be paid for that holiday.

3. An employee who elects paid Authority retirement on a holiday shall be paid for the holiday.

4. An employee who is terminating employment for reasons other than paid Authority retirement and whose last day as a paid employee is the day before a holiday shall not be paid for that holiday.

5. Only regular, limited-term, and probationary employees shall be eligible for holiday pay.

6. With Authority approval, compensatory time earned for working on a holiday or for a holiday falling on a regularly scheduled day off may be taken on the first scheduled working day after the holiday.

C. Compensation for Work on Holidays

1. An employee who is required to work on a holiday and who meets the eligibility requirements contained herein shall, in addition to his/her regular pay, receive compensatory time for each hour worked on a holiday at a rate of one and five-tenths (1.5) times the employee's base hourly rate.

D. Holidays that fall during an employee's vacation period shall not be charged against the employee's vacation balance.

E.A. Compensatory time earned under the provisions of this Article may be granted as compensatory time off or paid for at the discretion of the Authority. Employees shall be paid for all compensatory time in excess of eighty (80) hours.

~~ARTICLE VII~~

~~REIMBURSEMENT PROGRAMS~~

~~Section 1. Mileage Reimbursement~~

~~A. Subject to the current vehicle rules and regulations established by the Board, an employee who is authorized by the Fire Chief to use a private automobile in the performance of his/her duties shall be paid for each mile driven in the performance of his/her duties during each monthly period as provided below:~~

~~1. The reimbursement rate shall be the Internal Revenue Service Standard Mileage Rate for the Business Use of a Car.~~

~~B. An employee who is required by the Authority to furnish a privately owned vehicle for the performance of his/her duties on Authority time shall receive a minimum of ten (10) dollars in any month in which the actual mileage reimbursement would otherwise be less than ten (10) dollars. The minimum shall not apply in any month:~~

~~1. In which the employee has not actually worked eighty (80) hours;~~

~~2. Unless the employee claims the ten (10) dollar minimum and the Authority certifies that the employee was required to use a privately owned vehicle on Authority business.~~

~~Section 2. Personal Property Reimbursement~~

~~A. Employees shall, in proper cases, be reimbursed for the repair or replacement of personal property damaged in the line of duty without fault of the employee. The amount of reimbursement for articles of clothing shall be the depreciated value based on the age and condition of the article. The amount of reimbursement for other personal property covered by this provision shall be the actual replacement or repair value, whichever is lower, except that the reimbursement on a watch shall not exceed its functional value and the limit on eyeglasses shall be the cost of lenses, plus the cost of basic frames.~~

~~Section 3. Tuition Reimbursement~~

~~A. The tuition reimbursement program in this unit is designed to:~~

~~1. Enhance professional job skills; and~~

~~2. Encourage ongoing professional development.~~

~~B. Eligibility of courses shall be generally based on the provisions of Part 1, Article III, Section 2. Approval for other courses such as certificate programs, seminars, and workshops shall be subject to the approval of the requesting employee's Executive Manager.~~

~~C. For approved college or other approved graded courses, reimbursement shall require a minimum final grade of "C" or better for undergraduate courses and a minimum final grade of "B" or better for graduate courses. For courses that are not graded, reimbursement shall require proof of successful completion. No reimbursement shall be made for audited or incomplete courses.~~

~~D. Reimbursement from the Authority shall not exceed two thousand (2000) dollars in any fiscal year and shall apply to tuition, registration, lab fees, books, and approved related expenses; and shall be processed according to the Authority's tuition reimbursement process.~~

~~E. Reimbursement received from other sources for expenses covered in this Section shall be deducted before the Authority provides tuition reimbursement.~~

~~ARTICLE VIII~~

~~DISCIPLINARY AND PREDISCIPLINARY ACTIONS~~

~~Section 1. Reprimand or Denial of Performance Salary Increase~~

~~A. No regular, limited-term regular, or promotional probationary employee shall receive a written reprimand or denial of performance salary increase, except for reasonable cause.~~

~~B. A written reprimand or denial of performance salary increase may be appealed through this appeal procedure. Such appeal shall be initiated at Step 1 of this procedure.~~

~~Section 2. Disciplinary Hearing for Suspension, Reduction, or Discharge~~

~~A. In suspending a regular, limited-term regular, or promotional probationary employee for more than forty (40) regularly scheduled hours, or in reducing a regular or limited-term regular employee for reasons of unsatisfactory performance or physical disability, or in discharging a regular or limited-term regular employee, a written notice of such proposed disciplinary action shall be served on the employee personally, or by certified mail, at least fourteen (14) calendar days prior to the effective date of the proposed action. Such written notice shall contain:~~

~~1. A description of the proposed action and its effective date(s);~~

~~2. A statement of the reasons for such proposed action, including the acts or omissions on which the proposed action is based;~~

~~3. Copies of material on which the proposed action is based;~~

~~4. A statement of the employee's right to respond, either orally or in writing, prior to the effective date of such proposed action;~~

~~5. A statement of the employee's right to representation; and~~

~~6. A statement of the employee's right to appeal should such proposed action become final.~~

~~B. In suspending a regular, limited-term regular, or promotional probationary employee for forty (40) regularly scheduled hours or less, the above notice requirements shall be complied with, if practicable, prior to the effective date of the suspension, and in any event, not more than fourteen (14) calendar days after the effective date of the suspension.~~

~~C. Prior to the effective date of such suspension of more than forty (40) regularly scheduled hours, or reduction or discharge, an employee shall be given an opportunity to respond, either orally or in writing, at the employee's option, to a~~

~~designated Authority representative with the authority to make an effective recommendation on the proposed disciplinary action.~~

~~D. An employee shall be given reasonable time off without loss of pay to attend a disciplinary hearing.~~

~~E. An employee may represent himself/herself or may be represented by his/her representative in the disciplinary process.~~

~~F. An employee and his/her representative shall receive written notice sustaining, modifying, or canceling a proposed discharge on or prior to the effective date of such action.~~

~~G. An employee and his/her representative shall receive written notice sustaining, modifying, or canceling a proposed suspension or reduction prior to the effective date of such action.~~

~~H. Should a proposed reduction or suspension become final, an employee shall have the right to appeal such action pursuant to Section 3. of this Article.~~

~~Section 3. Right of Appeal~~

~~A. Suspension~~

~~1. No regular, limited-term regular, or promotional probationary employee shall be suspended, except for reasonable cause.~~

~~2. A written notice of such suspension stating specifically the cause of the suspension shall be given to the employee.~~

~~3. An appeal of suspension shall be initiated in accordance with Section 5. of this Article.~~

~~B. Reduction~~

~~1. No regular employee or limited-term regular employee shall be reduced to a position in a lower class for reasons of unsatisfactory performance or physical disability, except for reasonable cause.~~

~~2. A written notice of such reduction stating specifically the cause of the reduction shall be given to the employee.~~

~~3. An appeal of reduction to a position in a lower class shall be initiated in accordance with Section 5. of this Article.~~

~~C. Discharge~~

~~1. No regular or limited-term regular employee shall be discharged, except for reasonable cause.~~

~~2. A written notice of such discharge stating specifically the cause of the discharge shall be given to the employee.~~

3. An appeal of discharge shall be initiated in accordance with Section 5. of this Article.

D. Failure of the employee to comply with the time limits set forth in this Article shall signify that the employee has waived his/her right to further process the appeal, and the disciplinary action shall stand as intended/administered. Failure by the Authority representative to timely respond under this Article shall permit the employee to progress the appeal to the next step.

E. The time limits for appeals, set forth in this Article, may be extended by mutual agreement between the Authority representative and employee or his/her representative.

Section 4. Polygraph Examination

A. No employee shall be compelled to submit to a polygraph examination. No disciplinary action whatsoever shall be taken against an employee refusing to submit to a polygraph examination; nor shall any comment be anywhere recorded indicating that an employee offered to take, took, or refused to take a polygraph examination, unless otherwise agreed to in writing by the parties; nor shall any testimony or evidence of any kind regarding an employee's offer to take or refusal to take or the results of a polygraph examination be admissible in any proceeding pursuant to this Personnel and Salary Resolution, unless otherwise agreed to in writing by the parties.

Section 5. Appeal Procedure

A. All Step 1 and Step 2 appeals must be submitted to the Human Resources Director or the employee's Battalion Chief, Division Chief, Division Manager, Section Manager, Assistant Chief, or Deputy Fire Chief within the time limits outlined in this Article. If the appeal is submitted to the employee's Battalion Chief, Division Chief, Division Manager, Section Manager, Assistant Chief, or Deputy Fire Chief, a copy shall be forwarded to the Human Resources Director. Submission of the appeal may be via mail, hand delivery, or fax; postmarks shall be accepted. Fax deliveries must be received no later than 5:00 p.m. on the last day allowable under the provisions of this Article. Any suspension, reduction, or discharge imposed by the Fire Chief may be submitted directly to arbitration in accordance with Section 6. of this Article. Any notification of intent to discharge or probationary release where the employee is alleging discrimination may be submitted directly to Step 2 of this procedure. To facilitate submittal of appeals, the employee's representative shall have the right to submit an appeal in the name of the employee at the employee's request.

1. STEP 1

a) Reprimand or Performance Salary Increase Denial – Battalion Chief, Section Manager, Division Manager, Division Chief, Assistant Chief, or Deputy Fire Chief

~~Upon receipt of a reprimand or denial of a performance salary increase, an employee may, within fourteen (14) calendar days of receipt of such notice, submit a request to the Human Resources Director, Division Chief, Division Manager, Battalion Chief, Section Manager, Assistant Chief, or Deputy Fire Chief for a meeting to address the matter. The Human Resources Director shall schedule a meeting with the appropriate Division Chief, Battalion Chief, Section Manager, Division Manager, Assistant Chief, or Deputy Fire Chief to hear the employee's presentation. After hearing the employee's presentation, the Division Chief, Battalion Chief, Section Manager, Division Manager, Assistant Chief, or Deputy Fire Chief shall issue a written determination within fourteen (14) calendar days.~~

~~b) Suspension or Reduction – Assistant Chief or Deputy Fire Chief Upon receipt of a notice of intent involving suspension or reduction, an employee may, within fourteen (14) calendar days of receipt of such notice, submit a request to the Human Resources Director, Division Chief, Division Manager, Battalion Chief, Section Manager, Assistant Chief, or Deputy Fire Chief for a meeting to address the charges in the notice. The Human Resources Director shall schedule a meeting with the appropriate Assistant Chief or Deputy Fire Chief to hear the employee's presentation. After hearing the employee's presentation, the Assistant Chief or Deputy Fire Chief shall issue a written determination relative to the intended action within fourteen (14) calendar days.~~

~~2. STEP 2~~

~~a) Reprimand or Performance Salary Increase Denial – Assistant Chief, Deputy Fire Chief, or Fire Chief~~

~~If the employee does not agree with the outcome in Step 1, the employee may, within fourteen (14) calendar days of receipt of the Step 1 written determination, submit a written appeal to the Human Resources Director, Division Chief, Division Manager, Battalion Chief, Section Manager, Assistant Chief, or Deputy Fire Chief. Within fourteen (14) calendar days of receipt of the appeal at Step 2, the appropriate Assistant Chief, Deputy Fire Chief, or Fire Chief shall meet with the appellant and his/her representative. Within fourteen (14) calendar days thereafter, a written decision shall be provided to the appellant and his/her representative. The determination shall be final and binding and not referable to arbitration.~~

~~b) Suspension, Reduction, Probationary Release Alleging Discrimination, or Discharge – Fire Chief or Deputy Fire Chief~~

~~Suspension or Reduction - If the employee does not agree with the outcome in Step 1, the employee may within fourteen (14) calendar days of the receipt of the Step 1 written determination submit a written appeal to the Human Resources Director. Within fourteen (14) calendar days of receipt of the appeal, the Fire Chief or, if designated, the Deputy Fire Chief shall meet with the appellant and his/her~~

~~representative. Within fourteen (14) calendar days thereafter, a written decision shall be provided to the appellant and his/her representative.~~

~~Probationary Release Alleging Discrimination or Discharge - If the employee receives a notice of intent to discharge, or is alleging that his/her probationary release is due to discrimination, the employee may begin his/her appeal process at Step 2 by submitting a written appeal to the Human Resources Director within fourteen (14) calendar days of receipt of such written notification. Within fourteen (14) calendar days of receipt of the appeal, the Fire Chief, or, if designated, the Deputy Fire Chief shall meet with the appellant and his/her representative. Within fourteen (14) calendar days thereafter, a written decision shall be provided to the appellant and his/her representative.~~

~~Section 6. Referrals to Arbitration~~

~~A. If the suspension, reduction, or discharge is imposed by the Fire Chief, the employee may submit the matter directly to arbitration in accordance with Section 6. of this Article.~~

~~B If the employee does not agree with the outcome at Step 2 regarding a suspension, reduction, or discharge, the employee may appeal the matter to arbitration by submitting the appeal to the Human Resources Director within fourteen (14) calendar days from the date of receipt of such Step 2 decision. As soon as practicable thereafter, or as otherwise agreed to by the parties, an arbitrator shall hear the appeal.~~

~~C. All disciplinary appeals shall be signed by the appellant or his/her representative and shall be submitted in writing.~~

~~D. Finding of Facts and Remedies~~

~~1. An arbitrator may sustain, modify, or rescind an appealed disciplinary action as follows and subject to the following restrictions:~~

~~a) All Disciplinary Actions~~

~~If the arbitrator finds that the disciplinary action was taken for reasonable cause, he/she shall then determine if the disciplinary action imposed on the employee was appropriate. The arbitrator shall have the right, and the responsibility, to modify the discipline if, in his/her opinion, it is not appropriate.~~

~~b) Suspension/Reduction~~

~~If the action is modified or rescinded, the appellant shall be entitled to restoration of pay and/or fringe benefits in a manner consistent with the arbitrator's decision and consistent with Section 6.E. of this Article.~~

~~c) Discharges~~

~~If the arbitrator finds that the order of discharge should be modified, the appellant shall be restored to a position in his/her former class subject to forfeiture of pay and fringe benefits for all or a portion of the period of time the appellant was removed from duty, as determined by the arbitrator and consistent with Section 6.E. of this Article.~~

~~If the arbitrator finds that the order of discharge should be rescinded, the appellant shall be reinstated in a position in his/her former class and shall receive pay and fringe benefits for all of the period of time he/she was removed from duty and consistent with Section 6.E. of this Article.~~

~~E. Restriction on Remedies~~

~~1. Restoration of pay and benefits shall be subject to deduction of all unemployment insurance, applicable taxes and withholdings, and outside earnings that the appellant received since the date of discharge.~~

~~F. Probationary Releases Alleging Discrimination~~

~~1. The issues to be submitted to the arbitrator in appeals filed pursuant to Article VIII shall be as follows and shall be submitted consistent with Section 6. of this Article:~~

~~a) Was the probationary release of (employee's name) in whole or in part the result of discrimination?~~

~~b) If so, what shall the remedy be under the provision of Section 6.F.2., Findings of Facts and Remedies, of this Article?~~

~~2. Findings of Facts and Remedies~~

~~a) In the event the arbitrator finds no discrimination, the appeal shall be denied and the issue of remedy becomes moot.~~

~~b) In the event the arbitrator finds discrimination, but also finds such discrimination was not a substantial cause of the employee's probationary release, the appeal shall be denied, and the issue of remedy becomes moot.~~

~~c) In the event the arbitrator finds discrimination and also finds such discrimination was a substantial cause of the probationary release of the employee, the arbitrator's award shall depend upon the significance of the violation and shall be in keeping with the following alternatives:~~

- ~~The probationary release may be sustained.~~
- ~~The employee may be reinstated in a position in his/her former class subject to forfeiture of pay and fringe benefits for all or a portion of the period of time the employee was removed from duty. The employee may be required to serve the remainder of any outstanding probation period.~~
- ~~The employee may be reinstated in a position in his/her former class with full back pay and benefits for all the period of time the employee was removed from duty. The employee may be required to serve the remainder of any outstanding probation period.~~

~~Section 7. General Provisions~~

~~A. If the appeal is decided by an arbitrator, the appellant and his/her representative relinquish any current or future claim to seek or obtain remedy through any other Authority appeal procedures.~~

~~B. The cost of an arbitrator shall be shared equally in all cases by the Authority and the appealing party, except when the appealing party solely alleges discrimination, in which case, the Authority shall bear the full cost. When the appeal involves both discrimination and other arbitrable issues, the proper division of costs shall be determined by the arbitrator.~~

~~C. Appeal hearings by an arbitrator shall be private.~~

~~D. Arbitration appeal hearings for suspensions of less than forty (40) hours shall be limited to one (1) day, unless both parties agree that a longer hearing is necessary. Both parties shall be allotted equal time during arbitration hearings involving such suspensions. The one (1) day limitation for arbitration appeal hearings shall not apply to suspensions imposed by the Fire Chief.~~

~~E. The arbitrator shall be selected by the mutual agreement of the parties. If the parties cannot agree upon an arbitrator, a list of seven (7) arbitrators shall be obtained from the California State Conciliation Service, the American Arbitration Association, or some other agreed upon source, and each party shall alternately strike one (1) name from the list until only one (1) name remains.~~

~~F. Upon written request by the opposing party in a pending hearing given at least twenty-eight (28) calendar days prior to the scheduled hearing date, the party requested shall supply to the party submitting the requested copies of all documentary evidence to be used by that party at the hearing. Such evidence shall be provided no later than fourteen (14) calendar days prior to the scheduled hearing date. Any evidence not so provided may not be admitted or offered as evidence at the subsequent hearing, except that any such documentary evidence discovered by a party after such a request for copies, but not soon enough to comply with the above time limits, may be admitted, provided it could not have been discovered sooner by reasonable means and provided further that a copy or copies of such evidence be afforded the requesting party as soon as practicable after such discovery. Nothing~~

~~contained herein shall operate to prevent either party from presenting additional documents by way of rebuttal.~~

~~G. An employee shall not suffer loss of pay for time spent as a witness at an arbitration hearing held pursuant to this procedure. The number of witnesses requested to attend and their scheduling shall be reasonable and scheduled in advance.~~

~~H. At the hearing, both the employee and/or his/her representative and the Authority shall have the right to be heard and to present evidence. The following rules shall apply:~~

~~1. Oral evidence shall be taken only on oath or affirmation.~~

~~2. Each party shall have these rights: to call and examine witnesses, to introduce exhibits, to cross-examine opposing witnesses on any matter relevant to the issues even though that matter was not covered in the direct examination, to impeach any witness regardless of which party first called the witness to testify, and to rebut the evidence against the witness. If the employee does not testify in his/her own behalf, the employee may be called and examined as if under cross-examination.~~

~~I. The hearing need not be conducted according to technical rules relating to evidence and witnesses. Any relevant evidence shall be admitted, if it is the sort of evidence on which responsible persons are accustomed to rely in the conduct of serious affairs, regardless of the existence of any common law or statutory rule that might have made improper the admission of such evidence over objection in civil actions. Hearsay evidence may be used for the purpose of supplementing or explaining any direct evidence, but shall not be sufficient in itself to support a finding, unless it would be admissible over objection in civil actions. The rules of privilege shall be effective to the same extent that they are not, or hereafter may be, recognized in civil actions, and irrelevant and unduly repetitious evidence shall be excluded.~~

~~J. The Authority shall be allowed to have at least one (1) employee who may be called upon to testify as a witness present at the arbitration hearing at all times.~~

~~K. The decision of the arbitrator shall be final and binding on all parties.~~

~~ARTICLE IX~~

~~GRIEVANCE PROCEDURE~~

~~Section 1. Scope of Grievances~~

~~A. A grievance may be filed if a management interpretation or application of the provisions of this Personnel and Salary Resolution, Part 2 adversely affects an employee's wages, hours, or conditions of employment. In addition, disputes involving performance evaluations rated substandard may be processed through the grievance procedure.~~

~~B. Specifically excluded from the Scope of Grievances are:~~

~~1. Subjects involving the amendment or change of Board of Directors resolutions, ordinances, or minute orders that do not incorporate the provisions of this Personnel and Salary Resolution;~~

~~2. Matters that have other means of appeal, including, but not limited to, matters that may be appealed through the Workers' Compensation Appeals Board;~~

~~3. Position classification;~~

~~4. Performance evaluations rated standard or above.~~

~~Section 2. Basic Rules~~

~~A. If an employee does not present a grievance or does not appeal the decision rendered regarding his/her grievance within the time limits, the grievance shall be considered resolved.~~

~~B. If an Authority representative does not render a decision to the employee within the time limits, the employee may, within fourteen (14) calendar days, thereafter appeal to the next step in the procedure.~~

~~C. If it is the judgment of any management representative that he/she does not have the authority to resolve the grievance, he/she may refer it to the next step in the procedure. By mutual agreement of the Authority and the employee and/or his/her representative, Step 1 of the grievance procedure may be waived.~~

~~D. Upon prior written consent of the parties (i.e., the representatives of the Authority and the employee or his/her representative), the time limits at any step in the procedure may be extended.~~

~~E. Every reasonable effort shall be made by the employee and the Authority to resolve a grievance at the lowest possible step in the grievance procedure.~~

F. No claim shall be granted for retroactive adjustment of any grievance prior to ninety (90) calendar days from the date of filing the written grievance at Step 1.

G. The employee shall have the right to a representative present throughout the grievance process.

H. In order to encourage candid discussion and compromise in attempting to resolve grievances, the Authority and the employee and/or his/her representative agree that the grievance files of the respective parties shall be confidential.

Section 3. Submission of Grievances

A. Any employee or group of employees shall have the right to present a grievance. No employee or group of employees shall be hindered from or disciplined for exercising this right.

B. If any two (2) or more employees have essentially the same grievance, they may, and if requested by the Authority must, collectively present and pursue their grievance if they report to the same immediate supervisor.

C. If the grievant is a group of more than three (3) employees, the group shall, at the request of the Authority, appoint one (1) or two (2) employees to speak for the collective group.

Section 4. Employee Representation

A. An employee may represent himself/herself or may be represented by his/her representative in the formal grievance procedure.

Section 5. Time Off for Processing Grievances

A. Reasonable time off without loss of pay shall be given to:

1. An employee who has a grievance, in order to attend a meeting with his/her supervisor or other person with authority to resolve the matter, as prescribed herein.

2. An authorized grievance representative, in order to attend a meeting with the represented grievant's supervisor or other person with authority to resolve the grievance, as prescribed herein, or to obtain facts concerning the action grieved through discussion with the grievant or other employees.

B. The following restrictions shall apply in all cases to activity authorized in Section 5.A. of this Article:

1. Before performing grievance work, the grievant or grievance representative shall obtain permission of his/her supervisor, if applicable,

~~and shall report back to the supervisor when the grievance work is completed.~~

~~2. Neither the grievant nor the grievance representative shall interrupt or leave his/her job to perform grievance work, if applicable, unless his/her supervisor determines that such interruption or absence shall not unduly interfere with the work of the unit in which the grievant or representative is employed. However, an effort shall be made to grant such time off as soon as it is feasible to do so.~~

~~3. When an authorized grievance representative must go into another section or unit to investigate a grievance, if applicable, the representative shall be permitted to do so provided that:~~

~~a) The representative checks in and checks out with the supervisor of the unit; and~~

~~b) Such investigation will not unduly interfere with the work of the unit.~~

~~Section 6. Informal Discussion~~

~~A. If an employee has a problem relating to a work situation, the employee is encouraged to request a meeting with his/her immediate supervisor to discuss the problem in an effort to clarify the issue and to work cooperatively toward settlement.~~

~~Section 7. Formal Grievance Steps~~

~~A. The grievance procedure shall consist of the following steps, each of which must be completed prior to any request for further consideration of the matter, unless waived by mutual consent or as otherwise provided herein.~~

~~B. All Step 1 and Step 2 grievances must be submitted to the Human Resources Director, the employee's Battalion Chief, Section Manager, Division Manager, Division Chief, Assistant Chief, or Deputy Fire Chief within the time limits outlined in this Article. If the grievance is submitted to the employee's Battalion Chief, Section Manager, Division Manager, Division Chief, Assistant Chief, or Deputy Fire Chief, a copy shall be forwarded to the Human Resources Director. Submission may be via mail, hand delivery, or fax; postmarks shall be accepted. Fax deliveries must be received no later than 5:00 p.m. on the last day allowable under the provisions of this Article. A grievance may be filed by an employee or the employee's representative in the name of the employee, at the employee's request.~~

~~1. STEP 1: Battalion Chief, Section Manager, Division Manager, Division Chief, Assistant Chief, or Deputy Fire Chief~~

~~a) If an employee has a grievance, the employee or the employee's representative, on behalf of the employee, may formally submit a grievance to the Human Resources Director, Battalion Chief, Section Manager, Division Manager, Division Chief, Assistant Chief, or Deputy Fire Chief within fourteen (14) calendar days from the~~

~~occurrence that gives rise to the problem. A Step 1 grievance shall be heard by a Battalion Chief, Section Manager, Division Manager, Division Chief, Assistant Chief, or Deputy Fire Chief. In those cases where the employee's immediate supervisor is the subject of the grievance, the employee's immediate supervisor and the next level supervisor shall meet with the grievant within the time limit.~~

~~b) Such submission shall be in writing and shall state the nature of the grievance and the suggested solution. Within fourteen (14) calendar days after receipt of the written grievance, the Battalion Chief, Section Manager, Division Manager, Division Chief, Assistant Chief, or Deputy Fire Chief shall meet with the grievant.~~

~~c) Within fourteen (14) calendar days thereafter, a written decision shall be given to the grievant. The written decision at Step 1 shall be signed by the reviewing officer.~~

~~2. STEP 2: Fire Chief, Deputy Fire Chief, or Assistant Chief~~

~~a) If the grievance is not settled under Step 1 and it concerns an alleged misinterpretation or misapplication of this Personnel and Salary Resolution, Part 2, it may be appealed in writing to the Human Resources Director within fourteen (14) calendar days after receipt of the written decision from Step 1. Within fourteen (14) calendar days after receipt of the written grievance, the Fire Chief or, if designated, the Deputy Fire Chief or appropriate Assistant Chief, shall meet with the grievant and his/her representative. Within fourteen (14) calendar days thereafter, a written decision shall be given to the grievant and his/her representative. The decision of the Fire Chief or his/her designee, regarding a substandard performance evaluation, shall be final and binding and shall not be referable to arbitration.~~

~~Section 8. Referrals to Mediation~~

~~A. As an alternative to proceeding directly to arbitration after completion of Step 2, the parties may mutually agree to submit a grievance to mediation. A request for mediation may be presented in writing to the Human Resources Director within fourteen (14) calendar days from the date a decision was rendered at Step 2. A request for mediation shall automatically suspend the normal processing of a grievance until the mediation process is completed. The Authority shall respond to a request for mediation within fourteen (14) calendar days. The mediation process shall be optional, and any opinion expressed by the mediator shall be informal and shall be considered advisory. Should the mediation process not be successful, within fourteen (14) calendar days after completion of the mediation process, an arbitration request may be filed pursuant to Section 9. of this Article.~~

~~Section 9. Referrals to Arbitration~~

~~A. If a grievance is not resolved under Step 2 or mediation, an arbitration request may be submitted in writing by the employee and/or his/her representative to the Human Resources Director within fourteen (14) calendar days from the~~

~~date a decision was rendered at Step 2 or the completion of the mediation process. As soon as practicable thereafter, or as otherwise agreed to by the parties, an arbitrator shall hear the grievance.~~

~~B. The parties shall either sign a joint issue submission statement or else execute and sign separate alternative issue statements after discussing the issue(s). In either case, the parties shall send copies of their joint or separate submission statement(s) to each other within fourteen (14) calendar days before the first scheduled date of the arbitration hearing.~~

~~Section 10. General Provisions~~

~~A. If the grievance is decided by an arbitrator, the grievant and his/her representative shall relinquish any current or future claim to seek or obtain remedy through any other Authority appeal procedures.~~

~~B. The cost of an arbitrator shall be shared equally in all cases by the Authority and the appealing party, except when the appealing party solely alleges discrimination, in which case, the Authority shall bear the full cost. When the grievance involves both discrimination and other arbitrable issues, the proper division of costs shall be determined by the arbitrator.~~

~~C. Grievance hearings by an arbitrator shall be private.~~

~~D. The arbitrator shall be selected by the mutual agreement of the parties. If the parties cannot agree upon an arbitrator, a list of seven (7) arbitrators shall be obtained from the California State Conciliation Service, the American Arbitration Association, or some other agreed upon source, and each party shall alternately strike one (1) name from the list until only one (1) name remains.~~

~~E. Upon written request by the opposing party in a pending hearing given at least twenty-eight (28) calendar days prior to the scheduled hearing date, the party requested shall supply to the party submitting the request copies of all documentary evidence to be used by that party at the hearing. Such evidence shall be provided no later than fourteen (14) calendar days prior to the scheduled hearing date. Any evidence not so provided may not be admitted or offered as evidence at the subsequent hearing, except that any such documentary evidence discovered by a party after such a request for copies, but not soon enough to comply with the above time limits, may be admitted, provided it could not have been discovered sooner by reasonable means and provided further that a copy or copies of such evidence be afforded the requesting party as soon as practicable after such discovery. Nothing contained herein shall operate to prevent either party from presenting additional documents by way of rebuttal.~~

~~F. An employee shall not suffer loss of pay for time spent as a witness at an arbitration hearing held pursuant to this procedure. The number of witnesses requested to attend and their scheduling shall be reasonable and scheduled in advance.~~

~~G. At the hearing, both the employee and/or the employee's representative and the Authority shall have the right to be heard and to present evidence. The following rules shall apply:~~

~~1. Oral evidence shall be taken only on oath or affirmation.~~

~~2. Each party shall have these rights: to call and examine witnesses, to introduce exhibits, to cross-examine opposing witnesses on any matter relevant to the issues even though that matter was not covered in the direct examination, to impeach any witness regardless of which party first called the witness to testify, and to rebut the evidence against the witness. If the employee does not testify in his/her own behalf, the employee may be called and examined as if under cross-examination.~~

~~H. The hearing need not be conducted according to technical rules relating to evidence and witnesses. Any relevant evidence shall be admitted if it is the sort of evidence on which responsible persons are accustomed to rely in the conduct of serious affairs, regardless of the existence of any common law or statutory rule that might have made improper the admission of such evidence over objection in civil actions. Hearsay evidence may be used for the purpose of supplementing or explaining any direct evidence, but shall not be sufficient in itself to support a finding, unless it would be admissible over objection in civil actions. The rules of privilege shall be effective to the same extent that they are now, or hereafter may be, recognized in civil actions, and irrelevant and unduly repetitious evidence shall be excluded.~~

~~I. The Authority shall be allowed to have at least one (1) employee who may be called upon to testify as a witness present at the arbitration hearing at all times.~~

~~J. The decision of the arbitrator shall be final and binding on all parties.~~

ARTICLE ~~IX~~ II

LAYOFF PROCEDURE

Section 1. General Provisions

A. This procedure shall not apply to a temporary layoff of less than four (4) consecutive weeks.

B. Section 6., Reinstatement Lists, and Section 7., Status on Reinstatement, of this Article, shall not apply if the Authority has a written agreement with an employer, public or private, that guarantees the Authority employee an offer of reasonably comparable employment with the new employer who is taking over a function formerly performed by Authority employees, and the new employer does make such an offer in writing to the employee.

C. This procedure shall not apply to employees who have special or unique knowledge or skills that are of special value in the operation of the Authority business.

Section 2. Order of Layoff

A. The Authority may abolish a position because of change in duties or organization or shortage of work or funds which, in turn, may require the layoff of one (1) or more employees. When a layoff is implemented, employees in regular positions and those occupying limited-term positions at the direction of the Fire Chief shall be laid off in the following order within a class:

1. Employment Status

   Except as provided in Section 1.C. of this Article, all new probationary employees and employees on temporary promotion shall be removed from the class.

2. Past Performance

   Any employee whose last regularly scheduled performance evaluation was rated “Substandard” as provided in Part 2, Article IX, Section 1.A., and who has received a subsequent interim performance evaluation rated “Substandard,” shall be subject to layoff before employees subject to Section 2.A.3. of this Article.

3. Service Hours

   After all new probationary employees, employees on temporary promotion, and employees subject to layoff under Section 2.A.2. of this Article have been removed from a class within a layoff unit, the employee with the lowest number of service hours shall be subject to layoff first. When two (2) or more employees have the same number of service hours, the Authority shall determine the order of layoff for these employees.

B. Layoffs shall be made by class within the Authority, except that:

1. Where a class has a dual or multiple concept, the Human Resources Director may authorize a layoff by specialty within the class.

2. Where appropriate, the Human Resources Director may authorize a layoff by division or smaller unit.

C. If a layoff is going to be made in a class from which an employee has left through a temporary promotion, the employee on temporary promotion shall be returned to his/her former class and shall be subject to layoff in accordance with this procedure.

Section 3. Notification of Employees

A. Written notice of layoff shall be given to an employee or sent by mail to the last known mailing address at least fourteen (14) calendar days prior to the effective date of the layoff. Notices of layoff shall be served on employees personally at work, whenever practicable.

B. It is the intent of the Authority that the number of layoff notices initially issued shall be limited to the number of positions by which the workforce is intended to be reduced. Additional notices shall be issued as other employees become subject to layoff as a result of employees exercising reduction rights under Section 4 of this Article.

C. The notice of layoff shall include: the reason for the layoff, the proposed effective date of the layoff, the employee's hire date, the employee's service hours, a list of classes in the employee's occupational series within the layoff unit, the employee's rights under Sections 4 and 5 of this Article, and the right of the employee to advise the Authority of any objection to the content of the layoff notice prior to the proposed effective date of the layoff.

Section 4. Voluntary Reduction in Lieu of Layoff

A. A promotional probationary or regular employee who is subject to layoff may request a reduction to a lower class within the same occupational series in the layoff unit, provided the employee possesses the minimum qualifications for the class and passes any required performance tests. The reduction shall be made if there is a vacant position in the layoff unit or an incumbent in the lower class in the layoff unit has fewer service hours than the employee requesting the reduction. In the latter case, the incumbent in the lower class with the lowest number of service hours shall be subject to layoff.

B. 1. Employees who receive notice of layoff by personal service at work shall have until the end of their third regularly scheduled day of work, following actual receipt of the notice, to notify the Authority in writing of their intent to exercise rights under this Section. Employees whose third

regularly scheduled day of work is more than three (3) calendar days after receipt of the notice shall have three (3) calendar days, excluding weekends and holidays, to notify the Authority of their intent to exercise rights under this Section; and where such notification is not in writing, the employee shall confirm the notification in writing as soon as practicable.

2. Employees who receive notice other than by personal service at work shall have five (5) calendar days, excluding weekends and holidays, following the date the employee is personally served, or if service is made by mail, five (5) calendar days, excluding weekends and holidays, following the date of proof of service by mail, to notify the Authority of their intent to exercise rights under this Section. Where such notification is not in writing, the employee shall confirm the notification in writing as soon as practicable.

C. Failure by an employee to respond to the Authority pursuant to this Section shall result in a rebuttable presumption that the employee does not intend to exercise any right of reduction to a lower class, and that the employee's hire date stated in the layoff notice was correct.

D. No employee action or inaction referred to in this Section shall be considered a waiver of an employee's right to file grievances concerning any matter within the scope of the grievance procedure.

Section 5. Voluntary Reduction from Classes Designated as Vulnerable to Layoff

A. An employee in a class designated by the Authority as vulnerable to layoff may request a voluntary reduction to any class, provided the employee possesses the minimum qualifications for the class, and has passed any required performance tests for the class to which reduction is requested. Such employees shall be eligible for consideration for available positions in the class to which reduction is requested. If appointed, such an employee shall be placed on AUTHORITY REINSTATEMENT LISTS pursuant to Section 6.A.3. of this Article.

Section 6. Reinstatement Lists

A. The following persons shall be placed on AUTHORITY REINSTATEMENT LISTS as provided in Sections 6.A.1., 6.A.2., and 6.A.3. of this Article in the order of their respective service hours with the person having the largest number of service hours listed first, except that employees laid off pursuant to Section 2.A.2. of this Article shall be placed in service hour order after all other employees.

1. Persons Laid Off - The names of persons laid off shall be placed on a REINSTATEMENT LIST for each class in the occupational series at or below the level of the class from which laid off.

2. Persons Who Exercise Their Rights under Section 4. of this Article - The names of persons who exercise their rights under Section 4. of this

Article shall be placed on a REINSTATEMENT LIST for each class in the occupational series at or below the level of the class from which reduced, excluding any classes at or below the level of the class currently held.

3. Persons Who Voluntarily Reduced Under the Provisions of Section 5. of this Article - The names of persons who were voluntarily reduced under the provisions of Section 5. of this Article shall be placed on a REINSTATEMENT LIST for the class from which reduced and for each class in the occupational series below the level of the class from which they voluntarily reduced, provided they request to be placed on such Lists.

Positions to be filled shall be offered first to persons on the REINSTATEMENT LIST for that class, starting at the top of the List. If reinstatement is offered to a class other than that from which the person was laid off or reduced, such person must first meet the minimum qualifications for the class, and pass any required performance tests for that class.

B. Names of persons placed on the REINSTATEMENT LIST shall remain on the Lists for two (2) years, except that:

1. A person who, on two (2) separate occasions, rejects or fails to respond within five (5) calendar days to offers of employment in a particular class shall be removed from the Lists for that class.

2. A person who, on three (3) separate occasions, declines referral for interviews in a particular class shall be removed from the Lists for that class.

3. A person who retires from the Authority shall be removed from all Lists.

C. The Lists may be extended for a period not to exceed one (1) year, at the discretion of the Human Resources Director prior to thirty (30) days before the Lists' expiration dates.

D. REINSTATEMENT LISTS shall be available to affected employees upon reasonable request.

Section 7. Status on Reinstatement

A. An employee who has been laid off under the provisions of this Article and subsequently reinstated in a regular or limited-term position within a two (2) year period from the date of his/her layoff shall receive the following considerations and benefits:

1. All sick leave credited to the employee's account when laid off shall be restored.

2. All service hours held upon layoff shall be restored.

3. All prior service shall be credited for the purpose of determining sick leave and vacation earning rates and service awards.

4. The employee shall be placed in the salary range as if the employee had been on a Leave of Absence Without Pay.

5. The probationary status of the employee shall be as if the employee had been on a Leave of Absence Without Pay, except that a probation period shall be established as determined by Part 2, Article III, Section 3.B. if reinstatement is in a higher class or an occupational series different from that employed in at the time of layoff.

B. An employee who has voluntarily reduced under the provisions of this Article and subsequently is reinstated in a regular or limited-term position in the class from which the employee reduced within a two (2) year period from the date of reduction shall receive the following considerations: The employee shall be placed in the salary range either as if the employee had been on a Leave of Absence Without Pay or at the same point/rate on the salary range as the employee's salary in the lower class, whichever is higher. The probationary status of the employee shall be as if the employee had been on a Leave of Absence.

C. When an employee is reduced under the provisions of this Article and is subsequently reinstated in a class higher than the one from which the employee was reduced, the employee shall be deemed returned to the class from which the employee had been reduced as provided above, and the employee's salary and probation period shall be determined by treating the employee as though he/she is being promoted from such class.

ARTICLE ~~XI~~ III

ON-THE-JOB INJURIES, WORKERS' COMPENSATION

Section 1. Medical Treatment

A. Whenever an employee sustains an injury or disability arising out of and in the course of Authority employment that requires medical treatment, the employee shall obtain treatment pursuant to the appropriate California Labor Code Sections.

Section 2. Disability Payments and Leave

A. Workers' compensation supplement pay shall begin the same day as the workers' compensation temporary disability benefits. Prior to qualifying for workers' compensation temporary disability benefits, an injured employee may, at his/her option, use any accrued sick leave, compensatory time, and/or vacation, in that order.

B. While an employee receives workers' compensation supplement pay, no deductions nor payments shall be made from any sick leave, compensatory time**,** or vacation time previously accumulated by the employee. The employee shall not accrue sick leave or vacation credit during the period in which the employee receives workers' compensation temporary disability benefits.

C. The probation period of any employee who receives workers' compensation benefits shall be extended by the length of time the employee receives such benefits, except that the first fifteen (15) consecutive calendar days from the date of the injury shall be considered Authority service for completion of the probation period.

D. When an employee is no longer entitled to receive workers' compensation supplement pay, the employee may, at his/her option, use sick leave, compensatory time, and vacation, in that order, if the employee is compelled to be absent from duty as set forth in Section 2.B. of this Article.

E. Time during which an employee receives workers' compensation temporary disability benefits shall be counted toward the computation of Authority seniority and determination of sick leave and vacation earning rates.

F. Authority employees covered by Section 4850 of the Labor Code shall receive leave and benefits as provided by Section 4850.

G. Whenever an employee is compelled to be absent from duty by reason of injury or disease arising out of and in the course of Authority employment, the employee shall receive workers' compensation supplement pay that, when added to the workers' compensation temporary disability benefit, shall equal

eighty (80) percent of the employee's base salary for a period not to exceed one (1) year, including holidays.

H. When an injury is determined to be job-related by the Authority or by the Workers' Compensation Appeals Board, eighty (80) percent of all sick leave, compensatory time, and/or vacation expended since the fourth day of disability shall be restored to the employee's account(s), except that if the injury required the employee's hospitalization or caused disability of more than fourteen (14) days, eighty (80) percent of all sick leave, compensatory time**,** and/or vacation expended since the first day of disability shall be restored to the employee's account(s).

Section 3. Exposure to Contagious Diseases

A. Whenever an employee is compelled by direction of an Authority designated physician to be absent from duty due to an on-the-job exposure to a contagious disease, the employee shall receive regular compensation for the period absent from duty.

Section 4. Injury to Volunteer Reserve Firefighter

A. Whenever an employee who is also a Volunteer Reserve Firefighter is compelled to be absent from his/her regular employment due to injury arising out of and in the course of his/her volunteer service as a Volunteer Reserve Firefighter, such employee shall receive temporary disability and/or permanent disability as prescribed by the California Labor Code relative to workers' compensation benefits.

ARTICLE IV~~XII~~

SAFETY

Section 1. General Provisions

A. The Authority shall make reasonable efforts to provide and maintain a safe place of employment. Employees shall be alert to unsafe practices, equipment, and conditions and report any such unsafe practices, equipment, or conditions to their immediate supervisors. Employees shall follow safe practices and obey reasonable safety rules during the hours of their employment.

B. Any employee who either does not receive an answer to a safety-related question from his/her supervisor within three (3) days, or receives an answer that the employee deems unsatisfactory, may directly contact the designated Authority Safety Officer.

C. Any employee who is directed to perform a task that the employee in good faith feels is unsafe may request an immediate investigation from the designated Authority Safety Officer. During the period that the designated Authority Safety Officer is conducting an investigation, the employee shall be assigned to other work at no loss of earnings. If the task is ruled to be safe by the designated Authority Safety Officer, the employee shall be required to perform the duties assigned.

D. In accordance with OCFA standard operating procedure HR 04.01~~AM 115.02~~, the Authority shall establish guidelines to notify the investigative team of the existence of a serious injury or fatality involving an employee and to secure the scene until such time as the investigative team can conduct an investigation of the serious injury or fatality. This would involve securing the equipment directly involved, the immediate area to the incident, and the apparatus directly involved.

E. The Authority shall furnish all equipment that is necessary for employees to perform their job in a safe manner.

F. Wherever practicable, the Authority shall provide the necessary first aid kits in each location.

G. Wherever practicable, the Authority shall provide first aid training for one (1) employee at each new work location.

H. No employee shall be required to work under conditions dangerous to the employee's health or safety.

Section 2. Abatement of Violations

A. In any instance in which the Authority is cited for a violation of California/OSHA, the Authority shall abate the cited hazard to health or safety within the abatement period required.

~~ARTICLE XIII~~

~~INSURANCE~~

~~Section 1. CalPERS Health Care~~

~~A. The Authority shall continue to maintain its contract with the California Public Employees Retirement System (CalPERS) for employees' health care coverage.~~

~~B. Except as provided in Sections 1.C.1. and 1.C.2. of this Article, the Authority shall contribute towards the payment of health care premiums under the CalPERS Health Benefits Plan on behalf of each eligible active employee and each eligible retiree, an equal contribution as set forth in California Government Code 22892.~~

~~C. The Authority shall continue to maintain its Section 125 Cafeteria Plan for active eligible employees and pay the following amounts for employees' health care coverage and other benefits:~~

~~1. Except as modified in Section 1.D. of this Article, each full-time (regular, limited-term, or probationary) employee shall receive the dollar value of one hundred (100) percent of the employee's health plan premium or seventy-five (75) percent of the total health plan premium selected by the employee, whichever is greater. That amount shall include the contribution towards the employee's Cafeteria Plan as set forth in California Government Code Section 22892. The employee may elect to contribute the entire value to his/her health care premium or allocate a portion of the value to other benefits offered under the Cafeteria Plan. If the employee elects to allocate part of the value to other benefits, any unpaid balance of the employee's health care premium shall be deducted from the employee's paycheck.~~

~~2. Except as modified in Section 1.D. of this Article, each part-time (regular, limited-term, or probationary) employee shall receive the dollar value of fifty (50) percent of the employee's health plan premium or thirty-seven and five-tenths (37.5) percent of the total health plan premium selected by the employee, whichever is greater, and that amount shall include the contribution towards the employee's Cafeteria Plan as set forth in California Government Code Section 22892, provided the employee's normal workweek consists of at least twenty (20) hours. Health care coverage and other benefits as provided as part of the Cafeteria Plan shall be terminated for any employee whose normal workweek is reduced to less than twenty (20) hours. The employee may elect to contribute the entire value to his/her health care premium or allocate a portion of the value to other benefits offered under the Cafeteria Plan. If the employee elects to allocate part of the value to other benefits, any unpaid balance of the employee's health care premium shall be deducted from the employee's paycheck.~~

D. For employees who are on approved Family Leave, pursuant to Part 2, Article V, Section 11. and applicable law, the Authority shall continue to pay health insurance premiums as provided in Sections 1.C.1. and 1.C.2. of this Article to the extent required by applicable law.

E. Upon showing sufficient proof of alternate health care coverage, other than an Authority funded or administered plan, such as a certificate of coverage, a full-time or part-time (regular, limited-term or probationary) employee shall be entitled to a fifty-five (55) dollar biweekly credit to his/her Cafeteria Plan, in lieu of the amount provided in Sections 1.C.1. and 1C.2. of this Article. This credit may be applied towards benefits offered under the Cafeteria Plan, including accidental death and dismemberment insurance or miscellaneous pay.

F. Effective January 1, 2003, except as provided in Section 1.B. of this Article, the health premium contribution benefit described in Section 1. of this Article shall be replaced with the following alternative benefit:

1. All Administrative Managers shall receive a monthly cash allotment in the amount of six hundred (600) dollars to be applied toward health care coverage and other benefits. This amount shall be adjusted effective January 1, 2003, and annually thereafter, on a continuous basis each January in the amount equal to the average percentage increase of the CalPERS Health Plans for that year. The average percentage increase shall be computed by averaging the increase in the CalPERS Health Plans in which the employees are eligible to participate, with the exclusion of the Plan with the highest premium.

2. In addition to purchasing health care coverage, the employee, at his/her option, may receive any or all remaining funds in cash or defer such funds to an Authority offered Deferred Compensation Plan.

Section 2. Health Plan Enrollment

A. Newly hired eligible employees must enroll for coverage in health plans within the first sixty (60) days of employment. If the employee fails to enroll within the first 60 days of employment, he/she must either wait until the next open enrollment period or 90 days after submission of a late enrollment form. Health plan coverage shall become effective the first day of the month following submission to the Authority of the Health Benefits Enrollment form.

B. Employees who are terminated due to disciplinary action or reduction in force, or who voluntarily resign from employment, may continue their health care coverage until the end of the month following the month in which the employee is terminated. However, the Authority's contribution towards the employee's health care coverage the month following termination shall be in accordance with California Government Code Section 22892.

C. An employee shall be given the opportunity to enroll in a medical plan or to change medical plans on the effective date of his/her retirement.

D. In all health plans, the Authority shall provide a minimum one (1) month period, each fiscal year, for open enrollment of employees and employees' dependents.

E. Two (2) full-time employees married to each other who elect coverage in the same health plan shall be enrolled as employee and dependent. Such employees shall have the full cost of coverage for employee and dependents paid by the Authority. Employees shall not, however, be enrolled simultaneously in an Authority health care plan and a health plan administered by the Orange County Professional Firefighters Association, Local 3631, either as an employee or dependent.

Section 3. Other Insurance Coverage

A. The Authority shall provide to all full-time (regular, limited-term, and probationary) employees the following:

1. Short-term disability insurance coverage, at no cost to the employee, to provide, after sick leave is exhausted, sixty (60) percent of salary per month for up to one (1) year for certified non-occupational injury or illness in accordance with the plan benefits schedule. Coverage shall also provide for continuation of the Authority's share of premiums for health, dental, and life insurance benefits while the employee is on Official Leave for Non-occupational Disability for up to one (1) year from the effective date of disability.

2. Long-term disability insurance coverage, at no cost to the employee, to provide up to sixty (60) percent of salary per month in accordance with the plan benefits schedule.

3. Life insurance and accidental death and dismemberment insurance, at no cost to the employee, shall be provided at amounts based upon the employee's annual base salary, rounded to the next closest ten thousand (10,000) dollars and adjusted annually on each January 1, if require. Employees shall have the option to purchase additional life and accidental death and dismemberment coverage, including dependent coverage.

4. Dental and orthodontia insurance coverage, at no cost to the employee, for the employee and dependents. Part-time (regular, limited-term, and probationary) employees shall have the option of purchasing dental insurance for the employee and dependents by paying one-half (½) the monthly rate paid by the Authority for full-time employees, provided the employee's normal workweek consists of at least twenty (20) hours.

5. Vision care insurance coverage, at no cost to the employee, for the employee and dependents.

~~Section 4. Premium Only Plan~~

~~A. The Authority shall administer a Premium Only Plan (POP) that shall allow an employee to pay for health insurance premiums as permitted in the Internal Revenue Code. Under the POP, an employee's gross taxable salary shall be reduced by the amount of his/her share of the premium costs of Authority-provided health insurance coverage.~~

~~Section 5. Retiree Medical Insurance Grant *("Defined Benefit Plan)*~~

~~A. Retiree Medical Insurance Grant~~

~~1. The Authority shall administer a Retiree Medical Insurance Grant plan, which will also be referred to herein as a "defined benefit plan" for employees who have retired or terminated from Authority SERVICE and who meet the eligibility requirements as set forth in Section 5.B., of this Article.~~

~~2. Upon paid Authority retirement, an eligible retiree who has enrolled in a "qualified health plan" (as defined in the Authority Retiree Medical Plan effective January 1, 1997) or in Medicare as stated in the Retiree Medical Plan and required by the "qualified health plan," shall receive a Retiree Medical Insurance Grant.~~

~~3. An eligible former employee who terminated from Authority service prior to retirement, who is 55 years of age or older and who is enrolled in a recognized health plan or Medicare as stated in the Retiree Medical Plan and required by the "recognized health plan," shall receive a Retiree Medical Insurance Grant.~~

~~4. The Retiree Medical Insurance Grant may be applied only towards the cost of retiree and dependent coverage in a "qualified health plan", *as* reimbursement for a portion of the cost of eligible former employee and dependent coverage in a recognized health plan and/or Medicare premiums as provided in Sections 5.A.4.a) and 5.A.4.b) and 5.A.4.c), of this Article.~~

~~a) Effective January 1, 2007, the Retiree Medical Insurance Grant shall be an amount based on Sixteen (16)dollars and ninety-three (93) cents per month for each full year of service to a maximum of four hundred twenty-three (423) dollars and twenty-five (25) cents per month. On January 1 of each calendar year the amount of such Retiree Medical Insurance Grant shall be adjusted by the average percentage increase in Authority health plan premiums no later than the effective dates of such increase, not to exceed five (5) percent per year. In no case shall the Retiree Medical Insurance Grant exceed the actual cost of the health insurance and/or Medicare premiums.~~

b) All Authority employees who retire from the Authority and become eligible for a Retiree Medical Insurance Grant shall be provided a one (1) time opportunity of at least thirty (30) days to enroll in an Authority "qualified health plan," and shall have ninety (90) days after attaining age sixty-five (65) to enroll in Medicare. Should a retiree fail to enroll in either a "qualified health plan" or Medicare during the aforementioned periods or should he/she terminate coverage or fail to make necessary payments, the retiree and dependents shall forfeit any right to a Retiree Medical Insurance Grant.

c) All former employees who did not retire from the Authority and who are eligible for a Retiree Medical Insurance Grant shall not receive the Grant until such employees reach age 55 and request the Authority to commence distribution of the Grant no later than 90 days from the former employee's 55th birthday. Upon such request, the eligible former employees must show proof of enrollment in a recognized health plan. A reimbursement for a portion of the cost of premiums will be provided to the eligible former employees in accordance with the Retiree Medical Plan provisions. The eligible former employees will be required to provide the Authority with a copy of the premium bill and cancelled check or other recognized proof of payment for reimbursement.

B. Eligibility Requirements for Retiree Medical Insurance Grant

1. Retiree must be actively retired from the Authority and receiving a monthly retirement allowance from the Orange County Employees Retirement System (OCERS). An eligible former employee must be at least age 55 and enrolled in a recognized health plan.

2. Only employees hired before January 1, 2007 shall be eligible to participate in the Retiree Medical Insurance Grant Plan.

3. Retiree or eligible former employee must have retired or terminated employment with the Authority with at least one (1) year of service (2080 hours), except as provided in Section 5.B.3. a), b), and c), of this Article.

a) A retiree of the Authority who receives a service-connected disability retirement from OCERS shall be eligible for a Retiree Medical Insurance Grant equal to either ten (10) years of service or actual years of service, whichever is greater.

b) A retiree who receives a non-service connected disability retirement shall be eligible for a Retiree Medical Insurance Grant based on actual years of service.

c) A separated employee who is less than 55 years of age or is under normal retirement age who has requested a service or non-service connected disability retirement shall not be eligible to receive the Retiree Medical Insurance Grant until a determination of disability status is made by the Board of Retirement.

4. ~~All eligible retirees, eligible former employees and enrolled dependents who are age sixty-five (65) or older must be enrolled in Medicare Part B in order to be eligible for the Retiree Medical Insurance Grant. All eligible retirees, eligible former employees and dependents who are entitled to Medicare Part A coverage without a premium must be enrolled in Medicare Part A to be eligible to receive the Retiree Medical Insurance Grant.~~

5. ~~Deferred Retirement~~

   a) ~~An employee who, upon separation from Authority SERVICE, is eligible for paid retirement and elects deferred retirement must defer participation in the Retiree Medical Insurance Grant until such time as he/she becomes an active retiree. However, in order to be eligible for health care coverage provided by CalPERS, retirement must not be deferred for more than one hundred twenty (120) days after the employee separates from Authority SERVICE.~~

   b) ~~An employee with at least one (1) year of SERVICE (2080 hours), who is not eligible for paid retirement at the time he/she separates from Authority service and elects deferred retirement status shall not become eligible for participation in the Retiree Medical Insurance Grant until he/she becomes 55 years of age.~~

6. ~~For purposes of this section, a full year of SERVICE shall mean those regular hours of SERVICE the employee worked as a regular, limited-term and/or probationary employee. Two thousand eighty (2080) regular hours, exclusive of overtime, shall equal one (1) full year of SERVICE.~~

~~C. Employer Contribution~~

1. ~~The Authority will contribute one million two hundred thousand dollars ($1.2 million) each year, or at such earlier date as determined by the Board of Directors, during the term of this Agreement. OCFA's total contribution shall not exceed six million dollars ($6 million). This annual contribution is made on behalf of all OCFA participating employees, not just the ones in this bargaining unit.~~

~~D. Employee Contribution~~

1. ~~Effective January 2007 (Pay Period #2), all regular, limited-term, and probationary employees shall contribute four (4) percent of their base salary, exclusive of overtime and premium pay, through payroll deduction to the Authority to be applied to the Plan.~~

~~E. Survivor Benefits~~

1. ~~A surviving dependent who qualifies for a monthly retirement allowance shall be eligible for fifty (50) percent of the Retiree Medical Insurance Grant authorized for the retiree.~~

2. A surviving eligible retiree or eligible former employee who qualifies for a monthly retirement allowance and who was married to a retiree or eligible former employee who was also eligible for a Retiree Medical Insurance Grant shall receive the survivor benefit described in Section 5.E.1., of this Article, or his/her own Retiree Medical Insurance Grant, whichever is greater. Such retiree shall not be eligible for both Retiree Medical Insurance Grants.

F. Agreement Between the OCFA and the OCFAMA to Reopen Labor Negotiations Re the Retiree Medical Grant

The OCFA and the OCFAMA have agreed that either may reopen labor negotiations (during the term of their MOU – June 25, 2015 – June 24, 2018) on the topic of retiree medical grant if the subject is being discussed with any other bargaining unit at the OCFA.

Section 6. Defined Contribution Plan for Retiree Medical Benefits

A. The Authority will provide only to regular, limited-term and probationary employees hired on or after January 1, 2007 a "defined contribution" plan.

B. All regular, limited-term and probationary employees hired on or after January 1, 2007 will be required to contribute four (4) percent of base salary exclusive of overtime and premium pay to the Plan. Employee will not be permitted to contribute more than four (4) percent of base salary towards the Plan.

C. Employees hired before January 1, 2007 shall not be eligible to participate in the Plan. Eligibility for plan participation is based on the employee's most recent date of hire with the Authority.

Section 7. Physical Examination

A. The Authority shall provide for a full-time employee voluntary annual physical examinations by an Authority designated physician at no cost to the employee.

Section 8. Optional Benefit Plan (OBP)

A. Each eligible employee shall be entitled to select benefits from those listed below at a cost to the Authority not to exceed one thousand nine hundred (1900) dollars for each calendar year.

B. The purpose of the OBP is to provide options to individual employees to best meet the needs of themselves and dependents while relieving the employee of external influences that might impair his/her performance.

OBP options include the following two (2) benefits categories:

1. Cash (taxable);

2. Health/accident;

a) Health programs (employee and/or dependents) such as smoking cessation, stress reduction, and physical, mental, and/or emotional health-related counseling for individual and/or family not covered or partially covered through existing plans;

b) Employee's share of Authority health insurance premiums (employee and/or dependents). Also includes payment of Accidental Death and Dismemberment coverage for employee and dependents available through the Authority;

c) Health care, vision, and/or dental (employee and/or dependents) excluded or partially excluded under the Authority's insurance plans. Examples of items covered under this provision include: deductibles, eye care, lenses, and frames.

C. OBP shall be administered in accordance with the stated purpose. To be eligible, each employee must file an Intent to Participate form by December 31st each year and in accordance with provided instructions. For new employee enrollment, the amount available to the employee shall be prorated based on month(s) of eligibility. An employee's designations are irrevocable, unless he/she has a change in family status. Eligible expenses must be incurred during an OBP period in which an employee is eligible and has sufficient fund balance to cover the expense. Claims may be filed at anytime during the plan period, and all claims must be filed no later than ninety (90) days following the close of the OBP period. Upon approval and required written authorization, payment shall be made.

D. Eligibility - a regular, limited-term, or probationary employee is eligible to receive the OBP, provided he/she is continuously employed in a regular full-time capacity. Employees hired or promoted after the commencement of an OBP shall be eligible for the OBP on a prorated basis the first day of the month following the twenty-eighth day in an Administrative Management classification. Employees working in a job-sharing assignment in a full-time (regular, probationary, or limited-term) position shall be eligible to receive the OBP in proportion to each employee's regularly scheduled hours.

E. Any portion of the optional benefit not incurred within the OBP period shall remain Authority funds.

F. Claims shall be made on forms authorized by the Human Resources Director on which claimant declares the category of service received as defined in the OBP, the dates the expenses were incurred by the claimant or eligible dependents, by whom service was provided, and the amount being claimed. Claims shall be paid when submitted with a declaration under penalty of perjury signed by the claimant and approved. Only those claims that are accompanied by documentation that an eligible expense has been incurred during the OBP period shall be approved.

~~ARTICLE XIV~~

~~UNIFORMS, PROPERTY, SERVICES, AND EQUIPMENT~~

~~Section 1. Uniforms~~

~~A. The Authority shall continue the current system of providing uniforms for all employees who are currently provided uniforms.~~

~~B. The Authority shall continue to provide appropriate boots and safety footwear for all employees who are currently provided boots and safety footwear.~~

~~C. This benefit may be expanded to other classes within management's discretion based on operational needs.~~

ARTICLE XV

RETIREMENT

Section 1. Contribution Rates and Benefit Levels

A. **Employees Hired by Authority Prior to January 1, 2013**

1. The Authority will maintain the retirement formula of 2.7% at Age 55 in accordance with the following requirements:

   a. The retirement formula will apply to all current active Administrative Management employees hired prior to December 1, 2012, for all years of service as set forth in California Government Code Section 31676.19 with the measuring period set as either the highest one year or the average of the three highest years, whichever was applied to the individual employee under the prior formula.

   b. The employees will continue to assume the total cost of the benefit, which includes the Employer's Contribution Rate and Employee's Contribution Rate, calculated to a total of six (6) percent of the employee's Compensation Earnable. The Authority shall make a deduction from the employee's Compensation Earnable to offset the cost to the Authority for this retirement benefit.

   c. No employee shall receive a lesser final retirement calculation with 2.7% at Age 55 retirement formula than what he/she would have received with the prior formula.

   d. Effective January 2013 (Pay Period #4), the Authority will increase the deduction from the employee's Compensation Earnable to the amount equal to eight and twenty-five hundredths (8.25) percent to offset the cost to the Authority for this retirement benefit. This deduction shall continue during the employee's employment period with the Authority and may increase at such time that the Government Code requires the employee to contribute a greater amount.

   e. Effective February 2014 (Pay Period #5), if in accordance with Article XVII, Section 1.C, a salary adjustment is implemented, the Authority will deduct from the employee's Compensation Earnable an additional amount not to exceed a total deduction of nine (9) percent to offset the cost to the Authority for this retirement benefit. This deduction shall continue during the employee's employment period with the Authority and may increase at such time that the Government Code requires the employee to contribute a greater amount.

   f. Effective February 2015 (Pay Period #5), if in accordance with Article XVIII, Section 1.C, a salary adjustment is implemented, and

if the Authority's ongoing deduction from the employee's Compensation Earnable has not reached nine (9) percent, the Authority will deduct from the employee's Compensation Earnable an additional amount not to exceed a total deduction of nine (9) percent to offset the cost to the Authority for this retirement benefit. This deduction shall continue during the employee's employment period with the Authority and may increase at such time that the Government Code requires the employee to contribute a greater amount.

.g. Employee Contribution For the OCFAMA Bargaining Unit: Effective July 10, 2015, employees in the OCFAMA bargaining unit shall pay up to twelve and one quarter percent (12.25%) but no higher than their maximum employee contribution (based on age of entry into OCERS) if their maximum employee contribution is lower than twelve and one quarter percent (12.25%).

Effective January 8, 2016, employees in the OCFAMA bargaining unit shall pay up to fourteen and one quarter percent (14.25%) but no higher than their maximum employee contribution (based on age of entry into OCERS) if their maximum employee contribution is lower than fourteen and one quarter percent (14.25%).

Effective January 6, 2017, employees in the OCFAMA bargaining unit shall pay up to sixteen and one half percent (16.5%) but no higher than their maximum employee contribution (based on age of entry into OCERS) if their maximum employee contribution is lower than sixteen and one half percent (16.5%).

At any time beyond July 1, 2017, if there are increases to the maximum employee contribution to OCERS, employees in the OCFAMA bargaining unit will pay those employee contributions subject to contribution limits dictated by PEPRA and the corresponding amended sections of the 1937 Act that OCERS operates under.

2. The Authority shall pay toward an employee's total retirement contribution as determined by this Section and in accordance with Section 2. A of this Article, the statutory maximum allowable by the Government Code.

3. Members' normal cost-of-living contributions shall be adjusted subsequent to and in accordance with actuarial recommendations adopted by the Board of Retirement and the Authority Board.

B. **Employees Hired by Authority From December 1, 2012 Through December 31, 2012 or Employees Hired On or After January 1, 2013 With Reciprocal Retirement Benefits**

1. Effective December 1, 2012, the Authority shall implement the 2% at age 55 retirement formula for active employees who become members of this

~~group and are hired from December 1, 2012 through December 31, 2012, or hired on or after January 1, 2013 and establish reciprocity with the Orange County Employees Retirement System, for all years of service, as specified under California Government Code Section 31676.16, as follows:~~

~~a. Effective upon the employee becoming a member of the Administrative Management Group, the Authority shall make a deduction from the employee's Compensation Earnable in the amount equal to nine (9) percent to offset the cost to the Authority for this retirement benefit. This deduction shall continue during the employee's employment period with the Authority and may increase at such time the Government Code requires the employee to contribute a greater amount.~~

~~b. Employee Contribution For the OCFAMA Bargaining Unit: Effective July 10, 2015, employees in the OCFAMA bargaining unit shall pay up to twelve and one quarter percent (12.25%) but no higher than their maximum employee contribution (based on age of entry into OCERS) if their maximum employee contribution is lower than twelve and one quarter percent (12.25%).~~

~~Effective January 8, 2016, employees in the OCFAMA bargaining unit shall pay up to fourteen and one quarter percent (14.25%) but no higher than their maximum employee contribution (based on age of entry into OCERS) if their maximum employee contribution is lower than fourteen and one quarter percent (14.25%).~~

~~Effective January 6, 2017, employees in the OCFAMA bargaining unit shall pay up to sixteen and one half percent (16.5%) but no higher than their maximum employee contribution (based on age of entry into OCERS) if their maximum employee contribution is lower than sixteen and one half percent (16.5%).~~

~~At any time beyond July 1, 2017, if there are increases to the maximum employee contribution to OCERS, employees in the OCFAMA bargaining unit will pay those employee contributions subject to contribution limits dictated by PEPRA and the corresponding amended sections of the 1937 Act that OCERS operates under.~~

~~2. The Authority shall pay toward an employee's total retirement contribution as determined by this Section and in accordance with Section 2. A of this Article, the statutory maximum allowable by the Government Code.~~

~~3. Members' normal cost-of-living contributions shall be adjusted subsequent to and in accordance with actuarial recommendations adopted by the Board of Retirement and the Authority Board.~~

C. **Employees Hired by Authority On or After January 1, 2013 With No Reciprocal Retirement Benefits**

1. Effective January 1, 2013, the Authority shall implement the 2.5% at age 67 retirement formula for active employees who become members of this group and are hired on or after January 1, 2013, and do not establish reciprocity with the Orange County Employees Retirement System, for all years of service, as specified under California Government Code Section 7522.20 as follows:

   a. Effective upon the employee becoming a member of the Administrative Manager Group, the Authority shall make a deduction from the employee's Compensation Earnable in the amount equal to 50% of the normal retirement cost toward the employee's retirement contribution. This deduction shall continue during the employee's employment period with the Authority and may increase at such time the Government Code requires the employee to contribute a greater amount.

2. Members' normal cost-of-living contributions shall be adjusted subsequent to and in accordance with actuarial recommendations adopted by the Board of Retirement and the Authority Board.

Section 2. Employer's Contribution

A. The Authority shall continue to pay one hundred (100) percent of the employee's remaining retirement contribution, pursuant to Government Code 31581.2 independent of the retirement formula benefit set forth herein.

~~ARTICLE XVI~~

~~DEFERRED COMPENSATION~~

~~An employee in a regular or limited-term position may, at his/her request, participate in the Authority's Deferred Compensation Plan.~~

ARTICLE ~~X~~V~~II~~

DEPENDENT CARE ASSISTANCE PROGRAM

The Authority shall administer a Dependent Care Assistance Program that allows employees to take advantage of a salary reduction program to pay for dependent care as permitted in the Internal Revenue Code.

ARTICLE XVIII

COMPENSATION

Section 1. Range Adjustments

A. All Administrative Management classes shall receive an upward range adjustment of three (3) percent as follows:

Range Adjustment Effective Date	Pay Period
January 5, 2007	2
August 29, 2008	19
August 28, 2009	19
August 27, 2010	19
January 28, 2011	4
August 26, 2011	19
August 24, 2012	19

1. The January 5, 2007, three (3) percent range adjustment shall be contributed toward either the Retiree Medical Grant Plan set forth in Article XIII, Section 5., or the Defined Contribution Plan set forth in Article XIII, Section 6., depending on the employee's hire date.

2. Employees shall receive as a cost-of-living adjustment, salary adjustments equal to the percentage of the range adjustment described in this Section. Any adjustments within the range shall be based on the employee's Performance Award rating as presented in Part 2, Article II, Section 3.

3. Due to the economic downturn, which is negatively impacting the Authority's financial situation, the Administrative Management Group elected to forgo the range adjustment scheduled for August 28, 2009, Pay Period #19. Due to the lack of improvement in the economy, and its continued negative impact on the Authority's financial situation, the three
(3) percent range adjustment, implemented effective August 27, 2010 (Pay Period #19) is rescinded effective September 10, 2010 (Pay Period #20).

B. Future range adjustments, if warranted, will be scheduled on the following dates, in accordance with the methodology identified in Section 1.C, of this Article:

~~Range Adjustment Effective Date~~	~~Pay Period~~
~~February 2014~~	~~5~~
~~February 2015~~	~~5~~

~~C. Effective January 1, 2014, the range adjustments, will be based on the dollar amount of the corresponding fiscal year's "General Fund Surplus/(Deficit)" line item in the document identified as Five Year Financial Forecast – Baseline Model, which is included with the adopted annual budget. The dollar amount calculation and application relative to salary adjustments shall be as follows:~~

~~1. UPDATING FIVE YEAR FINANCIAL FORECAST-BASELINE MODEL~~

~~a) During the Authority's mid-year financial review, the Five Year Financial Forecast – Baseline Model document will be updated by replacing the adopted "Secured Property Tax" dollar amount, found in Section A of the document, with the actual "Secured Property Tax" dollar amount calculated by using the data submitted by the County of Orange in the document identified as Tax Ledger Detail - Orange County Fire Authority.~~

~~b) The actual "Secured Property Tax" dollar amount is calculated by starting with the dollar amount reported on the Tax Ledger Detail – Orange County Fire Authority for the line item identified as "Secured Initial Tax Levy" and then adjusting that amount by the same roll change/refund factor used in the Adopted Budget. As an example, the following are calculations for FY 2010/11:~~

~~a.~~	~~2010/11 Secured Initial Tax Levy~~	~~$166,802,437.30~~
~~b.~~	~~2010/11 Roll Change/Refund Factor of 0.75%~~	~~$ (1,251,018.28)~~
~~c.~~	~~2010/11 Actual Secured Property Tax~~	~~$165,551,419.02~~

~~c) Upon replacing the adopted "Secured Property Tax" dollar amount with the actual "Secured Property Tax" dollar amount, Section A of the Five Year Financial Forecast – Baseline Model will be recalculated, which will result in an updated "General Fund Surplus/ (Deficit)" amount.~~

~~d) Based on the amount of the "General Fund Surplus/(Deficit)", one of the following will occur:~~

- ~~If the updated "General Fund Surplus/(Deficit)" amount is less than or equal to five (5) percent of General Fund Expenditures, no range adjustments will be implemented.~~

- ~~If the updated "General Fund Surplus/(Deficit)" amount is greater than five (5) percent of the General Fund Expenditures, a range adjustment will be implemented. The Authority will distribute the amount in excess of the five (5) percent fund in~~

~~the form of a salary adjustment, not to exceed five (5) percent, to those employee bargaining units and unrepresented units that have agreed to similar terms in a manner that will provide an equal percent of base salary increase to each of the units/groups.~~

~~D. Section 1.C, of this Article, shall remain in effect through February 2015.~~

~~E. Compensation Increases for Employees of the OCFAMA:~~

~~1.Effective July 10, 2015, employees in the Orange County Fire Authority Management Association (OCFAMA) shall receive a five percent (5%) base salary increase.~~

~~2.Effective on January 8, 2016, employees in the OCFAMA shall receive a two percent (2%) base salary increase.~~

~~3.Effective on January 6, 2017, employees in the OCFAMA shall receive a one and ninety five one hundredths percent (1.95%) base salary increase.~~

~~Section 2. Specialty Pay~~

~~A. Bilingual Pay~~

~~1. Qualified employees, who meet the following criteria, shall receive an additional thirty (30) cents per hour (approximately fifty-two [52] dollars per month) for all hours actually paid.~~

~~a) An employee must be conversant in one (1) of the pre-designated languages to qualify to receive bilingual pay:~~

- ~~Spanish~~
- ~~Vietnamese~~
- ~~Korean~~
- ~~American Sign Language~~

~~b) Other languages may qualify on a case-by-case basis.~~

~~c) The employees must be approved by the Human Resources Director as per AM SOP 103.02.~~

~~2. An employee shall not be eligible to receive more than one (1) type of bilingual pay concurrently.~~

~~3. Bilingual pay shall apply to workers' compensation and be considered as part of the employee's base pay for the earnings of other benefits as provided by law.~~

~~4. A bilingual employee may be called upon to speak or translate a second language at any time, as Authority needs dictate.~~

5. An employee in a bilingual assignment may request assignment to a position that does not require bilingual certification. The request shall be made in writing to the Fire Chief who shall consider it according to:

- Authority need,
- Availability of a qualified replacement; and
- Availability of another suitable assignment for the requesting employees.

Section 3. Range Constraints

A. Any other provision of this Article notwithstanding:

1. No employee's salary shall exceed the maximum of the salary range, except pursuant to Y-Rate provisions of Part 2, Article II, Section 6.

2. No employee's salary shall be less than the minimum rate in the range assigned to the class in which he/she is employed.

Section 4. Equity Adjustments

A. The Fire Chief may, in those instances where he/she determines that it is in the best interest of the Authority, approve additional individual salary increases, provided that the amount, when added to any other increase, shall not exceed fifteen (15) percent; however, no such increase shall cause an employee's salary to exceed the maximum of the applicable salary range.

~~ARTICLE XIX~~

~~ORANGE COUNTY FIRE AUTHORITY MANAGEMENT ASSOCIATION RIGHTS~~

~~Section 1. Payroll Deductions~~

~~A. Membership dues of OCFAMA shall be deducted by the Authority from the pay checks/direct deposits of such members. The Authority shall transmit the dues so deducted to OCFAMA on a monthly basis.~~

~~Section 2. Use of Bulletin Boards~~

~~A. Space shall be made available to OCFAMA on Authority bulletin boards, provided such use does not interfere with the needs of the Authority, and material posted is not derogatory to the Authority, Authority employees, or other employee organizations. Material which interferes with the needs of the Authority or is derogatory may be removed by the Authority. Notices shall be dated and signed by the authorized representatives of the OCFAMA responsible for their issuance.~~

~~Section 3. Use of Authority Facilities~~

~~A. The OCFAMA may, with the approval of the Human Resources Director, hold meetings of their members on Authority property during non-working hours, provided the request is made to the Human Resources Director as to the specific location and dates of the meeting prior to such meeting.~~

PART 3
EXECUTIVE MANAGEMENT
ARTICLE I

TERMS AND CONDITIONS OF EMPLOYMENT

Section 1. General Provisions

A. Except as otherwise provided in this Article or by State law or action of the Board and except where the natural construction of a provision indicates otherwise, the wages, hours, and terms and conditions of employment for Executive Management employees shall be the same as adopted for employees in the Administrative Management Unit. However, any provision requiring Fire Chief approval for Administrative Management employees that could also benefit the Fire Chief shall be forwarded to the Board for approval.

Section 2. At-Will Appointments

A. Notwithstanding any other provision of this Personnel and Salary Resolution, employees appointed ~~after March 25, 1999,~~ to Executive Management positions, exclusive of the Fire Chief, shall serve at the pleasure of the Fire Chief. Prior to such an appointment, the Human Resources Director shall obtain written acknowledgement from the prospective appointee acknowledging his/her understanding of such At-Will status.

B. Such employees may be removed from their position at any time without notice, cause, or rights of appeal. In the event such employees are removed from their positions, the Authority shall provide, at the discretion of the Fire Chief, either severance pay OR reassignment as described below:

1. Severance Pay - In the event such employee is removed from his/her position prior to the third year anniversary of his/her appointment without being reassigned, the Authority shall pay a sum equal to three (3) months of the base annual salary that is in effect as of the date of the termination. In the event such employee is removed from his/her position after the third year anniversary without being reassigned, severance pay shall be increased by one (1) month for each additional year or portion thereof, up to a maximum of six (6) months in total.

2. Reassignment - In the event such employee is removed from his/her position without severance pay, the Authority shall reassign said employee to a non-Executive Management position in a lower class, in which he/she passed probation immediately prior to becoming an At-Will employee, or an equivalent position. In such event, employee shall be placed at the middle of the applicable salary range. Said reassignment shall not result in layoff of any other employee. Employees appointed to such Executive Management positions from outside the Authority shall have no rights to a lower level position.

C. Notwithstanding the provisions of this Section, the Authority shall have the right to dismiss for reasonable cause any Executive Management employee, and may do so without compliance with Sections 2.B.1. or 2.B.2. of this Article. In such an event, the provisions of Part 2, Articles VIII, DISCIPLINARY AND PREDISCIPLINARY ACTIONS, and IX, GRIEVANCE PROCEDURE, shall be fully applicable.

D. Reasonable Cause

For purposes of this Section, the term, "reasonable cause" shall include, but not be limited to, the following: (1) dishonesty, (2) insubordination, (3) incompetence, (4) neglect of duty, (5) excessive or unexcused absences, (6) possession, use, or sale of alcohol or illegal narcotics while on Authority duty or premises, (7) misuse or misappropriation of Authority property or funds, (8) conflict of interest, (9) improper political activity, (10) intentionally misrepresenting information or facts in any statement, declaration of affidavit made by an employee, (11) any conduct, act, or omission either during or outside duty hours that is of such a nature that it causes discredit to the Authority or the firefighting profession, or that conduct, act, or omission has a disruptive effect on the efficiency or integrity of the public service, (12) any violation of the Authority's General Orders or Standard Operating Procedures.

Section 3. Life Insurance

A. Executive Management employees shall receive life and accidental death and dismemberment insurance, at no cost to the employee, in an amount equal to their base annual salaries, adjusted to the closest ten thousand (10,000) dollars regardless of age with the option to purchase additional coverage, including dependent coverage.

Section 4. Optional Benefit Plan (OBP)

A. All provisions that apply to Administrative Management shall also apply to Executive Management, except that the amount of the Optional Benefit Plan shall be three thousand five hundred (3500) dollars for Executive Management employees for each calendar year.

Section 5. CalPERS Health Care

A. The Authority shall continue to maintain its contract with the California Public Employees Retirement System (CalPERS) for employees' health care coverage.

B. Except as provided in Sections 5.C.1. and 5.C.2. of this Article, the Authority shall contribute toward the payment of health care premiums under the CalPERS Health Benefits Plan on behalf of each eligible active employee and each eligible retiree, an equal contribution as set forth in California Government Code Section 22892.

C. The Authority shall continue to maintain its Section 125 Cafeteria Plan for

active eligible employees and pay the following amounts for employees' health care coverage and other benefits:

1. Except as modified in Section 5.D. of this Article, each full-time (regular, limited-term, or probationary) employee shall receive the dollar value of one hundred percent (100%) of the employee's health plan premium or seventy-five percent (75%) of the total health plan premium selected by the employee, whichever is greater. That amount shall include the contribution towards the employee's Cafeteria Plan as set forth in California Government Code Section 22892. The employee may elect to contribute the entire value to his/her health care premium or allocate a portion of the value to other benefits offered under the Cafeteria Plan. If the employee elects to allocate part of the value to other benefits, any unpaid balance of the employee's health care premium shall be deducted from the employee's paycheck.

2. Except as modified in Section 5.D. of this Article, each part-time (regular, limited-term, or probationary) employee shall receive the dollar value of fifty percent (50%) of the employee's health plan premium or thirty-seven and five-tenths percent (37.5%) of the total health plan premium selected by the employee, whichever is greater, and that amount shall include the contribution towards the employee's Cafeteria Plan as set forth in California Government Code Section 22892, provided the employee's normal workweek consists of at least twenty (20) hours. Health care coverage and other benefits provided as part of the Cafeteria Plan shall be terminated for any employee whose normal workweek is reduced to less than twenty (20) hours. The employee may elect to contribute the entire value to his/her health care premium or allocate a portion of the value to other benefits offered under the Cafeteria Plan. If the employee elects to allocate part of the value to other benefits, any unpaid balance of the employee's health care premium shall be deducted from the employee's paycheck.

D. For employees who are on approved Family Leave, ~~pursuant to Part 2, Article V, Section 11. and applicable law,~~ the Authority shall continue to pay health insurance premiums as provided in Sections 5.C.1. and 5.C.2. of this Article to the extent required by applicable law.

E. Upon showing sufficient proof of alternate health care coverage, such as a certificate of coverage, a full-time or part-time (regular, limited-term or probationary) employee shall be entitled to a fifty-five (55) dollar biweekly credit to his/her Cafeteria Plan, in lieu of the amount provided in Sections 5.C.1. and 5.C.2. of this Article. This credit may be applied towards benefits offered under the Cafeteria Plan, including accidental death and dismemberment insurance or miscellaneous pay.

F. For 2016~~Effective December 4, 2014~~, the Director of Communications and the Human Resources Director shall receive a monthly ~~biweekly~~ cash allotment in the amount of one thousand six hundred fifty three dollars and fifty four cents ($1,653.54)~~seven hundred two dollars and forty seven cents ($702.47)~~ to be applied toward health care coverage and other benefits. The amount shall be adjusted ~~effective January 1, 2015, and~~ annually ~~thereafter, on a continuous basis~~ each January in the amount equal to the average percentage increase of CalPERS Health Plans for that year. The average percentage increase shall be computed by averaging the increase in CalPERS Health Plans in which the employees are eligible to participate, with the exclusion of the Plan with the highest premium. In addition to purchasing health care coverage, the Director of Communications and the Human Resources Director, at his/her option, may receive any or all remaining funds in cash or defer such funds to an Authority offered Deferred Compensation Plan.

Section 6. Range Adjustment

A. The bottom of the salary range for Assistant Chief shall be established at five and five-tenths percent (5.5%) above the maximum attainable Fire Division Chief salary. The top for this range shall be established at seven and five-tenths percent (7.5%) above the bottom. Maximum attainable salary is defined as the sum of the top of the salary range for Fire Division Chief plus any additional non-base salary building compensation provided to the majority of employees in this classification.

B. The top of the salary range for Human Resources Director and Director of Communications shall be established at seven and five-tenths percent (7.5%) above the maximum attainable salary within the OCFAMA classifications.

C. Movement within the salary ranges shall be based on job performance and shall be approved by the Fire Chief.

Section 7. Deferred Compensation

A. An employee in the classifications designated as Executive Management shall receive a biweekly deferred compensation contribution from the Authority in the amount equal to four and five-tenths percent (4.5%) of the employee's biweekly base salary. Such contribution shall go into the employee's designated account within the Authority's Deferred Compensation Plan.

Section 8. Authority Issued Vehicles and Cash in Lieu Allowance Policy

A. Intent of Policy

This policy has been developed to provide a consistent application of the Vehicle Allowance benefit that covers the issuance of an Authority vehicle or a cash allowance in lieu of an Authority issued vehicle.

B. Authority Issued Vehicle

1. Emergency/Code 3 Response Vehicles

Based on the duties performed by each member of the Executive Management group, the Fire Chief shall determine if an employee shall be required to maintain a twenty-four (24) hour emergency/Code 3 response vehicle. This determination shall be based on the specific requirement of the job and shall take all of the following conditions into consideration:

- The duties of the position require a twenty-four (24) hour seven (7) days a week emergency/Code 3 response status.
- The duties require that the vehicle be equipped with emergency/Code 3 response and communications equipment, i.e., emergency lights, siren, emergency radio, etc.
- The duties dictate the use of the vehicle in a manner that insurance coverage is not available on an individual basis, i.e., emergency response and wildland traversing.

Upon determination by the Fire Chief that the Executive Management member's duties require an Authority issued emergency/Code 3 equipped response vehicle, the Fire Chief shall assign such vehicle to the employee. The Fire Chief, at his/her discretion, may at any time determine that there is no need for such vehicle and revoke the use of the vehicle.

Emergency/Code 3 response vehicles shall be provided at the discretion of the Fire Chief and be in accordance with the following conditions:

- Those employees who shall be provided emergency/Code 3 response vehicles may use the vehicles for personal use, but shall be available on a twenty-four (24) hour seven (7) days a week emergency/Code 3 response status.
- The vehicles shall all conform to an established accessory standard.
- The vehicles shall be equipped with emergency/Code 3 equipment and shall be absent of visible organizational markings.
- The operation of the vehicles is limited to the employee and spouse when the employee is present in the vehicle.
- Authority provided vehicles shall not be taken out of the state without the approval of the Fire Chief
- Authority provided fuel for Authority issued vehicles shall be for business use only.

2. Non-emergency/Code 3 Response Vehicles

Should an Executive Management employee opt to receive an Authority issued vehicle, the issuance of the vehicle shall be in accordance with the

following conditions:

- Those employees provided vehicles may use the vehicles for personal use.
- The vehicles shall all conform to an established accessory standard.
- The vehicles shall be absent of visible organizational markings.
- The operation of the vehicles is limited to the employee and spouse when the employee is present in the vehicle.
- Authority provided vehicles shall not be taken out of the state without the approval of the Fire Chief.
- Authority provided fuel for Authority issued vehicles shall be for business use only.

3. Record Keeping

It is understood that if an employee is issued an Authority vehicle, the vehicle shall be used for business and personal use. In determining the cash value of the personal use of the vehicle, the method of "Annual Lease Value" shall be applied. Upon receipt of the appropriate information from the employee, the Finance Manager shall calculate the appropriate cash value for the vehicle's personal use. The cash value shall be identified on the individual's W-2 in Box 1 as taxable income. The cash value shall cover the cost of the vehicle and its maintenance and insurance.

C. Vehicle Cash Allowance

Those Executive Management employees who are not determined by the Fire Chief to be required to maintain a twenty-four (24) hour a day seven (7) days a week emergency/Code 3 response vehicle shall have the option of an Authority provided vehicle or shall receive a monthly cash allowance in the amount of five hundred (500) dollars for the use of their personal vehicle for Authority business. Such allowance shall be identified on their W-2 in Box 1, as taxable income. The Human Resources Director and Director of Communications are only eligible to receive the monthly cash allowance.

Employees who use their personal vehicle for business purposes shall comply with the following requirements:

- They shall maintain and provide proof of adequate levels of personal vehicle insurance coverage.
- They shall purchase their own fuel for the vehicle.
- They shall ensure that the vehicle is properly maintained.

Section 9. Retirement Formula – 3% at 50 (Safety Employees Hired before July 1, 2011)

A. The Authority shall continue the 3% at 50 retirement formula for ~~current~~

active Safety Member employees hired before July 1, 2011 for all years of service as specified under California Government Code Section 31664.1.

~~B. Effective January 2013 (Pay Period #4), the Authority will increase the deduction from the employee's Compensation Earnable to the amount equal to nine (9) percent to offset the cost to the Authority for this retirement benefit.~~

~~C. Effective the first day of the first full pay period in March, 2015, employees in Executive Management shall pay up to eleven percent (11%) but no higher than their maximum employee contribution (based on age of entry into OCERS) if their maximum employee contribution is lower than eleven percent (11%).~~

~~D.~~B. ~~Effective the first day of the first full pay period in March, 2016, e~~Employees in Executive Management shall pay up to thirteen and one half percent (13.5%) but no higher than their maximum employee contribution (based on age of entry into OCERS) if their maximum employee contribution is lower than thirteen and one half percent (13.5%).

~~E.~~C. Effective the first day of the first full pay period in March, 2017, employees in Executive Management shall pay their maximum employee contribution (based on age of entry into OCERS).

~~F. The Authority shall continue to pay one hundred (100) percent (100%) of the employee's remaining retirement contribution, pursuant to Government Code 31581.2 independent of the retirement formula benefit set forth herein the statutory maximum allowable by the Government Code.~~

~~G. Members' normal cost-of-living contributions shall be adjusted subsequent to and in accordance with actuarial recommendations adopted by the Board of Retirement and the Authority Board.~~

~~H.~~D. The employee deduction shall continue during the employee's employment period with the Authority or until such time that the employee qualifies under Government Code Section 31664.1(c). At any time beyond March 1, 2017, if there are increases to the maximum employee contribution to OCERS, employees will pay those employee contributions.

Section 10. Retirement Formula – 3% at 55 (Safety Employees Hired From July 1, 2011 Through December 31, 2012 or Employees Hired On of After January 1, 2013 With Reciprocal Retirement Benefits)

A. ~~Effective July 1, 2011, t~~The Authority shall continue~~implement~~ the 3% at 55 retirement formula for active safety employees who ~~became members of this group and who a~~were hired from July 1, 2011 through December 31, 2012 or hired on or after January 1, 2013 and establish reciprocity with the Orange County Employees Retirement System, for all years of service, as specified under California Government Code Section 31664.2. ~~Effective upon employment by the Authority, the Authority shall make a deduction from the employee's Compensation Earnable in the amount equal to nine (9) percent to offset the cost to the Authority for this retirement benefit.~~

~~B. Effective the first day of the first full pay period in March, 2015, employees in Executive Management shall pay up to eleven percent (11%) but no higher than their maximum employee contribution (based on age of entry into OCERS) if their maximum employee contribution is lower than eleven percent (11%).~~

~~C.~~B. ~~Effective the first day of the first full pay period in March, 2016, e~~Employees in Executive Management shall pay up to thirteen and one half percent (13.5%) but no higher than their maximum employee contribution (based on age of entry into OCERS) if their maximum employee contribution is lower than thirteen and one half percent (13.5%).

~~D.~~C. Effective the first day of the first full pay period in March, 2017, employees in Executive Management shall pay ~~fifty percent (50%) of the normal retirement cost toward the employee's retirement contribution but no higher than~~ their maximum employee contribution (based on age of entry into OCERS).

~~E. The Authority shall continue to pay one hundred (100) percent of the employee's remaining retirement contribution, pursuant to Government Code 31581.2 independent of the retirement formula benefit set forth herein the statutory maximum allowable by the Government Code.~~

~~F. Members' normal cost of living contributions shall be adjusted subsequent to and in accordance with actuarial recommendations adopted by the Board of Retirement and the Authority Board.~~

~~G.~~D. At any time beyond March 1, 2017, if there are increases to the maximum employee contribution to OCERS, employees will pay those employee contributions. This deduction shall continue during the employee's employment period with the Authority and may increase at such time that the Government Code requires the employee to contribute a greater amount, or until such time that the employee qualifies under GC 31664.1(c).

Section 11. Retirement Formula – 2.7% at 57 (Safety Employees Hired On or After January 1, 2013 With No Reciprocal Retirement Benefits)

A. ~~Effective January 1, 2013, t~~The Authority shall continue ~~implement~~ the 2.7% at ~~age~~ 57 retirement formula for active safety employees who ~~became members of this group and a~~were hired on or after January 1, 2013 who do not establish reciprocity with the Orange County Employees Retirement System, for all years of service, as specified under California Government Code Section 7522.25(d). Effective upon employment by the Authority, the Authority shall make a deduction from the employee's Compensation Earnable in the amount equal to 50% of the normal retirement cost toward the employee's retirement contribution. This deduction shall continue during the employee's employment period with the Authority and may increase at such time that the Government Code requires the employee to contribute a greater amount.

Section 12. Retirement Formula – 2.7% at 55 (Non-Safety Employees Hired Prior to December 1, 2012)

A. The Authority shall continue the 2.7% at 55 retirement formula ~~under the General Members category of the Orange County Employees Retirement System~~ for ~~current~~ active non-safety employees who were ~~in this group~~ hired ~~by the Authority~~ prior to December 1, 2012. ~~Implementation of this retirement formula shall be in accordance with the following requirements:~~

~~1. The employees will continue to assume the total cost of the benefit, which includes the Employer's Contribution Rate and Employee's Contribution Rate, calculated to a total of six (6) percent of the employee's Compensation Earnable. The Authority shall make a deduction from the employee's Compensation Earnable to offset the cost to the Authority for this retirement benefit.~~

~~2. No employee shall receive a lesser final retirement calculation with 2.7% at age 55 retirement formula than what he/she would have received with the prior formula.~~

~~3. Effective January 2013 (Pay Period #4), the Authority will increase the deduction to nine (9) percent of the employee's Compensation Earnable to offset the retirement cost to the Authority for this retirement benefit.~~

~~4. Effective the first day of the first full pay period in March, 2015, employees in Executive Management shall pay up to eleven percent (11%) but no higher than their maximum employee contribution (based on age of entry into OCERS) if their maximum employee contribution is lower than eleven percent (11%).~~

B. ~~Effective the first day of the first full pay period in March, 2016, e~~Employees in Executive Management shall pay up to thirteen and one half percent (13.5%) but no higher than their maximum employee contribution (based on age of entry into OCERS) if their maximum employee contribution is lower than thirteen and one half percent (13.5%).

C. Effective the first day of the first full pay period in March, 2017, employees in Executive Management shall pay ~~fifty percent (50%) of the normal retirement cost toward the employee's retirement contribution but no higher than~~ their maximum employee contribution (based on age of entry into OCERS).

D. At any time beyond March 1, 2017, if there are increases to the maximum employee contribution to OCERS, employees will pay those employee contributions. The deduction shall continue during the employee's employment period with the Authority and may increase at such time that the Government Code requires the employee to contribute a greater amount.

~~E. The Authority shall continue to pay one hundred (100) percent of the employee's remaining retirement contribution, pursuant to Government Code~~

31581.2 independent of the retirement formula benefit set forth herein the statutory maximum allowable by the Government Code.

F.E. Members' normal cost-of-living contributions shall be adjusted subsequent to and in accordance with actuarial recommendations adopted by the Board of Retirement and the Authority Board.

Section 13. Retirement Formula – 2% at 55 (Non-Safety Employees Hired From December 1, 2012 Through December 31, 2012 or Employees Hired On or After January 1, 2013 With Reciprocal Retirement Benefits)

A. Effective December 1, 2012, tThe Authority shall continue implement the 2% at age 55 retirement formula for active non-safety employees who became members of this group and awere hired from December 1, 2012 through December 31, 2012 or hired on or after January 1, 2013 and have established reciprocity with the Orange County Employees Retirement System, for all years of service, as specified under California Government Code Section 31676.12. Effective upon employment by the Authority, the Authority shall make a deduction from the employee's Compensation Earnable in the amount equal to nine (9) percent to offset the cost to the Authority for this retirement benefit.

B. Effective the first day of the first full pay period in March, 2015, employees in Executive Management shall pay up to eleven percent (11%) but no higher than their maximum employee contribution (based on age of entry into OCERS) if their maximum employee contribution is lower than eleven percent (11%).

C.B. Effective the first day of the first full pay period in March, 2016, eEmployees in Executive Management shall pay up to thirteen and one half percent (13.5%) but no higher than their maximum employee contribution (based on age of entry into OCERS) if their maximum employee contribution is lower than thirteen and one half percent (13.5%).

D.C. Effective the first day of the first full pay period in March, 2017, employees in Executive Management shall pay fifty percent (50%) of the normal retirement cost toward the employee's retirement contribution but no higher than their maximum employee contribution (based on age of entry into OCERS).

E. The Authority shall continue to pay one hundred (100) percent of the employee's remaining retirement contribution, pursuant to Government Code 31581.2 independent of the retirement formula benefit set forth herein the statutory maximum allowable by the Government Code.

F. Members' normal cost-of-living contributions shall be adjusted subsequent to and in accordance with actuarial recommendations adopted by the Board of Retirement and the Authority Board.

G.D. At any time beyond March 1, 2017, if there are increases to the maximum employee contribution to OCERS, employees will pay those employee contributions. This deduction shall continue during the employee's employment period with the Authority and may increase at such time that the

Government Code requires the employee to contribute a greater amount~~, or until such time that the employee qualifies under GC 31664.1(c)~~.

Section 14. Retirement Formula – 2.5% at 67 (Non-Safety Employees Hired On or After January 1, 2013 With No Reciprocal Retirement Benefits)

A. ~~Effective January 1, 2013, t~~The Authority shall continue ~~implement~~ the 2.5% at ~~age~~ 67 retirement formula for active non-safety employees who ~~became members of this group and a~~were hired on or after January 1, 2013 and do not establish reciprocity with the Orange County Employees Retirement System, for all years of service, as specified under California Government Code Section 7522.20. Effective upon employment by the Authority, the Authority shall make a deduction from the employee's Compensation Earnable in the amount equal to 50% of the normal retirement cost toward the employee's retirement contribution. This deduction shall continue during the employee's employment period and may increase at such time that the Government Code requires the employee to contribute a greater amount.

Section 15. Retiree Medical Insurance Grant

A. All provisions that apply to Administrative Management shall also apply to Executive Management.

PART 4
IMPLEMENTATION

Unless otherwise indicated, all provisions of this Personnel and Salary Resolution shall be effective June 27, 2002.

APPENDIX A

EXECUTIVE MANAGEMENT CLASSIFICATIONS

Fire Chief
~~Deputy Fire Chief~~
Assistant Chief – Business Services
Assistant Chief/Fire Marshal – Community Risk Reduction
Assistant Chief – Operations
Assistant Chief – Organizational Planning
Assistant Chief – Support Services
Human Resources Director
Director of Communications

APPENDIX B

ADMINISTRATIVE MANAGEMENT CLASSIFICATIONS

0570 Accounting Manager
1810 Assistant Clerk of the Authority
1374 Assistant Information Technology Mgr - Customer Relations & Consulting
1371 Assistant Information Technology Mgr - GIS & Data Management
1373 Assistant Information Technology Mgr - Infrastructure & Workplace Support
1372 Assistant Information Technology Mgr - Portfolio & Procurement
1710 Assistant Treasurer
0750 Benefit Services Manager
1820 Clerk of the Authority
0440 Construction Manager
0190 Deputy Fire Marshal
0765 Employee Relations Manager
1530 EMS Coordinator
0430 Facilities Maintenance Manager
0590 Finance Manager
0280 Fleet Services Manager
1370 Information Technology Manager
1630 Legislative Analyst
1620 Management Analyst
1540 Medical Director
0760 Organizational and Development Training Program Manager
0560 Payroll/Accounts Payable Manager
0450 Property Manager
0330 Purchasing and Materials Manager
0860 Risk Management Analyst
0870 Risk Management Safety Officer
0880 Risk Manager
0550 Senior Accountant
0740 Senior Human Resources Analyst
1720 Treasurer

Orange County Fire Authority

AGENDA STAFF REPORT

Board of Directors Meeting
November 17, 2016

Agenda Item No. 5B
Discussion Calendar

2016 Long Term Liability Study & Expedited Pension Payment Plan

Contact(s) for Further Information

Lori Zeller, Assistant Chief Business Services Department	lorizeller@ocfa.org	714.573.6020
Tricia Jakubiak, Treasurer (Presenter) Treasury & Financial Planning	triciajakubiak@ocfa.org	714.573.6301

Summary

This annual agenda item is submitted to provide information on the Orange County Fire Authority's (OCFA) long term liabilities and strategies for mitigating and funding the liabilities.

Prior Board/Committee Action

Budget and Finance Committee Recommendation: *APPROVE*

At its regular November 9, 2016, meeting, the Budget and Finance Committee reviewed this item and directed staff to modify the recommendations to include: (1) alter the funding target for the Pension Payment Plan from 100% to 85%; (2) after achieving the 85% target, redirect expedited payment dollars to the unfunded Retiree Medical liability; and (3) obtain an actuarial calculation of interest savings achieved by expediting payment of OCFA's pension liability. With these modifications, the Committee unanimously recommended approval of this item.

RECOMMENDED ACTION(S)

1. Direct staff to continue the Expedited Pension Payment Plan as indicated in the Updated Snowball Strategy, with a modification to alter the funding target from 100% to 85%, and redirect expedited payment dollars to Retiree Medical after achieving the 85% target.
2. Direct staff to return to the Board of Directors in January with the mid-year financial review, to consider allocation of the $9.8 million of available unencumbered funds identified in the FY 2015/16 financial audit to OCFA's unfunded pension liability.
3. Direct staff to continue seeking cost-saving options related to Workers' Compensation.
4. Direct staff to obtain an actuarial calculation (for the 2017 Long Term Liability Study) of interest savings achieved by expediting payment of OCFA's pension liability.

Impact to Cities/County

Strategic planning to reduce liabilities where possible and provide early funding for those liabilities which cannot be reduced will assist OCFA in sustaining frontline emergency services for our member agencies and the citizens we serve.

Fiscal Impact

The Adopted Budget for FY 2016/17 and the five-year financial forecast include a $3.6 million payment for the Expedited Pension Payment Plan. The accelerated payments proposed herein are recommended in a manner which phases-in the impact to cash contract city charges slowly over time. Continuous pursuit of the recommended actions will lower OCFA's salary and benefit costs over the long term, ultimately reducing OCFA's expenditure budget and positively impacting our annual charges to cash contract cities.

Background

In order to determine an agency's financial stability, one must look at all of its long term obligations or liabilities, not just pensions. The Liability Study (Attachment 1) examines all of OCFA's long-term liabilities, with primary focus on pension liability.

Unfunded Pension Liability – Funding Study vs. CAFR

It should be noted that the November Board agenda packet contains two separate staff reports that both contain data relating to OCFA's pension liability; one report (Agenda Item No. 5B) is for the Annual Long Term Liability Study, and the other report (Agenda Item No. 5C) is for the Comprehensive Annual Financial Report (CAFR). These two reports provide two different numbers for the OCFA's pension liability. The technical description for why these two numbers are different is provided in Agenda Item No. 5C. A very simplified description, for ease of understanding, is provided below.

The unfunded pension liability number, as reported in this Annual Long Term Liability Study, is $419.0 million. The unfunded pension liability number, as reported in the CAFR, is $517.7 million. Very simply stated, the majority of the difference is caused by how investment earnings are recognized. During calendar year 2015, the pension system only earned 0.10%; however, actuarial assumptions were that the system would earn 7.25%. The loss of earnings, as compared to the assumption, was recognized immediately for the CAFR (thus a larger liability); however, that same loss of earnings for the Liability Study will be spread over the next five years.

Expedited Pension Payment Plan

In 2015, OCFA requested OCERS' actuary, Segal Consulting, to estimate the impact on the amortization period for OCFA's Unfunded Actuarially Accrued Liability (UAAL) based on an updated accelerated funding plan, which included the following:

1. Contributing an additional $12,609,380 from FY 2014/15 unencumbered fund balance with an additional $3 million each year thereafter
2. Contributing additional funds each year using projected savings that will be realized under new Public Employees' Pension Reform Act (PEPRA) starting at $2,802,122 in 2015/16 and continuing in different amounts until payment is complete
3. Contributing an additional $1 million each year starting in 2016/17 and increasing by $2 million each year until it reaches $15 million and continuing at $15 million thereafter until payment is complete
4. Contributing $1 million per year from surplus fund balance available in the Workers' Compensation Self Insurance Fund starting in 2016/17 for 5 years

Segal reported that the strategies were estimated to reduce OCFA's amortization period significantly, with payoff anticipated by FY 2026/27. The expedited strategies result in a "snowball" effect with growing annual values that add up to a cumulative $254.5 million over the accelerated payment timeline, resulting in 100% funding of the UAAL. Some members of the OCFA Board previously discussed lowering the funding target to 80%; however, that dialogue was placed on hold until the November 2016 meeting of the Budget and Finance Committee, when the Committee formally recommended reducing the target to 85%.

The OCFA has taken many steps to reduce and fund its liabilities, and staff will continue seeking additional steps, while ensuring the long term viability of the organization.

Attachment(s)

1. 2016 Long Term Liability Study
2. Updated Snowball Strategy

ORANGE COUNTY FIRE AUTHORITY

2016

LIABILITY STUDY

OCFA'S LONG TERM LIABILITES

NOVEMBER 2016

OCFA'S LONG TERM LIABILITY STUDY

I. OBJECTIVE

One of the key components of fiscal responsibility is prudent management of long-term liabilities. The objective of this annual study is to provide an accurate assessment of the OCFA's ***total*** long-term obligations and continuously identify strategies to reduce and/or fund the liabilities.

II. BACKGROUND

OCFA's long term liabilities include:

1. Defined Benefit Pension Plan
2. Defined Benefit Retiree Medical Plan
3. Lease Purchase Agreements (helicopters)
4. Workers Compensation Claims
5. Accrued Compensated Absences (accumulated sick and vacation payouts)

OCFA's biggest long-term challenges are pensions, retiree medical for retired employees, and workers' compensation claims. Both the Defined Benefit Pension Plan and the Defined Benefit Retiree Medical Plan currently have unfunded liability balances, as further described below.

DEFINED BENEFIT PENSION PLAN

In a *defined benefit plan,* employees receive *specific benefits* upon retirement, based on a pre-established formula. For example, a pension plan may provide retirees an annual retirement income which is determined in accordance with an agreed-upon formula, such as a predetermined percentage of annual earnings multiplied by the number of years of service.

The OCFA participates in the Orange County Employees' Retirement System (OCERS), a cost sharing multiple-employer, defined benefit pension plan. All OCFA regular, full-time and part-time employees become members of OCERS upon employment, and the OCFA makes periodic contributions to OCERS as part of the funding process. The contributions submitted to OCERS are divided into employer and employee contributions. The combination of these contributions and investment income from OCERS' investments are structured to fund the employees' retirement benefits by the time the employees retire.

The OCFA's employees are distributed into two employee categories for purposes of retirement benefits, identified as Safety members and General members. Both the Safety and General categories include three tiers of retirement benefit formulas each, depending on date of hire:

	Hired Prior to July 1, 2012	**Hired Between July 1, 2012 – Dec. 31, 2012**	**Hired on or after Jan. 1, 2013 (w/out reciprocity)**
Safety	3% @ 50	3% @ 55	2.7% @ 57

	Hired Prior to July 1, 2011	**Hired Between July 1, 2011 – Dec. 31, 2012**	**Hired on or after Jan. 1, 2013 (w/out reciprocity)**
General	2.7% @ 55	2% @ 55	2.5% @ 67

OCFA Retirement Costs, Liabilities and Funding

OCFA's annual retirement costs (mandatory costs plus voluntary accelerated payments) represent approximately $74 million or 23% of the Authority's FY 2016/17 General Fund budget. Each year, the Authority receives its retirement rates from OCERS. The total retirement rate has two components: the Normal Cost Component plus the current year's cost for the Unfunded Actuarial Accrued Liability (UAAL). The Normal Cost Component is the cost to pay for the current year's value of retirement benefits as earned. The UAAL Component is the accrued liability for past services which were not funded by prior contributions and investments.

The UAAL is determined by the actuary and is the difference between the present value of accrued liabilities and the value of assets as of a specific date. This amount changes over time as a result of changes in accrued benefits, pay levels, rates of return on investments, changes in actuarial assumptions, and changes in the demographics of the employee base.

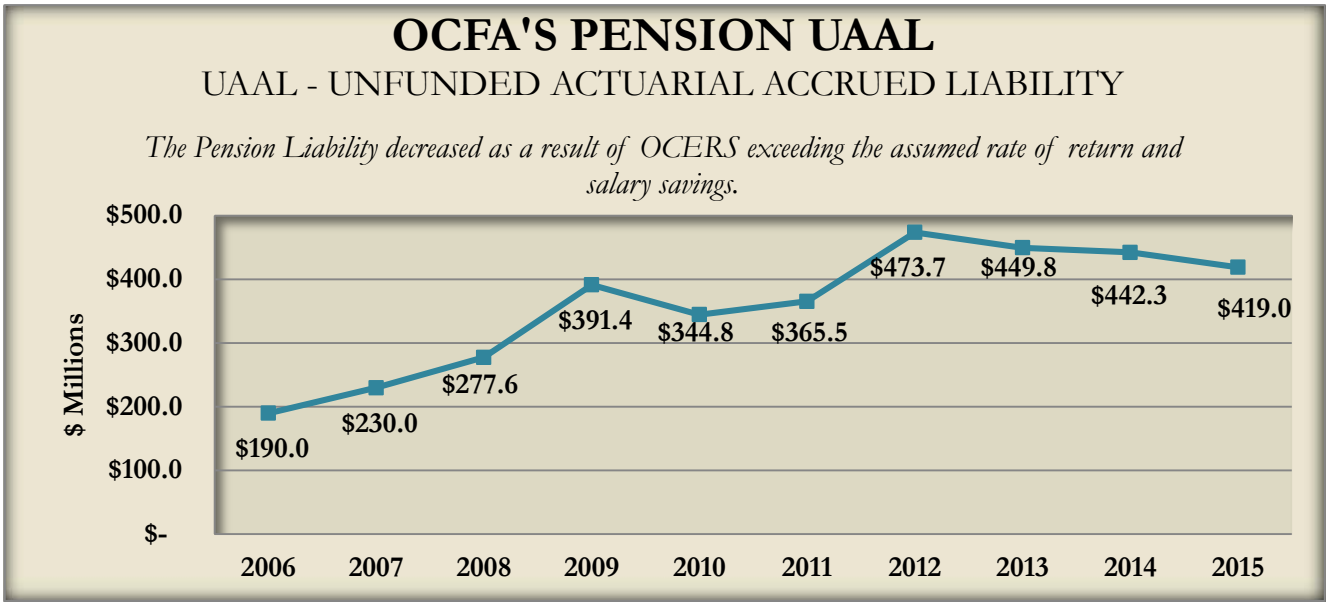

Based on the December 31, 2015, valuation by OCERS, the Authority's total UAAL was $419.0 million with $356.8 million or 85% attributed to Safety members and $62.2 million or 15% attributed to General members. The Safety member plans are currently 75% funded, and the General member plans are 68% funded. The OCFA reduces its UAAL over time as part of the annual required pension contribution to OCERS as shown below:

General Members (2.7% @ 55, 2.0% @ 55, and 2.5% @ 67 combined)

*Employer Rate **	**2015 Valuation**	**2014 Valuation**
Normal Cost	12.51%	12.69%
UAAL	20.53%	20.28%
Total	33.04%	32.97%

Safety Members (3.0% at 50, 3% @ 55 and 2.7% @ 57 combined)

*Employer Rate **	**2015 Valuation**	**2014 Valuation**
Normal Cost	25.98%	26.47%
UAAL	22.40%	24.42%
Total	48.38%	50.89%

* Totals do not include *Employee Rates*, which vary based on age of entry and retirement formula. *Employee Rates* range from 4.77% - 15.98% for General and 4.54% - 14.03% for Safety (See Exhibit A). Rates are also after adjustment for additional UAAL contributions made in 2014 and 2015.

Two events have the greatest impact on plan funding: (1) plan changes, namely benefit formula changes and (2) differing actual experience requiring a modification in assumptions to reflect reality such as life expectancy. Other assumptions that impact the funding and UAAL include:

1. The assumed rate of return
2. The rate of increase in salaries
3. Member mortality
4. The age at which members choose to retire
5. How many members become disabled
6. How many members terminate their service earlier than anticipated

The assumed rate of return, also known as the discount rate, is a critical issue impacting OCFA's UAAL. The higher the discount rate, the lower the present value of pension assets needed to meet future pension obligations. A lower discount rate increases the current unfunded pension liabilities. In 2013, the OCERS Board voted to lower the interest rate assumption from 7.75% to 7.25% which increased OCFA's annual retirement costs by $7.5 million. This increase was phased in over a two-year period starting in FY 2014/15.

In 2015, OCERS actual return was 0.10%, significantly below its assumed rate of return of 7.25%. This would typically result in a noticeable increase in the UAAL. However, this year OCFA paid $15.4 million in additional contributions which, along with salary savings, lowered OCFA's UAAL by $23.3 million from $442.3 million in 2014 to $419.0 million in 2015. Of the $23.3 million decline in the UAAL, Safety's UAAL decreased by $23.6 million and General's UAAL increased slightly by $300,000 for a net decrease of $23.3 million.

The following chart shows a history of OCERS' investment performance over the past fifteen years. Although there have been years in which OCERS exceeded its assumed rate of return, the years in which OCERS incurred significant losses, such as the 21% loss in 2008, have a dramatic negative impact. OCERS' average return for the 15 years reflected below is 6.29%, which is below its assumed rate of return of 7.25%. When OCERS' actual return falls below its assumed rate of return, OCFA incurs higher retirement rates/costs.

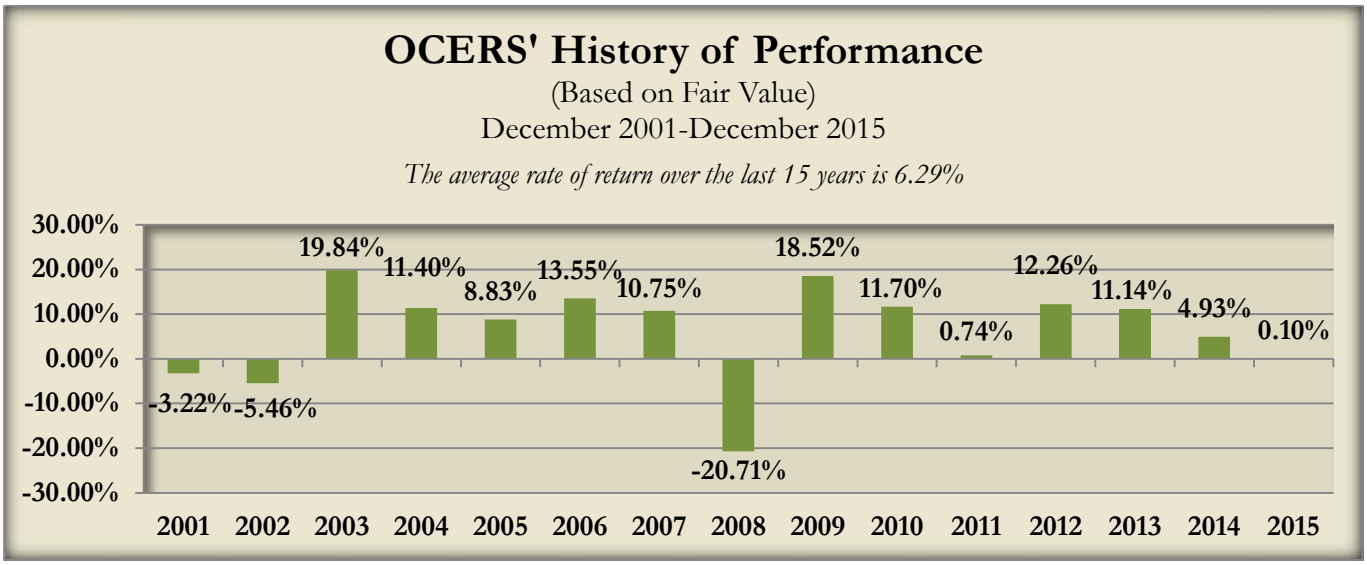

OCERS' investment return also impacts the funding level of the entire system, as demonstrated in the following chart. After the 21% loss in 2008, OCERS UAAL increased and its funding level began to drop. The funding level improved in 2013 when OCERS rate of return exceeded the assumed rate of return.

OCERS' Schedule of Funding Progress

(Dollars in Thousands)

OCERS' funding level has improved recently

Actuarial Valuation Date December 31	Actuarial Value of Plan Assets (a)	Actuarial Accrued Liability (b)	Total UAAL (b-a=c)	Funded Ratio (a/b)
2001	$4,586,844	$4,843,899	$257,055	94.69%
2002	4,695,675	5,673,754	978,079	82.76%
2003	4,790,099	6,099,433	1,309,334	78.53%
2004	5,245,821	7,403,972	2,158,151	70.85%
2005	5,786,617	8,089,627	2,303,010	71.53%
2006	6,466,085	8,765,045	2,298,960	73.77%
2007	7,288,900	9,838,686	2,549,786	74.08%
2008	7,748,380	10,860,715	3,112,335	71.34%
2009	8,154,687	11,858,578	3,703,891	68.77%
2010	8,672,592	12,425,873	3,753,281	69.79%
2011	9,064,355	13,522,978	4,458,623	67.03%
2012	9,469,208	15,144,888	5,675,680	62.52%
2013	10,417,125	15,785,042	5,367,917	65.99%
2014	11,449,911	16,413,124	4,963,213	69.76%
2015	12,228,009	17,050,357	4,822,348	71.72%

The chart below assumes OCERS will earn its assumed rate of return of 7.25% in 2015 and future years. This chart should be contrasted with the chart on the following page to demonstrate the significant impact on retirement contribution rates, when OCERS does not earn its assumed rate of return.

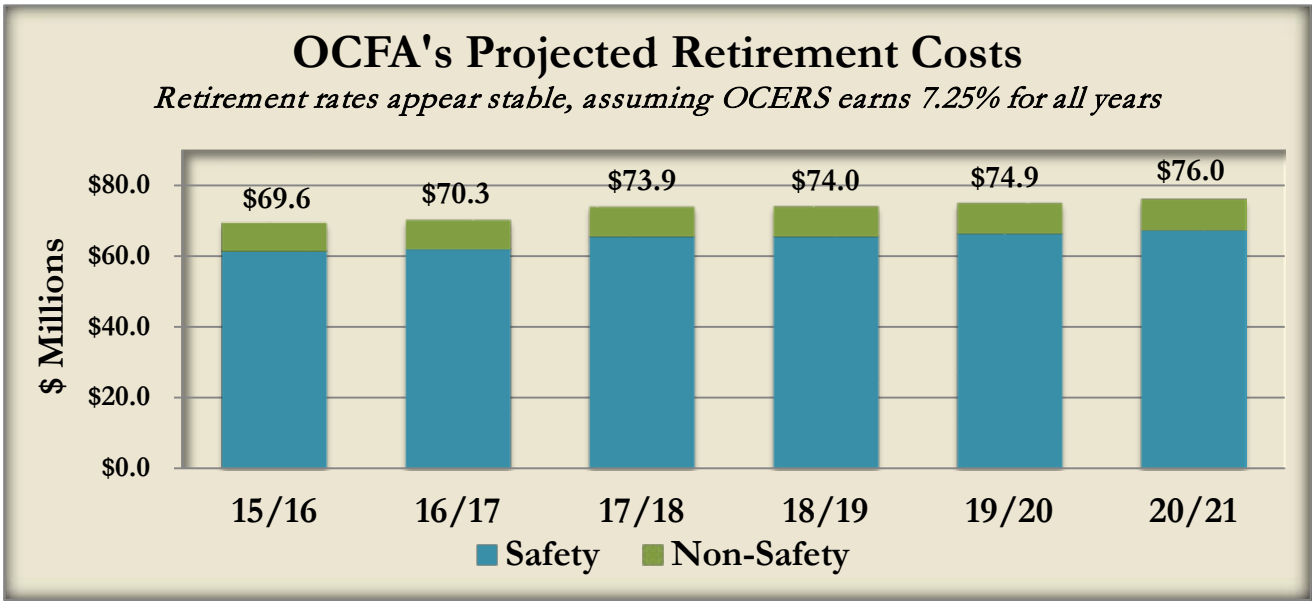

The chart below assumes OCERS will not earn its assumed rate of return, and instead will earn 0.00% in 2016 and 7.25% in future years. OCERS' year-to-date 2016 return as of August is 6.2%. Note the increased retirement contributions starting in FY 18/19.

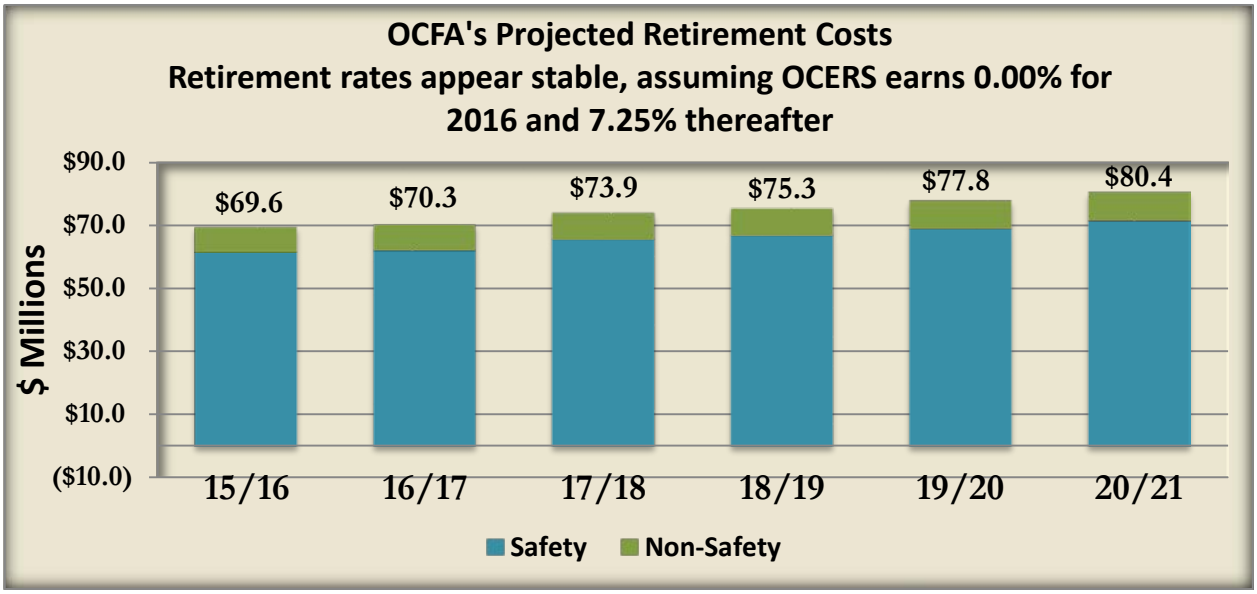

The analysis of long-term obligations, including pensions, is an important part of credit rating agencies' review of local governments. A number of these agencies have been downgraded due in part to pension funding issues.

OCFA has taken steps to increase employee contributions, reduce benefits by establishing new tiers, and accelerate the paydown of the UAAL with the long-term goal to ensure adequate pension funding. However, other factors (such as OCERS' investment performance) are beyond the OCFA's control, yet these factors have a significant impact on determining retirement rates, and ensuring adequate funding.

Expedited Pension UAAL Payment Plan

In September 2013, the OCFA Board of Directors approved an Expedited Pension UAAL Payment Plan. The expedited plan will have the following benefits:

- Results in OCFA's pension liability being paid off sooner
- Earlier and larger contributions into the pension system result in greater investment income earned
- Greater investment income earned results in less money paid by the employer over the long term

OCFA's expedited payment plan originally involved three components including (1) use of year-end fund balance available, (2) contributing additional funds each year using savings achieved under PEPRA or other annual actuarial gains, and (3) contributing an additional $1 million per year in budgeted funds, with the annual budget allocation building to $5 million per year by year 5.

In FY15/16, the plan was modified to include the following:

1. Contributing an additional $1 million each year starting in 2016/17 and increasing by $2 million each year until it reaches $15 million and continuing at $15 million thereafter
2. Contributing $1 million per year from surplus fund balance available in the Workers' Compensation Self Insurance Fund starting in 2016/17 for 5 years

The outcomes from the expedited payment plan implementation in FY 2013/14 and 2014/15 along with OCFA's anticipated future year expedited payments were submitted to OCERS' actuary for determination of how long it would take OCFA to achieve full payment of the UAAL. ***In 2015, the actuary reported back that the expedited payment plan would achieve full payment of OCFA's UAAL by FY 2026/27, assuming all other actuarial inputs are held constant.***

Additional Payments Made to-date to Lower UAAL

FY 13/14 $5.5 million
FY 14/15 $21.3 million
FY 15/16 $15.4 million

All of the above strategies will reduce the OCFA's existing UAAL more rapidly, and effectively shorten the weighted-average amortization period. Shortening the amortization period will have many benefits to OCFA. Although it causes our employer contributions to rise during the expedited payment period, it results in our liability being paid off sooner. Earlier payments of contributions will result in greater investment income earned and less money paid from the employer over the long-term.

Staff evaluated the affordability of these expedited payment options, using the OCFA's long term financial forecast. We concluded that combining multiple strategies yields positive benefits for OCFA, while also retaining flexibility in the event that OCFA's financial environment should change significantly in the coming years.

DEFINED *BENEFIT* RETIREE MEDICAL PLAN

In addition to the OCFA's retirement plan administered by OCERS, the OCFA provides a post-employment medical retirement plan (Retiree Medical Plan) for certain employees. Employees hired prior to January 1, 2007, are in a *defined benefit plan* that provides a monthly grant toward the cost of retirees' health insurance coverage based on years of service. The Plan's assets are held in an irrevocable trust for the exclusive benefit of Plan participants and are invested by OCERS. As such, if OCERS does not earn its assumed rate of return of 7.25%, the UAAL increases. Current active employees hired prior to January 1, 2007, are required to contribute 4% of their gross pay toward the Retiree Medical Plan.

Based on an actuarial study prepared by Nyhart Epler as of July 1, 2016, the OCFA's Unfunded Actuarial Accrued Liability (UAAL) for the Retiree Medical defined benefit plan is $98.6 million. The UAAL is impacted by future retirees, spouses of retirees, a maximum 5% annual increase in the medical grant, the investment return of the trust, and the underlying assumptions such as the mortality tables.

Under the Government Accounting Standards Board (GASB) Statement No. 45, OCFA is required to have an actuarial valuation performed on its Retiree Medical Plan every two years.

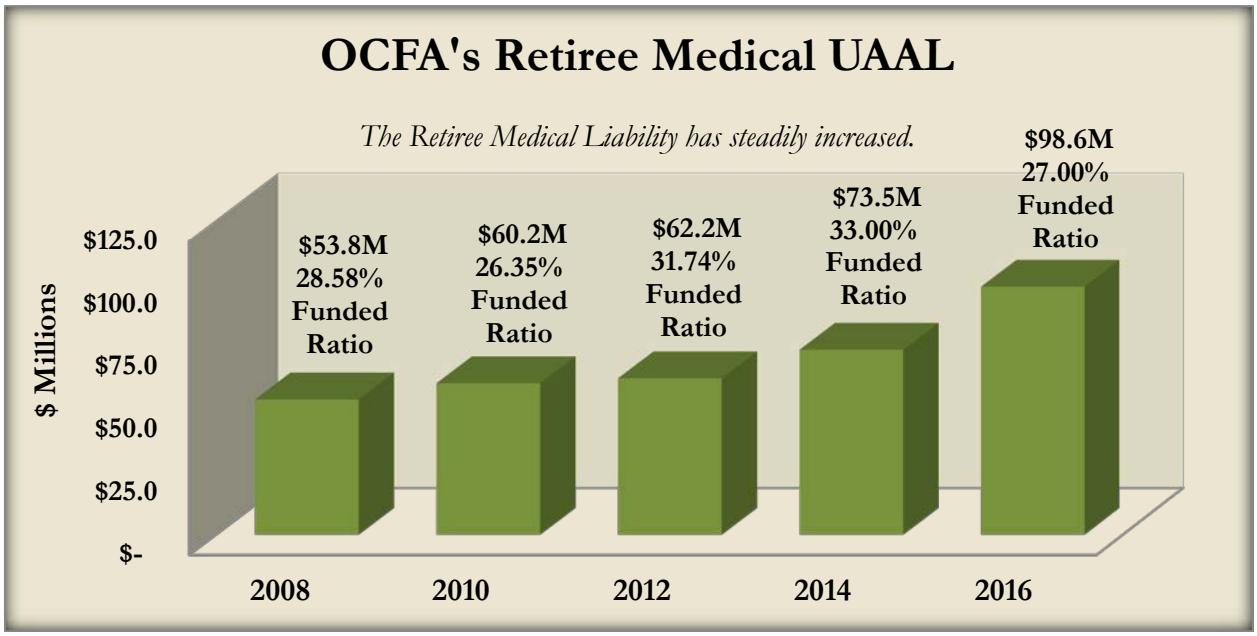

Note: Does not include implicit subsidy and uses OCERS assumed rate of return of 7.75% up to 2012 and 7.25% thereafter.

The benefit provided under the OCFA's Retiree Medical Plan is a negotiated benefit included in the various Memorandums of Understanding and the Personnel & Salary Resolution for employees hired prior to January 1, 2007.

The OCFA has previously approached funding issues and plan sustainability issues relating to this Plan collaboratively with its labor groups in order to identify options for improving the funding status. Similar to previous approaches, following receipt of the 2012 Actuarial Study for this Plan, management met with representatives of all three labor groups to review the findings. In 2013, we gathered ideas from labor for options that may be considered in the future to improve the funding status of the Plan and had the actuary perform a special actuarial study to evaluate the various options and associated impacts on plan funding. The results of the special study were shared with each of the labor groups. Periodic discussions on this topic continue with management and labor seeking options for future funding of the plan.

DEFINED *CONTRIBUTION* RETIREE MEDICAL PLAN

For employees hired on or after January 1, 2007, the OCFA created a *defined contribution plan* that is administered by SelectAccount. The Plan provides for the reimbursement of medical, dental, and other healthcare expenses of retirees. Employees are required to contribute 4% of their gross pay. Account assets are invested as directed by the participant and all contributions, investment income, realized gains and losses are credited to the individual's account. Under this plan structure, there is no UAAL.

LEASE PURCHASE AGREEMENTS

A Lease Purchase Agreement is a form of long-term debt used by government agencies to acquire buildings, vehicles, equipment and other capital assets. Within this type of lease, a lessee can apply lease payments annually toward the purchase of the property. In December 2008, the OCFA entered into a ten-year Lease Purchase Agreement to purchase two helicopters and related equipment for a purchase price of

$21.5 million. In 2011, OCFA refinanced the helicopters and lowered its interest rate from 3.76% to 2.58% saving $444,000 over the remaining six years of the lease. As of June 30, 2016, $6.3 million remains due, including interest and principal. The final maturity is in 2018.

During the FY 2014/15 budget development process, staff analyzed the feasibility of paying off the outstanding helicopter lease. Staff concluded that the early payoff of the obligation would have detrimental impacts on Fund 133: Vehicle Replacement Fund. The Fund would go negative within two years of paying off the lease which means there would be no funding available to purchase needed fire apparatus; therefore, staff is no longer pursuing early payoff of the lease agreement.

WORKERS' COMPENSATION CLAIMS

In March 2002, OCFA implemented a workers' compensation self-insurance program. A separate fund called Fund 190: Self Insurance was established in May 2003 to track funding and expenditures for workers' compensation claims liability. The funding sources include revenue from the General Fund and interest earnings. The required funding levels are determined by an independent actuarial study. As of June 30, 2016, OCFA's total workers' compensation liability is $61.2 million. Although the workers' compensation program represents a large liability for OCFA, it is important to note that it is a ***fully-funded*** liability. OCFA has $73.7 million set-aside in reserves to pay this liability as the various medical claims and bills become due, reflecting a funding surplus of $12.5 million.

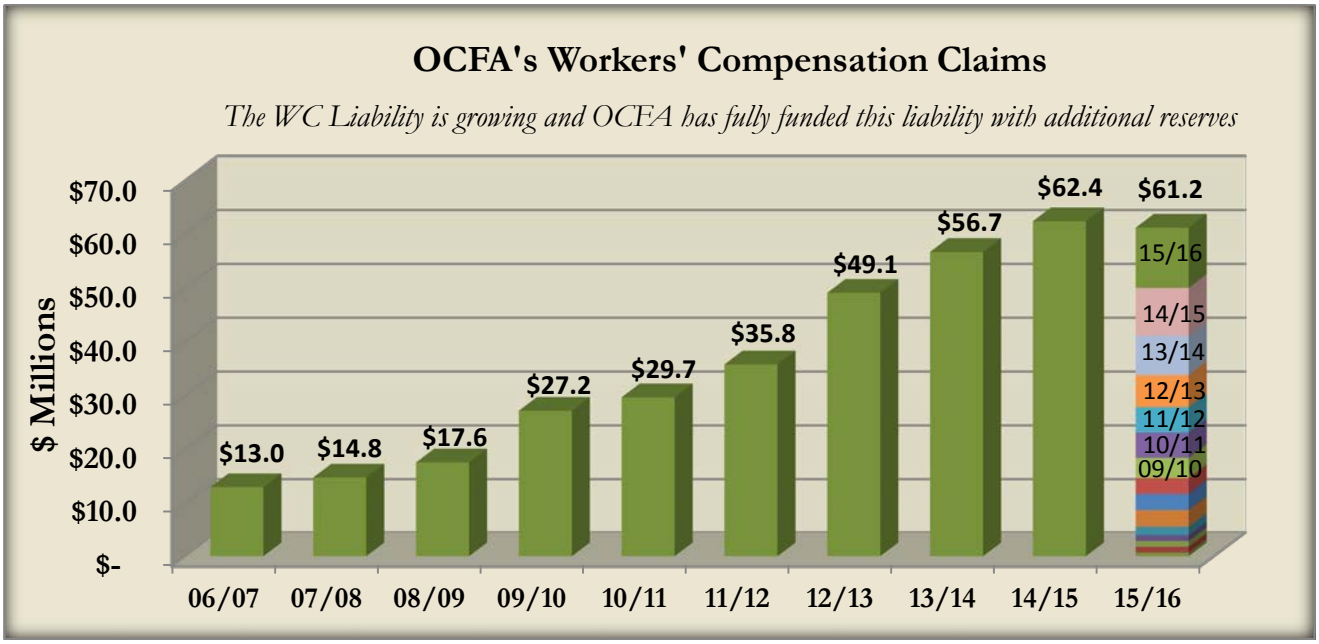

The outstanding liability reflected in the above chart reflects the fact that although the entire future cost of claims are recorded in the year of injury, the actual payment of that claim does not occur immediately. The cash flow payments for many workers' compensation cases occur slowly over time; therefore, it is a natural occurrence that the unpaid liability for a self-insured system will grow as the unpaid liabilities stack on top of each other over the years (as demonstrated by the color-coding of the FY 15/16 bar in the above chart). Upon maturity of a self-insured system, the amount of unpaid liability should level out (as demonstrated in the above chart in the most recent years), and continued increases at that point in time are more likely driven by other forces, such as increased medical costs, increased claim activity, legislative changes and case law.

The workers' compensation liability reflects the present value of estimated outstanding losses at the 50% confidence level. A confidence level is the statistical certainty that an actuary believes funding will be sufficient. For example, a 50% confidence level means that the actuary believes funding will be sufficient in five out of ten years. The Workers' Compensation Funding Policy that was adopted by the Board in 2010 had set the funding level at 50% for outstanding losses and 60% for projected losses. However, in FY 2015/16, the Board approved lowering the confidence level for projected losses from 60% to 50%. Actual workers' compensation expenditures have remained well below the actuary's estimates for several years. The reduced confidence level should align the annual funding more closely with actual workers' compensation experience.

There are several factors that contribute to the liability including workers' compensation reform that increased the statute of limitation for cancer from five to ten years; injury presumption for safety personnel; an aging workforce which contributes to a longer recovery time and higher permanent disability benefits; increased medical costs; and an increase to the workforce in 2012 with the addition of the City of Santa Ana. Santa Ana reimburses OCFA for injuries that initially occurred on or before April 20, 2012.

ACCRUED COMPENSATED ABSENCES

Compensated absences are commonly described as paid time off made available to employees in connection with sick and vacation time. If employees do not use all of such compensated absences, a liability is accrued for the unused portion. The OCFA's policy allows employees to accumulate earned but unused sick and vacation pay benefits.

OCFA's labor agreements allow employees to cash out sick and vacation time throughout their career with the exception of Local 3631 Firefighter unit which can only cash out vacation time. However, the majority of sick and vacation payouts occur at the time an employee retires.

The OCFA has budgeted $3.9 million for sick and vacation payouts in FY 2016/17 based on historical trends and expected retirements. OCFA's total liability for compensated absences as of June 30, 2016, is $17.0 million.

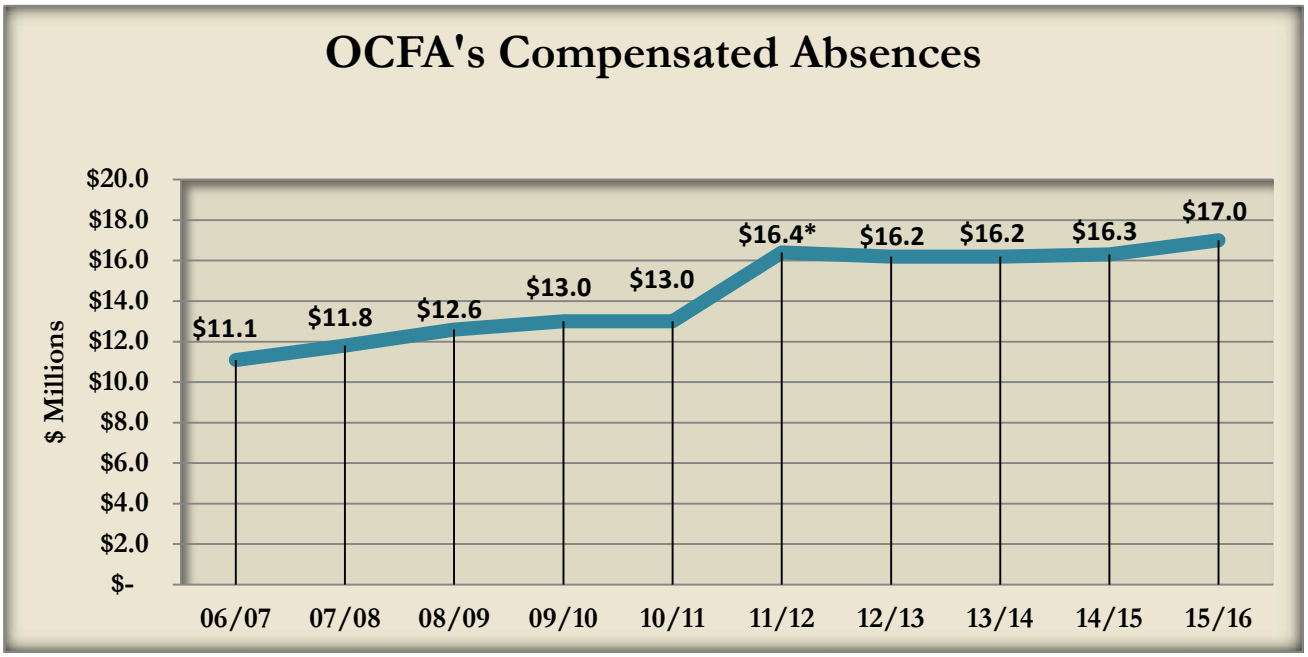

** FY 11/12 includes Santa Ana General Leave Balances; Santa Ana reimburses OCFA for uses of transferred Leave Balances.*

III. SUMMARY

OCFA's total long term, unfunded liabilities as of June 30, 2016,* are as follows:

	$ Amount in Millions	*% of Total*
Defined Benefit Pension Plan *	$419.0	77.5%
Defined Benefit Retiree Medical Plan	98.6	18.2
Helicopter Lease Purchase Agreement	6.3	1.2
Accrued Compensated Absences	17.0	3.1
Total	**$540.9**	**100.0%**

*Note: the valuation date for the pension plan is December 31, 2015, instead of June 30, 2016, consistent with OCERS' calendar year basis for financial reporting.

When OCFA presented its first Liability Study to the Board in September 2012, the Board directed staff to identify strategies to lower and/or mitigate OCFA's long term liabilities. As shown in the chart below, as some of these strategies have been implemented, OCFA has reduced its total long term, unfunded obligations in the last few years.

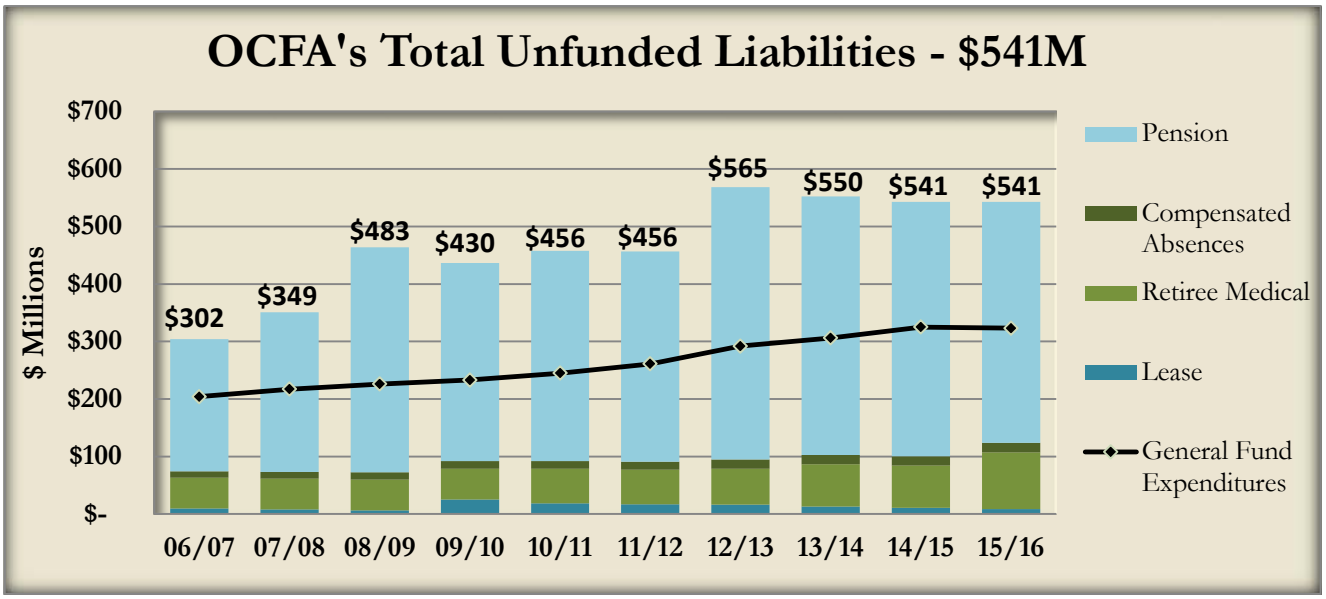

Note: Workers Compensation was removed since it is fully funded by a reserve fund.

ACTIONS TAKEN

OCFA has already taken several steps to manage its long-term obligations:

1. During 2015 and 2016, OCFA completed negotiations with all four labor groups resulting in increased employee contributions towards retirement.
2. On June 26, 2014, the Board approved an Alternative Dispute Resolution process for disputed workers' compensation cases, also known as a Carve-Out program. The State has approved the program and it was implemented on October 1, 2014.
3. On September 26, 2013, the Board approved a strategy to expedite the pay down of OCFA's pension liability. Under this Plan, the actuary, the Segal Company, estimates this liability will be paid by 2026/27. To date, OCFA has made an additional $45 million in payments to OCERS to lower its UAAL.
4. Completed a special actuarial study relating to the OCFA's Retiree Medical Defined Benefit Plan to evaluate options for potential plan amendments which could improve plan funding, subject to future negotiation with OCFA's labor groups. The results of the study were shared with the labor groups.
5. Evaluated the financial feasibility of paying off the outstanding lease financing obligations associated with the OCFA's helicopters, as part of the 2014/15 budget development process.
6. Directed staff to evaluate options for mitigating the budget and liability impacts of payouts for accumulated sick and vacation balances, subject to future negotiation with OCFA's labor groups.
7. Used a trigger formula during down economic cycles to connect pay raises for all OCFA employees to OCFA's financial health.
8. Implemented lower retirement formulas for all labor groups.
9. Refinanced the helicopter lease to lower the interest rate.
10. Implemented annual prepayment of retirement contributions to achieve a discount.
11. Provided a study to the Board of Directors regarding the feasibility of Pension Obligation Bonds.
12. Provided a study to the Board of Directors regarding the feasibility of changing automatic Cost of Living Allowance (COLA) increases for pensions; transmitted a copy of the report to the County Board of Supervisors and OCERS Board of Retirement, for their consideration of potential cost-containment actions relating to Pension COLAs under the authority granted by the '37 Act.

RECOMMENDATIONS

Recommended actions pending approval of this staff report include:

1. Direct staff to continue the Expedited Pension Payment Plan as indicated in the Updated Snowball Strategy.
2. Direct staff to return with the mid-year financial review to consider allocation of the $9.8 million of available unencumbered funds identified in the FY 2015/16 financial audit to OCFA's unfunded pension liability.
3. Direct staff to continue seeking cost-saving options related to Workers' Compensation.

CONCLUSION

In order to strategically fund long-term liabilities, OCFA must continue to strategically balance present-day needs with future commitments. The goal is for OCFA's budget over the long-term to fund all of its long-term liabilities

Exhibit A

OCFA Member Retirement Contributions

Safety Members' Retirement

Firefighter Safety members:
Effective September 2016, 2017, 2018, and 2019, employees will pay an additional 3.50%, 3.49%, 2.00%, and 0.54% in employee retirement contributions, respectively, increasing their employee contributions from 11% to 20.53% depending upon their age of entry. Employees hired on or after January 1, 2013, when PEPRA was enacted will continue to be subject to PEPRA requirements of 50% of normal cost for employee retirement contributions, which vary based on age of entry.

Chief Officer Safety members:
Effective July 2016, 2017, 2018, and 2019,employees will pay an additional 3.50%, 3.49%, 3.30%, and 0.93% in employee retirement contributions, respectively, increasing the employee contributions from 9% to 20.22% depending upon their age of entry. Thereafter, these employees will pay any subsequent increases in the employee retirement contributions. Employees hired on or after January 1, 2013, when PEPRA was enacted will continue to be subject to PEPRA requirements of 50% of normal cost for employee retirement contributions, which vary based on age of entry.

General Members' Retirement

OCEA members:
Effective March 2015, 2016 and 2017, employees hired prior to January 1, 2013, will pay an additional 2%, 2.5% and 3% in employee retirement contributions, respectively, increasing the employee contributions from 9% to 16.5%, depending upon their age of entry. Thereafter, these employees will pay any subsequent increases in the cost for employee retirement contributions. Employees hired after PEPRA was enacted will continue to be subject to PEPRA requirements of 50% of normal cost for employee retirement contributions, which vary based on age of entry.

Administrative Management members:
Effective July 2015, January 2016, and January 2017, employees hired prior to January 1, 2013, will pay an additional 4%, 2%, and 2.25% in employee retirement contributions, respectively, increasing the employee retirement contributions from 8.25% to 16.5%, depending upon their age of entry. Thereafter, these employees will pay any subsequent increases in the cost for employee retirement contributions. Employees hired after PEPRA was enacted will continue to be subject to PEPRA requirements of 50% of normal cost for employee retirement contributions, which vary based on age of entry.

Executive Management:
Some members of Executive Management fall under Safety and others fall under General member categories. Regardless, all Executive Management employees who are not subject to the provisions of PEPRA were paying 9% in employee retirement contributions prior to March 2015. Effective March 2015, they began phased-in increases to their contribution rate with a 2% increase in employee contributions in year one, a 2.5% increase in year two and payment of full member contributions in year three, which vary based on age of entry.

Orange County Fire Authority
Expedited Payment of UAAL
Snowball Effect of Multiple Strategies

Attachment 2

			Estimated Annual UAAL Payments from Various Strategies / Sources					
Years From Start of Plan	**Remaining Years to Completion**	**Fiscal Year**	**Unencumbered Fund Balance Available**	**Annual Savings from PEPRA Reductions to Retirement Contribution Rates**	**Budget Increase of $1M, grows by $2M/year to $15M**	**Budget Increase of $1M/year Funded by Excess W/C Reserves**	**Annual Snowball Amount**	**Cumulative Expedited UAAL Payment**
			Part A	**Part B**	**Part C**	**Part D**		
1		13/14	3,000,000	2,500,000	-	-	5,500,000	5,500,000
2		14/15	21,290,238	-	-	-	21,290,238	26,790,238
3		15/16	12,609,380	2,802,122	-	-	15,411,502	42,201,740
4		16/17	3,000,000	1,653,114	1,000,000	1,000,000	6,653,114	48,854,854
5	1	17/18	3,000,000	1,886,420	3,000,000	1,000,000	8,886,420	57,741,274
6	2	18/19	3,000,000	3,167,397	5,000,000	1,000,000	12,167,397	69,908,671
7	3	19/20	3,000,000	1,648,658	7,000,000	1,000,000	12,648,658	82,557,329
8	4	20/21	3,000,000	2,368,859	9,000,000	1,000,000	15,368,859	97,926,188
9	5	21/22	3,000,000	3,279,280	11,000,000		17,279,280	115,205,468
10	6	22/23	3,000,000	4,787,217	13,000,000		20,787,217	135,992,685
11	7	23/24	3,000,000	5,772,547	15,000,000		23,772,547	159,765,232
12	8	24/25	3,000,000	6,814,115	15,000,000		24,814,115	184,579,347
13	9	25/26	3,000,000	14,242,631	15,000,000		32,242,631	216,821,978
14	10	26/27	3,000,000	19,647,456	15,000,000		37,647,456	254,469,434
			69,899,618	70,569,816	109,000,000	5,000,000	254,469,434	

Orange County Fire Authority

AGENDA STAFF REPORT

Board of Directors Meeting
November 17, 2016

Agenda Item No. 5C
Discussion Calendar

Audited Financial Reports for the Fiscal Year Ended June 30, 2016

Contact(s) for Further Information

Lori Zeller, Assistant Chief Business Services Department	lorizeller@ocfa.org	714.573.6020
Jim Ruane, Finance Manager/Auditor (Presenter)	jimruane@ocfa.org	714.573.6304
Tammie Pickens, General Accounting Manager	tammiepickens@ocfa.org	714.573.6320

Summary

This annual agenda item is submitted to present the OCFA's audited Comprehensive Annual Financial Report (CAFR) and other audited financial reports for the fiscal year ended June 30, 2016, in compliance with the provisions of Section 6505 of the California Government Code and the Amended Joint Powers Agreement.

Prior Board/Committee Action

Budget and Finance Committee Recommendation: *APPROVE*

At its regular October 12, 2016, meeting, the Budget and Finance Committee reviewed and unanimously recommended approval of this item.

RECOMMENDED ACTION(S)

1. Receive and approve the reports.
2. Review the calculations used to determine the fund balance amounts assigned to the capital improvement program and workers' compensation, and confirm the calculations' consistency with the OCFA's Assigned Fund Balance Policy.

Impact to Cities/County

Not Applicable.

Fiscal Impact

Not Applicable.

Background

See attached expanded background.

Attachment(s)

1. Comprehensive Annual Financial Report (CAFR) for the Year Ended June 30, 2016
2. Financial Statements for the Year Ended June 30, 2016
3. Report on Internal Control for the Year Ended June 30, 2016
4. Single Audit Report for the Year Ended June 30, 2016
5. Audit Communication Letter for the Year Ended June 30, 2016
6. Assigned Fund Balance Policy
7. Assigned Fund Balance Calculations as of June 30, 2016 for:
   A. Capital Improvement Program
   B. Workers' Compensation
8. Calculation of Unencumbered Fund Balance as of June 30, 2016

Attachment 1

Orange County Fire Authority

Comprehensive Annual Financial Report
Fiscal Year Ended June 30, 2016

Orange County, California
Business Services Department / Finance Division

Orange County Fire Authority
Comprehensive Annual Financial Report
Year ended June 30, 2016

Board of Directors
As of June 2016

Gene Hernandez, Chair
City of Yorba Linda
(Board Member Since 2013)

Elizabeth Swift, Vice Chair
City of Buena Park
(Board Member Since 2011)

Phillip Tsunoda
City of Aliso Viejo
(Board Member Since 2011)

Rob Johnson
City of Cypress
(Board Member Since 2013)

Joseph Muller
City of Dana Point
(Board Member Since 2015)

Jeffrey Lalloway
City of Irvine
(Board Member Since 2013)

Michele Steggell
City of La Palma
(Board Member Since 2015)

Don Sedgwick
City of Laguna Hills
(Board Member Since 2015)

Laurie Davies
City of Laguna Niguel
(Board Member Since 2016)

Noel Hatch
City of Laguna Woods
(Board Member Since 2013)

Dwight Robinson
City of Lake Forest
(Board Member Since 2015)

Shelley Hasselbrink
City of Los Alamitos
(Board Member Since 2015)

Ed Sachs
City of Mission Viejo
(Board Member Since 2015)

Craig Green
City of Placentia
(Board Member Since 2015)

Carol Gamble
City of Rancho Santa Margarita
(Board Member Since 2011)

Bob Baker
City of San Clemente
(Board Member Since 2012)

John Perry
City of San Juan Capistrano
(Board Member Since 2015)

Angelica Amezcua
City of Santa Ana
(Board Member Since 2015)

David Sloan
City of Seal Beach
(Board Member Since 2010)

David Shawver
City of Stanton
(Board Member Since 1995)

Al Murray
City of Tustin
(Board Member Since 2011)

Rick Barnett
City of Villa Park
(Board Member Since 2013)

Tri Ta
City of Westminster
(Board Member Since 2009)

Lisa Bartlett
County of Orange
(Board Member Since 2015)

Todd Spitzer
County of Orange
(Board Member Since 2013)

Jeff Bowman
Fire Chief

Prepared by Finance Division
Photos provided by Multimedia

Orange County Fire Authority

Mission

We enhance public safety and meet the evolving needs of our communities through education, prevention, and emergency response.

Vision

OCFA is a premier public service agency providing superior services that result in no lives or property lost. We reach this through exceptional teamwork and strong partnerships in our community.

Guiding Principles

The Board, management, and members of OCFA are committed to upholding the following guiding principles in how we run our organization and work with each other:

- Service
- Safety
- Financial Responsibility
- Teamwork
- Trust
- Excellence
- Ethics
- Personal Responsibility
- Care and Respect
- Honesty and Fairness
- Reliability
- Diversity
- Integrity

Customer Service Motto

We visualize problems and solutions through the eyes of those we serve.

ORANGE COUNTY FIRE AUTHORITY
Comprehensive Annual Financial Report
Year ended June 30, 2016

TABLE OF CONTENTS

INTRODUCTORY SECTION:

Transmittal Letter iii
Organization Chart xiii
Management Staff and Appointed Officials xiv
Organization of Board of Directors xv
Certificate of Achievement for Excellence in Financial Reporting xvi

FINANCIAL SECTION:

Independent Auditors' Report 1

Management's Discussion and Analysis 5

Basic Financial Statements:
- Government-wide Financial Statements:
  - Statement of Net Position 28
  - Statement of Activities 30
- Fund Financial Statements:
  - Governmental Funds:
    - Balance Sheet 34
    - Reconciliation of the Balance Sheet of Governmental Funds to the Statement of Net Position 36
    - Statement of Revenues, Expenditures and Changes in Fund Balances 38
    - Reconciliation of the Statement of Revenues, Expenditures and Changes in Fund Balances of Governmental Funds to the Statement of Activities 40
    - Budgetary Comparison Statement – General Fund 42
  - Fiduciary Funds:
    - Statement of Fiduciary Net Position 43
    - Statement of Changes in Fiduciary Net Position 44
- Notes to the Financial Statements 45

Required Supplementary Information:
- OCERS Retirement Plan:
  - Schedule of OCFA's Proportionate Share of the Net Pension Liability 95
  - Schedule of Contributions 96
- Extra Help Retirement Plan:
  - Schedule of Changes in Net Pension Liability and Related Ratios 98
  - Schedule of Funding Progress 99
  - Schedule of Investment Returns 100
- Retiree Medical Plan:
  - Schedule of Funding Progress 101
  - Schedule of Contributions from the Employer and Other Contributing Entities 102

Supplementary Schedules:
- Major Governmental Funds:
  - Budgetary Comparison Schedules:
    - Communications and Information Systems 104
    - Fire Apparatus 105

TABLE OF CONTENTS (Continued)

Fire Stations and Facilities 106

Components of General Fund:
Combining Balance Sheet 108
Combining Schedule of Revenues, Expenditures and Changes in Fund Balances 110
Combining Original Budget 112
Combining Final Budget 114

STATISTICAL SECTION (Unaudited):

Overview of the Statistical Section 117

Financial Trends Information:
Net Position by Component – Last Ten Fiscal Years 120
Changes in Net Position – Last Ten Fiscal Years 122
Fund Balances of Governmental Funds – Last Ten Fiscal Years 124
Changes in Fund Balances of Governmental Funds – Last Ten Fiscal Years 126

Revenue Capacity Information:
Assessed Value and Estimated Actual Value of Taxable Property – Last Ten Fiscal Years 130
Property Tax Rates of Direct and Overlapping Governments – Last Ten Fiscal Years 132
Principal Property Tax Payers – Current and Nine Years Ago 133
Property Tax Levies and Collections – Last Ten Fiscal Years 134

Debt Capacity Information:
Ratios of Outstanding Debt by Type – Last Ten Fiscal Years 136
Ratios of General Bonded Debt Outstanding – Last Ten Fiscal Years 137

Demographic and Economic Information:
Demographic and Economic Indicators – Last Ten Fiscal Years 140
Population and Housing Statistics – Current and Nine Years Ago 141
Principal Employers – Current and Nine Years Ago 142

Operating Information:
Authorized Positions by Function/Fund/Department – Last Ten Fiscal Years 144
Authorized Positions by Unit – Last Ten Fiscal Years 145
Frozen Positions by Department – Last Ten Fiscal Years 146
Jurisdiction Information – Last Ten Fiscal Years 147
Incidents by Type – Last Ten Fiscal Years 148
Incidents by Member Agency – Last Ten Fiscal Years 149
Incidents by Major Category Definitions 150
Capital Equipment by Category – Last Nine Fiscal Years 152
Capital Vehicles by Category – Last Nine Fiscal Years 156
Map of Division/Battalion Boundaries and Station Locations 161
List of Stations by Member Agency 162
Description of the Organization, Programs and Service Delivery 164

Introductory

Section

ORANGE COUNTY FIRE AUTHORITY
P. O. Box 57115, Irvine, CA 92619-7115 • 1 Fire Authority Rd., Irvine, CA 92602
Jeff Bowman, Fire Chief (714) 573-6000 www.ocfa.org

September 30, 2016

The Board of Directors
Orange County Fire Authority
1 Fire Authority Road
Irvine, California 92602

We are pleased to present the Comprehensive Annual Financial Report (CAFR) of the Orange County Fire Authority (OCFA) for the fiscal year ended June 30, 2016. This report consists of management's representations concerning the finances of the OCFA and is presented using the financial reporting model outlined in the Governmental Accounting Standards Board (GASB) Statement No. 34. Consequently, management assumes full responsibility for the completeness and reliability of all of the information presented in this report. As management, we assert that, to the best of our knowledge and belief, this financial report is complete and reliable in all material respects.

To provide a reasonable basis for making its representations, OCFA management has established a comprehensive internal control framework. This framework is designed to provide reasonable assurance that assets are safeguarded against loss from unauthorized use or disposition and that accounting transactions are executed in accordance with management's authorization and properly recorded so that the financial statements can be prepared in conformity with generally accepted accounting principles (GAAP). The objective of the internal control framework is to provide reasonable, rather than absolute, assurance that the financial statements are free of any material misstatements. The design and operation of internal controls also ensures that federal and state financial assistance funds are expended in compliance with applicable laws and regulations related to those programs.

OCFA's financial statements have been audited by Lance, Soll & Lunghard, LLP, a firm of certified public accountants. The independent auditor concluded, based upon the audit, that there was a reasonable basis for rendering an unmodified opinion that the OCFA's financial statements for the fiscal year ended June 30, 2016, are fairly presented in conformity with GAAP. The independent auditors' report is presented as the first component of the financial section of this report.

The Management's Discussion and Analysis (MD&A) narrative provides "financial highlights" and interprets the financial reports by analyzing trends and by explaining changes, fluctuations and variances in the financial data. The MD&A is also intended to disclose any known significant events or decisions that affect the financial condition of the OCFA. The MD&A complements, and should be read in conjunction with, this letter of transmittal.

Background Information on the OCFA

OCFA was formed on March 1, 1995, transitioning from the Orange County Fire Department to a joint powers authority (JPA) as allowed by California State Government Code 6500 et seq. OCFA is an independent organizational entity similar to a special district, and is the largest regional service organization in Orange County and one of the largest in California. The service area includes twenty-three member cities and the unincorporated areas of Orange County, California. A twenty-five member Board of Directors governs the OCFA. This Board includes an elected official appointed to represent each of the twenty-three member cities and two representatives from the County Board of Supervisors. OCFA is managed by an appointed Fire Chief who reports to the Board of Directors.

The annual budget serves as the foundation for OCFA's financial planning and control. The budget development process begins in November. The budget team compiles the input received from the section/division managers who follow the policies and guidelines established by Executive Management. The results are presented to Executive Management for review and prioritization. The draft budget is further refined through various committee reviews, including a City Managers' Budget and Finance Committee, a Capital Improvement Program Ad Hoc Committee, and the OCFA Budget and Finance Committee. The OCFA Budget and Finance Committee recommends the budget for approval by the Board of Directors in May or June. The Board has the option of holding a public hearing on the proposed budget, and is required to adopt a final budget by no later than June 30, the close of the OCFA's fiscal year.

The appropriated budget is allocated by fund and department. Department Chiefs may make transfers of appropriations between sections within a department. Transfers of appropriations between departments require the approval of Executive Management, and transfers between funds require the approval of the Board. Budget-to-actual comparisons are provided in this report for each individual governmental fund for which an appropriated annual budget has been adopted. Budgetary Comparison Statements for the General Fund and all major special revenue funds, if any, are presented in the governmental funds section of the accompanying financial statements. Budgetary Comparison Schedules for all remaining governmental funds with appropriated annual budgets are presented in the supplementary schedules section of the accompanying financial statements.

Information on Orange County and the Local Economy[1]

The information presented in the financial statements is perhaps best understood when it is considered from the broader perspective of the local economic environment within which the OCFA operates.

Orange County Profile:

Orange County is located along the southern coast of California, with Los Angeles County to the north; San Diego County to the south; and Riverside and San Bernardino counties to the east. Orange County covers an area of 799 square miles, with 42 miles of coastline along the Pacific Ocean, and is home to over 3.1 million people. There are thirty-four cities in Orange County. OCFA provides regional fire services to twenty-three of those cities, along with the unincorporated areas throughout the county.

[1] Portions throughout this section obtained from the *2016 Community Indicators Report* published by the Children & Families Commission of Orange County, released July 2016. The report may be viewed in its entirety at *http://occhildrenandfamilies.com/wp-content/uploads/2014/12/OCCIR_2016_WebRev.pdf*

Population and Demographics:

Orange County's population continues to grow; however the proportion of seniors is increasing as compared to the proportion of all other age groups. Residents over the age of sixty-five currently comprise 14% of Orange County's population, a number that is expected to rise to 24% by the year 2040. This change in the county's demographics is projected to continue, and may impact the long-term ability to sustain schools, pensions, and other government support to members of the community. Overall, Orange County is comparable to state and national averages in regards to the financial stability of its residents. However, the county does experience geographic concentrations of wealth and poverty. Approximately 37% of neighborhoods throughout Orange County have high concentrations of families that are considered financially challenged based on their income, employment, and housing expenses. Although there has been slight improvement over the previous year, approximately 22% of Orange County's residents live in poverty.

Employment and Housing:

Orange County's economy has maintained its long-time condition of being "job rich" and "housing poor." The unemployment rate has fallen from a ten-year high of 10.1% in March 2010 down to 4.1% in December 2015. Orange County's four largest employment sectors – tourism, business/professional, health services, and construction – have kept pace with inflation but have not experienced significant growth in the last year. Construction is not keeping pace with the growing number of jobs, and the housing that is being built is not affordable to those with lower incomes. The minimum household income needed for a first-time homebuyer to purchase a single-family home priced at 85% of the Orange County median was $86,870. Approximately 43% of Orange County households can afford to purchase at this price. As a result, many younger and middle-aged adults are leaving the county in search of more affordable housing; businesses are unable to find workers to fill vacant positions; and those living in crowded or poverty conditions are spending a greater portion of their income on housing.

Property Taxes:

The most significant local economic factor impacting OCFA is Orange County's housing market, including fluctuations in new construction activities and housing prices. Property taxes derived from these activities comprised 61.5% of the OCFA's total governmental funds revenues in Fiscal Year 2015/16. As shown in the chart below, OCFA's property tax revenues have been steadily increasing for the last five fiscal years.

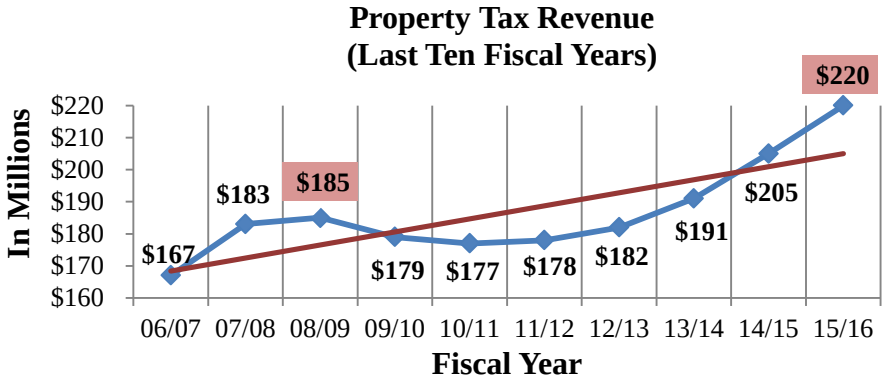

Property tax revenues in Fiscal Year 2015/16 totaling $220 million surpassed the pre-recession peak from Fiscal Year 2008/09 by over $35 million (19.0%). This increase is attributed primarily to appreciation in Orange County's housing prices and an increase in new housing development. Orange County's real estate market continues to improve. Housing prices have risen substantially, and have nearly reached the same levels that

existed prior to the 2007 housing downturn. In January 2016, Orange County's median single family home price was $704,950. For comparison purposes, the price peak was $747,260 in April 2007, and the price low was $432,100 in January 2009.

Long-term Financial Planning

Since its formation in 1995, OCFA has been preparing multi-year projections of its revenues and expenditures. For the past twenty years, a firm of property tax consultants has been retained to assist in the projection of the OCFA's single largest revenue source – property taxes. With these projections and a collection of conservative assumptions, the OCFA forecasts its financial condition five years into the future. Various scenarios can be developed from the forecast to assess the impact of proposed or impending changes to the budget, the economy or the underlying assumptions. As a result, this tool provides an early warning of potential financial difficulties. Historically, OCFA's method of projecting its property tax revenue was to increase the value of existing structures by the 2% constitutional maximum, increase these values to account for re-sales, and add in the value of any new development. During the recession, those techniques were adjusted to incorporate the appreciation or depreciation rate set by the State Board of Equalization, the potential for the County Assessor to reassess existing structures, and the possibility that re-sales might actually decrease the assessed values. However, with the recession ended and housing showing signs of recovery, OCFA has, in conjunction with its property tax consultant, returned to its previous practice for estimating property tax growth.

Relevant Financial Policies

The OCFA Board of Directors has adopted the following formal budgetary and fiscal policies:

Financial Stability Budget Policy – This policy is intended to guide the OCFA budget actions toward maintaining long-term financial stability and to establish fund balance levels and annual funding targets for the General Fund and Capital Improvement Program (CIP).

Fiscal Health Plan – The purpose of this plan is to establish a framework for ensuring an ongoing focus on fiscal health and a general process to ensure timely and appropriate response to adverse fiscal circumstances. The cornerstones of this plan are a set of strong fiscal policies and a comprehensive system for monitoring OCFA's fiscal performance. Financial indicators are monitored through frequent updates of the OCFA's five-year financial forecast to evaluate stability, strength, or weaknesses of OCFA's finances.

Investment Policy – This policy is updated annually to reflect changes in legislation and the changing needs of the OCFA. It specifies the types of investments allowed in the OCFA portfolio, as well as the diversification and maturity requirements for investments.

Roles/Responsibilities/Authorities for the OCFA – This document identifies those roles and responsibilities that have been retained by the Board, as well as responsibilities that have been delegated. All authority rests with the Board unless it is delegated by statute or Board action. When delegated, these authorities are further defined by contracts, resolutions, policies and/or other Board actions.

Accounts Receivable Write-off Policy for Uncollectible Accounts – This policy establishes the criteria and procedures for requesting uncollectible amounts to be written off.

Short-term Debt Policy – This policy establishes guidelines for managing the OCFA's cash flow position in a fiscally conservative manner through the issuance of short-term debt.

Emergency Appropriations Policy – This policy, which was adopted in September 2008, establishes guidelines for increasing appropriations in the event of extraordinary fire or emergency activity following the last Board meeting of the fiscal year.

Assigned Fund Balance Policy – This policy, which was adopted in April 2011 and amended effective July 2014, establishes the authority by which OCFA may set aside cumulative resources in fund balance for an intended future use.

Grants Management Policy – This policy, which was effective January 2012, establishes an overall framework for guiding OCFA's use and management of grant resources.

Capital Projects Fund Policy – This policy, which was effective July 2014, defines the types of allowable activities that may be accounted for in OCFA's capital projects funds, as defined by Governmental Accounting Standard Board (GASB) Statement No. 54.

Major Initiatives Expected to Affect Future Financial Positions

OCFA has established the following strategic objectives for both the current and upcoming fiscal years:

Strategic Objectives for Fiscal Years 2015/16 and 2016/17
1. Improve OCFA communications at all levels
2. Establish consistency in Human Resources functions and improve labor relations
3. Conduct analysis of field operations and internal support functions
4. Focus on fiscal health
5. Build customer service mindset
6. Improve risk management outcomes
7. Implement performance improvement/efficiency measures
8. Improve public safety technology systems
9. Develop a Continuity of Operations Plan (COOP) for OCFA
10. Maintain flexibility for unforeseen events

Various initiatives, along with performance measures designed to document and assess progress toward their completion, have been identified for each of the ten strategic objectives. Highlights of select initiatives that have the potential to impact OCFA's future financial positions are described below.

Establish Working Groups to Address Operational Issues – Various working groups have been established to analyze operational issues, and to develop and implement action plans that will enhance the quality, efficiency, and effectiveness of how public safety services are provided to OCFA's member agencies and the citizens of Orange County.

- **Emergency Medical Services (EMS) Delivery Enhancements** – The Board of Directors has approved the phase-in and ongoing evaluation of enhancements to the EMS deployment model, as feasible, at six month intervals. These changes are intended to improve levels of service; enhance firefighter safety; reduce response times on advanced life support (ALS) medical calls; reduce the number of responding units; and reduce the need for automatic aid support from neighboring cities. In July 2015, "Phase 1" was implemented in the cities of Dana Point, Laguna Niguel, Tustin, and Yorba Linda. Unit reconfigurations in these cities included the conversion of two paramedic assessment trucks to paramedic trucks; one paramedic assessment engine to a paramedic engine; and one medic van to two

paramedic engines. The Fiscal Year 2015/16 financial impact totaled approximately $860,000 to account for additional paramedic specialty skill compensation and the addition of one firefighter paramedic position. In February 2016, "Phase 2" was implemented in the cities of Irvine, Lake Forest, Mission Viejo, and Santa Ana. Unit reconfigurations included the conversion of six paramedic vans and twelve paramedic assessment engines to twelve paramedic engines; and the conversion of one paramedic assessment truck to a paramedic truck. The Fiscal Year 2015/16 financial impact totaled approximately $185,000 (pro-rated) to account for additional paramedic specialty skill compensation. Ongoing annual costs of Phase 2 are anticipated to total approximately $375,000. The desired outcome of EMS delivery enhancements is measured by response data, which continues to be evaluated at six-month intervals. Below is a summary of the Fiscal Year 2015/16 financial impacts of the EMS delivery enhancements.

			Fiscal Year 2015/16 Financial Impact	
City	**From**	**To**	**Phase 1 (Full)**	**Phase 2 (Partial)**
Dana Point	PAU* Engine 30	Paramedic Engine 30	$662,409	$ -
Irvine	PAU Engine 4 / Medic Van 4 PAU Engine 26 / Medic Van 26 PAU Engine 28 PAU Engine 38 / Medic Van 38 PAU Engine 47 PAU Engine 55	Paramedic Engine 4 Paramedic Engine 26 Paramedic Engine 28 Paramedic Engine 38 Paramedic Engine 47 Paramedic Engine 55	-	61,416
Laguna Niguel	PAU Truck 49	Paramedic Truck 49	66,329	-
Lake Forest	PAU Engine 54	Paramedic Engine 54	-	30,708
Mission Viejo	PAU Engine 31 / Medic Van 31	Paramedic Engine 31	-	30,708
Santa Ana	PAU Engine 70 PAU Truck 76 PAU Engine 77 / Medic Van 77 PAU Engine 78 / Medic Van 78 PAU Engine 79	Paramedic Engine 70 Paramedic Truck 76 Paramedic Engine 77 Paramedic Engine 78 Paramedic Engine 79	-	61,416
Tustin	PAU Truck 43	Paramedic Truck 43	66,329	-
Yorba Linda	Medic Van 32	Paramedic Engine 32 Paramedic Engine 10	66,329	-
	** PAU = Paramedic Assessment Unit*		**$861,396**	**$184,248**

- **Hazardous Materials Response Team (HMRT) Program** – OCFA's HMRT program is responsible for responding to industrial hazardous materials and weapons of mass destruction (WMD) incidents. It is one of three such programs to exist in Orange County. The program has experienced operational staffing issues pertaining to personnel recruitment and retention, training costs, and workload impacts. In order to address these issues and provide improved program longevity, the Board of Directors approved the establishment of 2.5% specialty compensation effective March 2016 for HMRT members who have obtained a specialist certification and have been assigned to the team for a minimum of two years. By providing this incentive, it is anticipated that employees will remain in the program longer, that OCFA will realize an offsetting reduction in its training costs, and that OCFA's regional response capability to serve the citizens of Orange County will improve. The Fiscal Year 2015/16 financial impact of this change was approximately $65,000, while the ongoing financial impact, net of training cost savings, is expected to be approximately $70,000 annually.

- **Urban Search and Rescue (USAR) and Technical Rescue Truck (TRT) Operations and Staffing** – Like the HMRT program, the USAR/TRT specialty program has also experienced ongoing issues in regards to personnel retention, unit availability and response, and training costs. In order to address these issues and improve OCFA's response capabilities, the Board of Directors approved the establishment of 7.5% specialty compensation effective March 2016 for all USAR-trained TRT personnel. Other recommended program changes included a daily staffing model that will guarantee resource availability; modified training and skill set requirements; a reduction in the number of air operations support trucks; establishment of an interview process for Fire Captain positions; an updated dispatch response matrix for USAR assets; and establishment of a group of qualified part-time USAR team to support staffing needs. The Fiscal Year 2015/16 fiscal impact of this change was approximately $265,000, while the net ongoing financial impact, including a reduction in training costs, is expected to be approximately $410,000 annually.

- **Air Operations Program Paramedic Position** – In February 2015, the Board of Directors approved a six-month trial to implement staffing changes to the Air Operations Program. Program changes included implementation of a 24/7, three platoon schedule and the addition of a firefighter paramedic position on weekends. During the trial period, helicopter availability more than doubled, and OCFA personnel responded to 18% more incidents that previously would have fallen out of the non-24/7 work schedule. During the trial period, more than half of the incidents that the helicopter responded to were medical in nature, and twenty-two patients were provide paramedic level escort while being transported with the helicopter. This enhancement improved patient care, increased safety, and reduced response times by eliminating the need to land and pick up a paramedic. By providing an Advance Life Support (ALS) capability to the helicopter, OCFA has provided a better depth of service than it previously had and has become more versatile in its response coverage. Based on the results of the trial, in January 2016 the Board of Directors approved the permanent addition of a firefighter paramedic post position at an annual ongoing cost of approximately $665,000. The pro-rated Fiscal Year 2015/16 fiscal impact of this program change was approximately $330,000.

Focus on Long-term Fiscal Health for OCFA and Its Members – OCFA remains focused on the pursuit of fiscal health, seeking to ensure that services delivered are sustainable into the future. In January 2016, a mid-year financial report was presented to the Board of Directors that reflected continued improvement in OCFA's fiscal health and also allocated approximately $12.6 million toward the pay-down of the Unfunded Actuarial Accrued Liability (UAAL) with the Orange County Employees Retirement System (OCERS). In addition, the Fiscal Year 2016/17 budget was adopted by the Board of Directors in May 2016, reflecting a balanced General Fund, cash contract increases to member cities that were below the allowable cost cap, and a flow of surplus funds from the General Fund to the Capital Improvement Program.

Second Amendment to the JPA and New Equity Options – In response to past concerns from OCFA member agencies about the relationship of financial contributions to level of service received, the Board of Directors empowered an Equity Ad Hoc Committee (Committee) to identify methods for mitigating equity concerns. In September 2013, the Board approved a solution presented by the Committee which required OCFA to issue equity payments to qualifying Structural Fire Fund (SFF) agencies, based on a calculation of average SFF Tax Rate. The solution required that equity payments be made from unrestricted revenue sources (non-property tax revenues). A Second Amendment to the JPA (2nd Amendment) was ratified by member agencies in November 2013, and concurrently the Board approved requesting a judicial review of the 2nd Amendment to seek court validation. On August 7, 2014, the 2nd Amendment was declared invalidated. OCFA and the City of Irvine appealed the decision; however, in March 2016 the appellate court issued an opinion affirming the 2nd Amendment's invalidation and thus overturning equity solutions that were previously put in

motion by the Committee. In May 2016, the Board voted to conduct any future discussions of new proposals regarding member equity at regular Board meetings in lieu of forming a new Equity Ad Hoc Committee.

Accelerated Pay-Down of Pension Liability with the Orange County Employees Retirement System – In September 2013, the Board of Directors approved several strategies to accelerate funding OCFA's Unfunded Actuarial Accrued Liability (UAAL) with the Orange County Employees Retirement System (OCERS). Those strategies, referred to as the "Snowball Plan," were revised in November 2015 to include the following: (1) using unencumbered fund balance available at the close of each fiscal year to make annual lump sum payments, estimated at an average amount of $3 million annually; (2) including savings from reduced retirement rates resulting from the implementation of the Public Employees' Pension Reform Act in the annual budget to make bi-weekly additional payments; (3) budgeting an additional $1 million beginning in Fiscal Year 2016/17, and increasing by $2 million each year until reaching an annual amount of $15 million; and (4) contributing $1 million annually for five years, beginning in Fiscal Year 2016/17, from surplus fund balance available from the General Fund's fund balance assignment for workers' compensation. OCFA has been making additional payments toward its UAAL annually since Fiscal Year 2013/14, with additional payments made during Fiscal Year 2015/16 totaling $15.5 million. A recent estimate received from the OCERS actuary indicated that accelerated payments have shortened the timeline to pay down the UAAL from an original twenty-nine years to twelve years. The Board of Directors is updated annually on the status of the pay-down plan.

Improve Risk Management Outcomes – A workers' compensation injury analysis was completed in Fiscal Year 2015/16 in an attempt to reduce annual claims, expenses, and backfill costs as a result of work-related injuries. OCFA's goal was to reduce its claims costs by 5-10%, and also to return 75% of injured employees who are released by a physician to light duty work within four days. Although the number of open workers' compensation claims declined by 2% during Fiscal Year 2015/16, employee salary and claim costs for the program both increased. Moving into Fiscal Year 2016/17, OCFA will continue to focus on maintaining or reducing its workers' compensation costs.

Progress on the Public Safety System Project – OCFA is in the process of a major, multi-year project to replace its Public Safety System (PSS), which has been in use since the 1980's. The Computer Aided Dispatch (CAD) portion was completed and went live on September 9, 2014, marking a tremendous milestone for the PSS project as a whole. Building on the successful CAD implementation, OCFA will continue to work in Fiscal Year 2016/17 toward establishing timelines and objectives for the replacement of the Records Management System (RMS) portion of the Public Safety System, which includes the Orange County Fire Incident Reporting System (OCFIRS), Integrated Fire Prevention (IFP), and Investigations Case Management System (ICMS) applications. The Fiscal Year 2016/17 Capital Improvement Program budget includes funding for both the OCFIRS and IFP applications totaling approximately $1.3 million.

Labor Negotiations for Expiring Firefighter MOU – The Memorandum of Understanding (MOU) with Orange County Professional Firefighters Association (OCPFA) for the firefighter bargaining unit expired in October 2015, and was extended to allow additional time for negotiations. Negotiation sessions between OCFA management and OCPFA were in progress throughout Fiscal Year 2015/16, and an MOU was approved at a special meeting of the Board of Directors September 1, 2016. The four-year MOU extends through August 2020 and accomplishes the Board's goal of having employees pay 100% of the employee portion of retirement contributions. The financial impact of the MOU is the cost-equivalent of a 10.44% salary increase over a four-year period, with an average dollar increase of $5.4 million annually.

Hiring for Vacancies and Frozen Positions

A hiring freeze for positions that do not provide front line service to the public went into effect during Fiscal Year 2008/09. As the economy has improved in recent years, positions have been unfrozen, when necessary, at a measured and sustainable pace. In addition, each position that becomes vacant through employee retirements and terminations is reviewed by Executive Management to determine whether the workload can be reassigned or if it will be necessary to fill the position. A total of 86 authorized positions were frozen as of June 30, 2016, a decrease of 11 positions as summarized below.

	June 30		
Frozen Positions	**2016**	**2015**	**+/-**
Recommendations from the 2008 Santiago After Action Report included the addition of a fourth firefighter on twelve wildland engines, to be phased in over multiple fiscal years. Phase one authorized the addition of 9 positions, which were subsequently frozen in Fiscal Year 2008/09 pending improved financial condition.	9	9	-
The addition of a four-person truck company at Fire Station No. 20 (Irvine) was deferred in Fiscal Year 2008/09 until development activity and service demand increases (12 positions). In addition, the station's 3-person engine and 2-person paramedic van were transitioned to a single 4-person paramedic engine during Fiscal Year 2010/11, resulting in 3 additional frozen firefighter positions.	15	15	-
Six staff captain positions (two training officers and Administrative Captains for Divisions 1, 3, 4 and 5) have been frozen since Fiscal Year 2010/11, with personnel transitioning to fill vacant suppression field positions.	6	6	-
As a result of a service reduction request by the City of Stanton in July 2012, the four-person truck company at Fire Station No. 46 (Stanton) was reconfigured and replaced by a two-person paramedic van, resulting in 3 frozen fire apparatus engineer and 3 frozen fire captain positions since Fiscal Year 2012/13. During Fiscal Year 2015/16, those 6 positions were unfrozen in conjunction with new Fire Station No. 56 (Village of Sendero), which became operational in July 2015.	-	6	(6)
In November 2012, the OCFA's agreement for Aircraft Rescue Firefighting services at John Wayne Airport was amended to reduce daily staffing from seven to six personnel, resulting in 3 frozen fire apparatus engineer positions since Fiscal Year 2012/13.	3	3	-
Vacancies remain frozen for an additional thirty-four suppression positions, including: Fire Apparatus Engineers (15 positions, backfilled with overtime); Fire Captains (15 positions, backfilled with overtime); Staff Battalion Chiefs (2 positions); Heavy Fire Equipment Operator (1 position); and Fire Pilot (1 position).	34	34	-
Subtotal – Suppression	67	73	(6)
Vacancies remain frozen for nineteen non-suppression positions.			
✓ Executive Management/Human Resources	2	3	(1)
✓ Operations	1	1	-
✓ Community Risk Reduction	9	12	(3)
✓ Business Services	4	4	-
✓ Support Services	3	4	(1)
Subtotal – Non-Suppression	19	24	(5)
Total frozen positions	86	97	(11)

Awards and Acknowledgments

The Government Finance Officers Association (GFOA) awarded a Certificate of Achievement for Excellence in Financial Reporting to the OCFA for its Fiscal Year 2014/15 Comprehensive Annual Financial Report (CAFR), the eighteenth consecutive year OCFA has received this prestigious award. In order to be awarded this certificate, a government must publish an easily readable and efficiently organized CAFR that satisfies both GAAP and applicable legal requirements. The certificate is valid for a period of one year. We believe our Fiscal Year 2015/16 CAFR continues to meet the program's requirements, and we are submitting it to the GFOA to determine its eligibility for this year's award.

The timely preparation of the CAFR was made possible by the dedicated efforts of the staff of the Finance Division. We acknowledge the support and direction provided to OCFA staff by the accounting firm of Lance, Soll & Lunghard, LLP. We would also like to express our appreciation to the Board of Directors and Budget and Finance Committee for their leadership and support in planning and conducting the financial operations of the OCFA in a responsible and progressive manner.

Respectfully submitted,

Jeff Bowman, Fire Chief

Lori Zeller, Assistant Chief of Business Services

ORANGE COUNTY FIRE AUTHORITY
Organization Chart
As of June 30, 2016

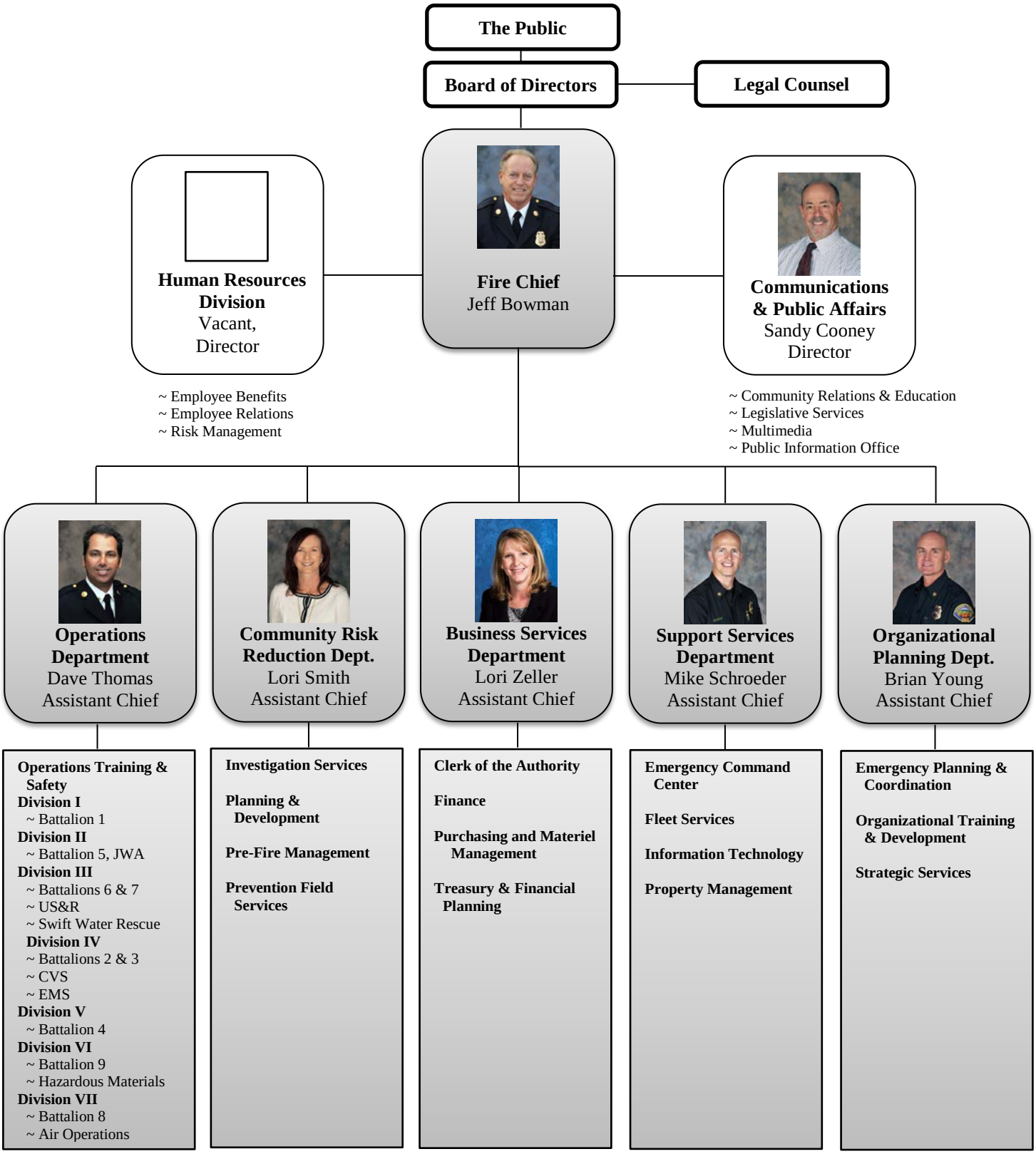

ORANGE COUNTY FIRE AUTHORITY
Management Staff and Appointed Officials
As of June 30, 2016

Jeff Bowman	Fire Chief
Dave Thomas	Assistant Chief Operations Department
Lori Smith	Assistant Chief Community Risk Reduction Department
Lori Zeller	Assistant Chief Business Services Department
Mike Schroeder	Assistant Chief Support Services Department
Brian Young	Assistant Chief Organizational Planning Department
Vacant	Director Human Resources Division
Sandy Cooney	Director Communications & Public Affairs
Sherry A.F. Wentz	Appointed – Clerk of the Authority
Jim Ruane	Appointed – Auditor
Patricia Jakubiak	Appointed – Treasurer
Woodruff, Spradlin, & Smart	General Counsel

ORANGE COUNTY FIRE AUTHORITY
Organization of Board of Directors
As of June 30, 2016

The Orange County Fire Authority Board of Directors has twenty-five members. Twenty-three of the members represent partner cities and two members represent the county unincorporated area. The Board of Directors meets monthly. Following are descriptions of each committee that has been established by the Board of Directors:

The **Executive Committee** meets monthly and conducts all business of the OCFA, with the exception of policy issues, including labor relations, budget issues and other matters specifically retained by the Board of Directors. The Executive Committee consists of no more than nine members of the Board of Directors. The committee membership is comprised of the following designated positions: the Chair and Vice Chair of the Board of Directors, the immediate past Chair of the Board, and the Chair of the Budget and Finance Committee. In addition, the Chair appoints five at-large members, subject to the approval of the Board of Directors. At least one member of the Board of Supervisors serves on this committee. In addition, the ratio of committee members representing cash contract cities to the total committee membership will be as close as reasonably possible to the ratio of the number of cash contract cities to total member agencies. The Chair of the City Managers Technical Advisory Committee serves as an ex officio non-voting member of the Executive Committee.

The **Budget and Finance Committee** meets monthly and advises staff and makes recommendations to the Board of Directors on matters related to financial and budget policies, development of budgets for the General Fund and capital expenditures, assignment of fund balances, budget balancing measures, evaluation and development of plans to meet long-term financing needs, investment oversight and purchasing policies. The Chair of the Board makes appointments to the Committee on an annual or as-needed basis. The Chair of the City Manager Budget and Finance Committee serves as an ex officio non-voting member of this committee. The Budget and Finance Committee is also designated to serve as the OCFA's audit oversight committee.

The **Claims Settlement Committee** has the authority to settle claims and lawsuits and pre-litigation claims for amounts above $50,000, not to exceed $250,000, including insurance pool settlements, workers' compensation settlements, and the initiation and settlement of subrogation claims. Settlements of lawsuits in amounts exceeding $250,000 are approved by the Board of Directors. The Claims Settlement Committee meets monthly and consists of the Board Chair and Vice Chair, the Budget and Finance Committee Chair, the Fire Chief, and the Human Resources Director.

The **Human Resources Committee** advises OCFA staff and makes recommendations to the Board of Directors on matters regarding human resources policies; job class specifications; compensation programs; benefit changes and renewals; staff training, development and recognition programs; succession planning; risk management and workers' compensation policies; and development of management/performance evaluation and information systems. The committee consists of five members of the Board of Directors, all of which are appointed by the Chair of the Board.

Government Finance Officers Association

Certificate of Achievement for Excellence in Financial Reporting

Presented to

Orange County Fire Authority
California

For its Comprehensive Annual
Financial Report
for the Fiscal Year Ended

June 30, 2015

Executive Director/CEO

Financial

Section

LSL

CPAs AND ADVISORS

INDEPENDENT AUDITORS' REPORT

To the Board of Directors
Orange County Fire Authority
Irvine, California

Report on the Financial Statements

We have audited the accompanying financial statements of the governmental activities, the discretely presented component unit, each major fund, and the aggregate remaining fund information of the Orange County Fire Authority, (the Authority) as of and for the year ended June 30, 2016, and the related notes to the financial statements, which collectively comprise the Authority's basic financial statements as listed in the table of contents.

Management's Responsibility for the Financial Statements

Management is responsible for the preparation and fair presentation of these financial statements in accordance with accounting principles generally accepted in the United States of America; this includes the design, implementation, and maintenance of internal control relevant to the preparation and fair presentation of financial statements that are free from material misstatement, whether due to fraud or error.

Auditor's Responsibility

Our responsibility is to express opinions on these financial statements based on our audit. We conducted our audit in accordance with auditing standards generally accepted in the United States of America and the standards applicable to financial audits contained in *Government Auditing Standards*, issued by the Comptroller General of the United States. Those standards require that we plan and perform the audit to obtain reasonable assurance about whether the financial statements are free from material misstatement.

An audit involves performing procedures to obtain audit evidence about the amounts and disclosures in the financial statements. The procedures selected depend on the auditor's judgment, including the assessment of the risks of material misstatement of the financial statements, whether due to fraud or error. In making those risk assessments, the auditor considers internal control relevant to the entity's preparation and fair presentation of the financial statements in order to design audit procedures that are appropriate in the circumstances, but not for the purpose of expressing an opinion on the effectiveness of the entity's internal control. Accordingly, we express no such opinion. An audit also includes evaluating the appropriateness of accounting policies used and the reasonableness of significant accounting estimates made by management, as well as evaluating the overall presentation of the financial statements.

We believe that the audit evidence we have obtained is sufficient and appropriate to provide a basis for our audit opinions.

To the Board of Directors
Orange County Fire Authority
Irvine, California

Opinions

In our opinion, the financial statements referred to above present fairly, in all material respects, the respective financial position of the governmental activities, the discretely presented component unit, each major fund, and the aggregate remaining fund information of the Orange County Fire Authority as of June 30, 2016, and the respective changes in financial position and the budgetary comparison for the General Fund, for the year then ended in accordance with accounting principles generally accepted in the United States of America.

Other Matters

Required Supplementary Information

Accounting principles generally accepted in the United States of America require that the management's discussion and analysis, the schedule of proportionate share of the net pension liability, the schedule of contributions, the schedule of changes in net pension liability and related ratios, the schedule of funding progress, and the schedule of investment returns be presented to supplement the basic financial statements. Such information, although not a part of the basic financial statements, is required by the Governmental Accounting Standards Board, who considers it to be an essential part of financial reporting for placing the basic financial statements in an appropriate operational, economic, or historical context. We have applied certain limited procedures to the required supplementary information in accordance with auditing standards generally accepted in the United States of America, which consisted of inquiries of management about the methods of preparing the information and comparing the information for consistency with management's responses to our inquiries, the basic financial statements, and other knowledge we obtained during our audit of the basic financial statements. We do not express an opinion or provide any assurance on the information because the limited procedures do not provide us with sufficient evidence to express an opinion or provide any assurance.

Prior Year Comparative Information

The financial statements include (partial or summarized) prior-year comparative information. Such information does not include all of the information required or sufficient detail to constitute a presentation in conformity with accounting principles generally accepted in the United States of America. Accordingly, such information should be read in conjunction with the government's financial statements for the year ended June 30, 2015, from which such partial information was derived.

Other Information

Our audit was conducted for the purpose of forming opinions on the financial statements that collectively comprise the Authority's basic financial statements. The introductory section, combining and individual fund financial statements and schedules, and statistical section are presented for purposes of additional analysis and are not a required part of the basic financial statements.

The combining balance sheet, schedule of revenues, expenditures and changes in fund balance, and original and final budget are the responsibility of management and were derived from and relate directly to the underlying accounting and other records used to prepare the basic financial statements. The information has been subjected to the auditing procedures applied in the audit of the basic financial statements and certain additional procedures, including comparing and reconciling such information directly to the underlying accounting and other records used to prepare the basic financial statements or to the basic financial statements themselves, and other additional procedures in accordance with auditing standards generally accepted in the United States of America. In our opinion, the combining and individual fund financial statements and schedules are fairly stated in all material respects in relation to the basic financial statements as a whole.

LSL
CPAs AND ADVISORS

To the Board of Directors
Orange County Fire Authority
Irvine, California

The introductory and statistical sections have not been subjected to the auditing procedures applied in the audit of the basic financial statements and, accordingly, we do not express an opinion or provide any assurance on them.

Other Reporting Required by *Government Auditing Standards*

In accordance with *Government Auditing Standards*, we have also issued our report dated September 30, 2016 on our consideration of the Authority's internal control over financial reporting and on our tests of its compliance with certain provisions of laws, regulations, contracts, and grant agreements and other matters. The purpose of that report is to describe the scope of our testing of internal control over financial reporting and compliance and the results of that testing, and not to provide an opinion on internal control over financial reporting or on compliance. That report is an integral part of an audit performed in accordance with *Government Auditing Standards* in considering the Authority's internal control over financial reporting and compliance.

Lance, Soll & Lunghard, LLP

Brea California
September 30, 2016

Orange County Fire Authority Safety Message

PulsePoint

Cardiac arrest is one of the leading causes of death, affecting hundreds of thousands of people in the United States each year. Effective cardio-pulmonary resuscitation (CPR), administered immediately after cardiac arrest, can increase a victim's chance of survival.

What Is PulsePoint?

Orange County Fire Authority has launched PulsePoint, a free mobile app that guides lifesaving CPR response for registered users within its service area. PulsePoint is designed for use by citizens and off-duty professionals trained in CPR. Informed at the same time as emergency responders, users are given detailed instructions, including the nearby locations of automated external defibrillators (AEDs). For more information on PulsePoint visit http://www.pulsepoint.org/pulsepoint-respond/.

Get Certified

- ✓ Contact the American Red Cross or the American Heart Association to get CPR certified.
- ✓ Maintain your certification by getting recertified when required.

Be a Life Saver

- ✓ PulsePoint is available on both the Apple App Store and the Google Play Store.
- ✓ Be notified when there is a cardiac emergency in your immediate vicinity. Your next rescue could be right around the corner.

Management's Discussion and Analysis

Fire Station 56 Grand Opening - July 2015

FIRE
ORANGE COUNTY
CALIFORNIA
AUTHORITY
Est. 1995

ORANGE COUNTY FIRE AUTHORITY
Management's Discussion and Analysis
Year ended June 30, 2016

As management of the Orange County Fire Authority (OCFA), we offer readers of OCFA's financial statements this overview and analysis of the financial activities for the fiscal year ended June 30, 2016.

Financial Highlights

Governmental Activities: OCFA's liabilities and deferred inflows of resources exceeded assets and deferred outflows of resources by $160,663,918 at the end of the current fiscal year. Net position consisted of net investment in capital assets totaling $187,910,677; restricted for capital projects and other purposes totaling $547,099; and an unrestricted deficit totaling $349,121,694. The result of current fiscal year operations caused total net position to decrease by $4,521,893 from the prior fiscal year.

Governmental Funds: As of the close of the current fiscal year, the OCFA's governmental funds showed combined ending fund balances totaling $209,370,885, an increase of $32,481,099 from the prior fiscal year. Of the total ending fund balance, $36,756,804 (17.6%) was available for funding future operational needs.

General Fund: At the end of the current fiscal year, total fund balance for the General Fund was $153,057,705, and was categorized as follows:

❖ Nonspendable	$ 36,779,845
❖ Restricted	13,867
❖ Committed	584,464
❖ Assigned	78,922,725
❖ Unassigned	36,756,804
Fund balance of the General Fund as of June 30, 2016	$153,057,705

Overview of the Financial Statements

This discussion and analysis is intended to serve as an introduction to OCFA's basic financial statements. The basic financial statements are comprised of the following three components: (1) government-wide financial statements, (2) fund financial statements, and (3) notes to the financial statements. This financial report also contains required and other supplementary information in addition to the basic financial statements.

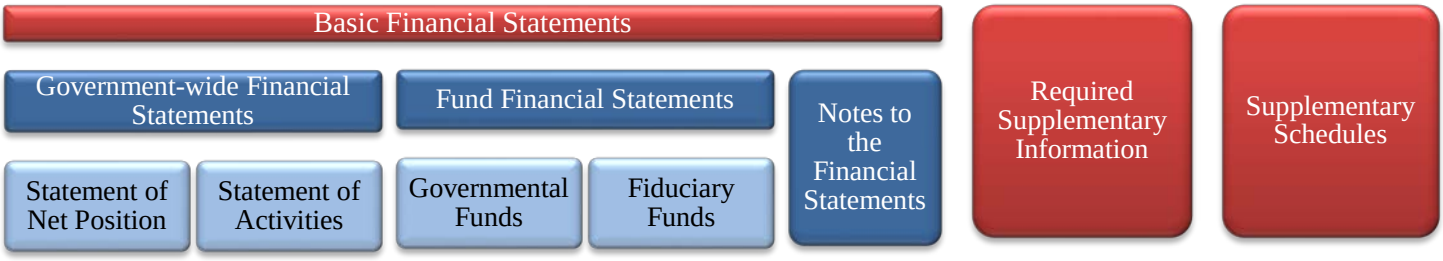

Government-wide Financial Statements: The government-wide financial statements are designed to provide readers with a broad overview of OCFA's finances, in a manner similar to a private-sector business. Public safety activities are reported as governmental activities, since they are principally supported by taxes and intergovernmental revenues. The government-wide financial statements can be found on pages 28-31.

Statement of Net Position: The statement of net position presents information on all of OCFA's assets, deferred outflows of resources, liabilities, and deferred inflows of resources, with the net differences reported as net position. Over time, increases or decreases in net position may serve as a useful indicator of whether the financial position of OCFA is improving or deteriorating.

Statement of Activities: The statement of activities presents information showing how OCFA's net position changed during the most recent fiscal year. All changes in net position are reported as soon as the underlying event giving rise to the change occurs, regardless of the timing of related cash flows. Thus, revenues and expenses are reported in this statement for some items that will only result in cash flows in future fiscal periods.

Fund Financial Statements: A fund is a grouping of related accounts that is used to maintain control over resources that have been segregated for specific activities or objectives. OCFA, like other state and local governments, uses fund accounting to ensure and demonstrate compliance with finance-related legal requirements. OCFA's funds can be divided into two categories – governmental funds and fiduciary funds.

Governmental Funds: Governmental funds are used to account for essentially the same functions reported as governmental activities in the government-wide financial statements. However, unlike the government-wide financial statements, governmental fund financial statements focus on near-term inflows and outflows of spendable resources, as well as on balances of spendable resources available at the end of the fiscal year. Such information may be useful in evaluating a government's near-term financing requirements. Because the focus of government funds is narrower than that of the government-wide financial statements, it is useful to compare the information presented for governmental funds with similar information presented for governmental activities in the government-wide financial statements. By doing so, readers may better understand the long-term impact of OCFA's near-term financial decisions. Both the governmental funds balance sheet and the governmental funds statement of revenues, expenditures and changes in fund balances provide reconciliations to facilitate this comparison.

OCFA reports four individual governmental funds. Information is presented separately in the fund financial statements for all four governmental funds, since OCFA has elected to classify all governmental funds as major funds. The OCFA adopts an annual appropriated budget for each governmental fund. Budgetary comparison statements and schedules have been provided for the governmental funds to demonstrate compliance with this budget. The basic governmental fund financial statements can be found on pages 34-42.

Fiduciary Funds: Fiduciary funds are used to account for resources held for the benefit of parties outside the government. Fiduciary funds are not reflected in the government-wide financial statements because the resources of those funds are not available to support OCFA's own programs. Combined basic fiduciary fund financial statements can be found on pages 43-44.

Notes to the Financial Statements and Required Supplementary Information (RSI): The notes and RSI provide additional information that is essential to a full understanding of the data provided in the government-wide and fund financial statements. The notes to the financial statements can be found on pages 45-92, while RSI can be found on pages 95-102.

Supplementary Schedules: The budgetary schedules referred to earlier in connection with governmental funds are presented in the supplementary schedules section. Combining and individual fund statements and schedules can be found on pages 104-115.

Government-wide Financial Analysis

Net Position: As noted earlier, net position may serve over time as a useful indicator of a government's financial position. In the case of OCFA, net position totaled a deficit of $160,663,918 at the end of the most recent fiscal year, a 5.0% improvement from the prior fiscal year. Following is a summary of the OCFA's net position as of June 30, 2016 and 2015:

ORANGE COUNTY FIRE AUTHORITY's Net Position

Governmental Activities	June 30, 2016	June 30, 2015	Increase (Decrease) Amount	Increase (Decrease) %
Assets:				
Current and other assets	$ 228,981,439	$ 208,723,950	$20,257,489	9.7%
Capital assets	194,021,124	199,246,842	(5,225,718)	-2.6%
Total assets	423,002,563	407,970,792	15,031,771	3.7%
Deferred outflows of resources:				
Related to pensions	139,040,544	85,763,924	53,276,620	6.2%
Total deferred outflows of resources	139,040,544	85,763,924	53,276,620	6.2%
Liabilities:				
Long-term liabilities	668,803,193	611,877,324	56,925,869	9.3%
Other liabilities	17,992,265	29,787,326	(11,795,061)	-4.0%
Total liabilities	686,795,458	641,664,650	45,130,808	7.0%
Deferred inflows of resources:				
Related to pensions	35,911,567	21,194,439	14,717,128	6.9%
Total deferred inflows of resources	35,911,567	21,194,439	14,717,128	6.9%
Net position:				
Net investment in capital assets	187,910,677	190,800,116	(2,889,439)	-1.5%
Restricted for capital projects	533,232	533,232	-	n/a
Restricted for other purposes	13,867	55,538	(41,671)	-0.8%
Unrestricted	(349,121,694)	(360,513,259)	11,391,565	3.2%
Total net position	$(160,663,918)	$(169,124,373)	$ 8,460,455	5.0%

- At June 30, 2016, the largest portion of OCFA's net position reflects its investment in capital assets, less related outstanding debt used to acquire those assets. OCFA uses these capital assets to provide services to citizens; consequently, these assets are not available for future spending. Although OCFA's investment in its capital assets is reported net of related debt, it should be noted that the repayment of any debt issued to acquire capital assets must be from other sources. OCFA cannot sell the assets to obtain funding.

- An additional portion of OCFA's net position represents resources that are subject to external restrictions on how they may be used. As of June 30, 2016, restricted net position relates to CALFIRE contract revenues that are legally restricted for new fire station development or improvements to existing fire stations, as well as donations received for specific programs and unperformed purchase orders for grant-funded programs.

- The remaining balance of net position is considered unrestricted. A positive unrestricted balance would represent amounts that may be used to meet OCFA's ongoing obligations to citizens and creditors. A deficit unrestricted balance, as reported on June 30, 2016 and June 30, 2015, indicates that OCFA's obligations (liabilities and deferred inflows of resources) currently exceed its resources (assets and deferred outflows of

resources). This deficit is due to the implementation of Governmental Accounting Standards Board (GASB) Statement No. 68 during Fiscal Year 2014/15, which required that OCFA begin reporting its net pension liabilities on the Statement of Net Position. Although the situation surrounding OCFA's pension plans did not change, the way in which they are accounted for and reported in the financial statements changed based on the new guidance provided in GASB Statement No. 68.

Changes in Net Position: Governmental activities increased OCFA's net position by $8,460,455 during the most recent fiscal year, an indication that OCFA's financial position has improved. As previously noted, the reason for the overall deficit in net position is due to a change in financial reporting requirements under GASB Statement No. 68, not the result of a change in OCFA's financial situation.

Governmental activities are divided into two categories – program and general. Program revenues are those derived directly from a government program itself, or from parties outside the government's taxpayers, and thus reduce the net cost of providing that program. Any program expenses that are not offset by program revenues must essentially be financed by general revenues, such as taxes and investment earnings. Following is a summary of OCFA's changes in net position for Fiscal Year 2015/16 and Fiscal Year 2014/15, followed by explanations for the increases or decreases in revenues and expenses between fiscal years.

ORANGE COUNTY FIRE AUTHORITY's Changes in Net Position

			Increase (Decrease)	
Governmental Activities	June 30, 2016	June 30, 2015	Amount	%
Program revenues:				
Charges for services	$ 117,263,679	$ 113,150,325	$ 4,113,354	3.6%
Operating grants and contributions	12,165,015	11,410,019	754,996	6.6%
Capital grants and contributions	3,331,088	9,182,195	(5,851,107)	-63.7%
Total program revenues	132,759,782	133,742,539	(982,757)	-0.7%
General revenues:				
Property taxes	219,840,417	205,141,237	14,699,180	7.2 %
Investment income	1,654,065	839,864	814,201	96.9%
Gain on sale of capital assets	6,000	63,953	(57,953)	-90.6%
Miscellaneous	2,823,503	1,235,004	1,588,499	128.6%
Total general revenues	224,323,985	207,280,058	17,043,927	8.2%
Total revenues	357,083,767	341,022,597	16,061,170	4.7%
Public safety expenses:				
Salaries and benefits	316,292,785	335,419,737	(19,126,952)	-5.7%
Services and supplies	35,127,573	46,073,201	(10,945,628)	-23.8%
Depreciation and amortization	9,267,982	9,050,195	217,787	2.4%
Interest on long-term debt	917,320	582,565	334,755	57.5%
Total expenses	361,605,660	391,125,698	(29,520,038)	-7.5%
Change in net position	(4,521,893)	(50,103,101)	45,581,208	
Net position, beginning of year	(169,124,373)	243,754,615	(412,878,988)	
Prior period adjustment	12,982,348	(362,775,887)	375,758,235	
Net position, end of year	$(160,663,918)	$(169,124,373)	$8,460,455	5.0%

Revenues of Governmental Activities - by Source
Fiscal Year 2015/16

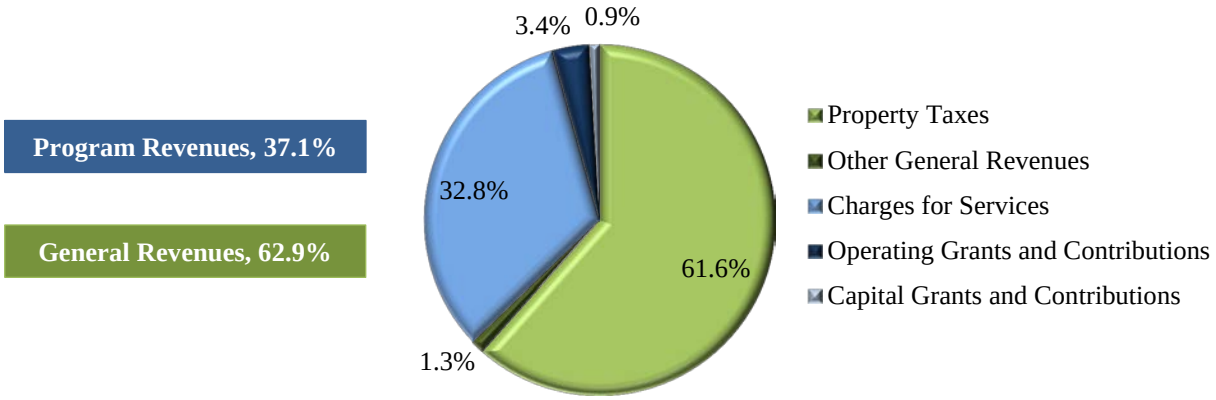

Program revenues, which totaled $132,759,782 for Fiscal Year 2015/16 and accounted for 37.1% of total revenues, decreased by $982,757 (0.7%) from the prior fiscal year. Following is a description of each program revenue type, followed by an explanation of what contributed to the net increase or decrease from the prior fiscal year.

- Charges for services include amounts received from those who purchase, use, or directly benefit from or are affected by a program. These revenues increased by $4,113,354 (3.6%) over the prior fiscal year.

Amount	Reason for Increase / Decrease
+$2,870,000	Fire service contracts increased for cash contract city charges per terms of the Joint Powers Agreement (+$2.53 million); OCFA's contract with California Department of Forestry (CALFIRE) for the protection of State Responsibility Area (SRA) lands (+$210,000); and the Airport Rescue Firefighting (ARFF) Services contract with John Wayne Airport, per terms of an amended contract that went into effect in December 2012 (+$130,000). The increase in cash contract city contract revenues includes accrual-based adjustments for revenues from the City of Santa Ana to reimburse OCFA for usage of employee general leave balances.
+$2,205,000	Reimbursements for state and federal incidents vary each year depending on fire and emergency response activity. State assistance by hire services performed for CALFIRE and the California Emergency Management Agency (CAL EMA) increased by $2.5 million. Reimbursements for state incidents were higher in the current fiscal year due to major Fiscal Year 2015/16 incidents such as the Butte Fire in September 2015. Federal assistance by hire services performed for Cleveland National Forest decreased by $315,000 primarily due to the Fiscal Year 2014/15 Silverado Fire in September 2014. Federal responses to national incidents increased by $20,000 due to responses in Fiscal Year 2015/16 for Hurricane Joaquin in October 2015 and Tropical Cyclone Amos in April 2016 .
-$435,000	Fee-based fire prevention revenues decreased primarily due to permit activity for residential site reviews; a reduction in the fire sprinkler system plan review fee effective September 2015; and a delay in the number of assembly inspections completed in the current fiscal year.
-$420,000	Revenues for ambulance transport and supplies reimbursement were lower in Fiscal Year 2015/16 due to a decline in transport activity.
-$105,000	Road maintenance, fuel reduction, and other contract revenues generated by the hand crew decreased due to a decline in the amount of work performed for Southern California Edison.
+$4,115,000	**Program Revenues: Charges for Services – Net Increase**

- Operating grants and contributions include grants, contributions, donations, and similar items that are restricted to one or more specific program. These revenues increased by $754,996 (6.6%) from the prior fiscal year.

Amount	Reason for Increase / Decrease
+$390,000	Tax increment passed through from member cities decreased by $270,000, but one-time tax increment passed through from the County of Orange increased by $660,000. In Fiscal Year 2011/12, the State of California dissolved its sixty year-old redevelopment program, and city redevelopment agencies were replaced with successor agencies to manage the wind-down of the program. Property tax increment that was formerly passed through to OCFA by various member cities has now been deposited into the newly formed Redevelopment Property Tax Trust Fund, from which the County of Orange Auditor/Controller makes disbursements.
+$480,000	Federal and state operating grants and other reimbursable revenues increased primarily due to three one-time revenue sources that were new in Fiscal Year 2015/16: • $160,000 federal grants passed through the Orange County Sherriff's Department and the City of Santa Ana for development of wildland urban interface pre-fire plans; • $100,000 reimbursement from the California Fire and Rescue Training Authority Task Force for costs incurred during a task force deployment exercise conducted in May 2016; and • $40,000 state grant from CAL FIRE via the State Responsibility Fire Prevention Fund for the development of a county-wide wildfire protection plan. In addition, annual federal grants that increased in Fiscal Year 2015/16 included the Homeland Security Grant Program passed through the Orange County Sheriff's Department for regional training costs ($25,000), and the Urban Search and Rescue (USAR) Cooperative Agreement via the Federal Emergency Management Agency to fund operations of California Task Force 5 ($155,000).
-$115,000	Other miscellaneous operating revenues decreased, primarily due to a decline in the number of reimbursable instructional hours per a contract with Santa Ana College, as well as a decline in the number of projects submitted for reimbursement from the California Joint Apprenticeship Committee.
+$755,000	**Program Revenues: Operating Grants and Contributions – Net Increase**

- Capital grants and contributions include grants, contributions, donations, and similar items that are restricted to one or more specific capital-related programs. These revenues decreased by $5,851,107 (63.7%) from the prior fiscal year.

Amount	Reason for Increase / Decrease
-$5,075,000	Revenues from developers decreased per the terms of various Secured Fire Protection Agreements. During Fiscal Year 2014/15, OCFA received over $4.5 million from various developers as reimbursement for construction of new Fire Station No. 56 (Village of Sendero) in Rancho Mission Viejo, as well as a new type 1 engine to be placed into service at the station. Contributions varied between the prior and current fiscal years based on construction projects in the cities of Irvine, Aliso Viejo, Mission Viejo, Lake Forest, and Yorba Linda, resulting in a net $575,000 increase.
-$795,000	Revenues from federal capital grants decreased by $795,000. A Community Development Block Grant project for improvements at four fire stations in the City of Santa Ana was completed in April 2015, resulting in an $825,000 decrease to capital-related federal grant reimbursements. During Fiscal Year 2014/15, OCFA also received a $10,000 Homeland Security Grant passed through the Orange County Sheriff's Department for the purchase of gas monitors. During Fiscal Year 2015/16, OCFA received a $40,000 Assistance to Firefighters grant for the purchase of vehicle extrication gloves.
+$20,000	Capital assets contributed to OCFA increased primarily due to various equipment items purchased by other government agencies via the federal Urban Area Security Initiative (UASI) grant. During Fiscal Year 2015/16, the City of Anaheim and the City of Santa Ana acquired and contributed to OCFA two search cameras and three mobile radios valued at $45,000. During Fiscal Year 2014/15, the City of Santa acquired and contributed two chemical agent detection kits valued at $35,000. In addition, during Fiscal Year 2015/16 the Orange County Fire Authority Foundation acquired and contributed to OCFA the Pulsepoint software system that had been purchased for $10,000 with a grant from Hoag Hospital.
-$5,850,000	**Program Revenues: Capital Grants and Contributions – Net Decrease**

General revenues, which totaled $224,323,985 for Fiscal Year 2015/16 and accounted for 62.9% of total revenues, increased by $17,043,927 (8.2%) over the prior fiscal year. Following is a description of each general revenue type and an explanation of what contributed to the net increase or decrease from the prior fiscal year.

<table>
<tr><th>Amount</th><th>Reason for Increase / Decrease</th></tr>
<tr><td>+$14,700,000</td><td>The largest general revenue, property taxes, increased by $14,699,180 (7.2%) over the prior fiscal year, primarily due to increases in secured property taxes.</td></tr>
<tr><td>+$1,590,000</td><td>Miscellaneous revenues increased by $1,588,499 (128.6%), primarily relating to amounts received in Fiscal Year 2015/16 from the Orange County Professional firefighters Association IAFF Local 3631 in connection with the contract governing OCFA's contributions to the firefighter medical trust, which pays monthly health care premiums for employees in the firefighter unit. Other Fiscal Year 2015/16 increases pertained to SB90 claims reimbursed from the State of California and bankruptcy proceeds from the County of Orange. These revenue sources vary from year to year.</td></tr>
<tr><td>+$810,000</td><td>Investment income increased by $814,201 (96.9%). OCFA's year-to-date effective rate of return on its investment portfolio was 0.47% as of June 30, 2016, as compared to 0.27% as of June 30, 2015. This 74.0% increase in the annual rate of return attributed to approximately $390,000 of the increase in overall interest earnings. In addition, OCFA adjusts its investments to market value as of June 30 each year. This resulted in an overall investment gain in Fiscal Year 2015/16, and attributed to approximately $50,000 of the increase in total investment income as compared to the prior fiscal year's market value gain. The market value adjustment is a "paper only" transaction, and no actual investment gains or losses have been recognized since OCFA typically holds its investments to maturity. Finally, during Fiscal Year 2015/16 OCFA issued short-term debt in the form of Tax and Revenue Anticipation Notes (TRAN), which generated a premium that was approximately $330,000 higher than the prior fiscal year's TRAN premium. These components of investment income are summarized below:
<table>
<tr><th></th><th>FY 2015/16</th><th>FY 2014/15</th><th>Increase (Decrease)</th></tr>
<tr><td>Portfolio earnings</td><td>$ 843,479</td><td>$450,815</td><td>$392,664</td></tr>
<tr><td>Market value gain (loss)</td><td>125,018</td><td>74,731</td><td>50,287</td></tr>
<tr><td>TRAN premium</td><td>612,431</td><td>275,880</td><td>336,551</td></tr>
<tr><td>Interest on property taxes</td><td>73,137</td><td>38,438</td><td>34,699</td></tr>
<tr><td>Total investment income</td><td>$1,654,065</td><td>$839,864</td><td>$814,201</td></tr>
</table></td></tr>
<tr><td>-$60,000</td><td>Gain on sale of capital assets decreased by $57,953 (90.6%), primarily due to a decline in the number of vehicles and equipment items sold at public auction. During Fiscal Year 2014/15, twelve vehicles and fifteen equipment items were sold, including a fully-depreciated dozer and loader that sold for a combined $53,000. During Fiscal Year 2015/16, only six vehicles were sold for a combined $10,000.</td></tr>
<tr><td>+$17,040,000</td><td>General Revenues – Net Increase</td></tr>
</table>

Expenses of Governmental Activities - by Type
Fiscal Year 2015/16

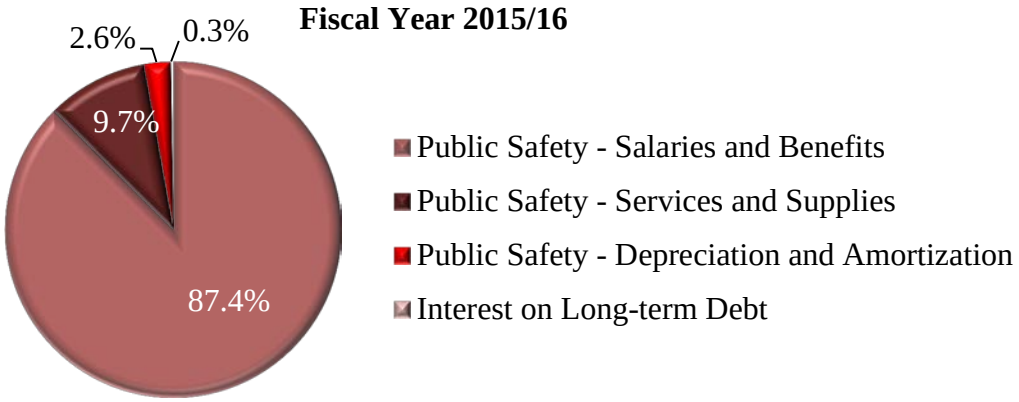

Total expenses decreased by $29,520,038 (7.5%) from the prior fiscal year. Following is an explanation of what contributed to the net increase or decrease of each expense type from the prior fiscal year.

- Salaries and benefits decreased by $19,126,952 (5.7%) from the prior fiscal year.

Amount	Reason for Increase / Decrease
-$32,640,000	Retirement costs for contributions remitted to the Orange County Employees Retirement System (OCERS) decreased by $4,840,000. Reasons for the decrease in actual plan contributions are further explained in the ***Major Governmental Funds – General Fund*** portion of this Management's Discussion and Analysis. In addition, under the requirements of GASB Statement No. 68, the amount of pension expense recognized during Fiscal Year 2015/16 in order to fully capture OCFA's share of the net pension liability and related pension expense in its governmental activities, was $27.8 million less than the prior fiscal year.
+$13,290,000	Reasons for increases and decreases to the following categories of salaries and benefits are further explained in the ***Major Governmental Funds – General Fund*** portion of this Management's Discussion and Analysis: overtime costs (+6,340,000); regular pay (+2,840,000); employee health insurance and other benefits (+$2,680,000); other pay (+$1,720,000); and vacation and sick leave payouts (-$315,000). In addition, salaries and benefits reported in the governmental activities were reduced by $25,000 in Fiscal Year 2014/15 to reflect employee labor costs that were capitalized as part of the Computer Aided Dispatch (CAD) system that went into service in September 2014.
+$600,000	The net change in long-term liabilities for various employee leave balances increased by $600,000 as compared to the prior fiscal year, and is recognized as an expense in the governmental activities. The net increase is primarily related to a decline in the use of sick leave balances by employees.
-$375,000	Other post-employment benefit (OPEB) cost for the defined benefit Retiree Medical Plan decreased by $375,000. Annual OPEB cost is equal to an annual required contribution, as determined by an actuarial valuation, plus adjustments for cumulative interest and actual contributions to the plan. An updated actuarial study is completed every other year.
-$19,125,000	**Salaries and Benefits – Net Decrease**

- Services and supplies decreased by $10,945,628 (23.8%) from the prior fiscal year.

Amount	Reason for Increase / Decrease
-$7,005,000	In September 2013, the Board of Directors approved issuance of equity payments from unrestricted revenue sources to qualifying Structural Fire Fund member agencies, based on a calculation of average Structural Fire Fund Tax rate. Equity payments totaling $7,005,000 were paid or accrued in the prior fiscal year in accordance with the 2nd Amendment to the Joint Powers Agreement. However, no equity payments were paid or accrued in Fiscal Year 2015/16 because the 2nd Amendment to the Joint Powers Agreement was nullified by the court.
-$5,330,000	OCFA's long-term liability for workers' compensation reflects the present value of estimated outstanding losses, as determined by an actuarial valuation and the "confidence level" set by the Board of Directors. The change in the actuarial liability estimate, plus actual cash claims paid, is recognized as an expense. Workers' compensation expense decreased as follows:

	FY 2015/16	FY 2014/15	Increase (Decrease)
Actual claims paid	$ 7,890,000	$ 6,450,000	$ 1,440,000
Change in actuarial estimate	(1,165,000)	5,605,000	(6,770,000)
Total fiscal year expense	$6,725,000	$12,055,000	$(5,330,000)

(Continued on next page)

Amount	Reason for Increase / Decrease
(Continued) +$955,000	Equipment and vehicle maintenance expense includes all costs necessary to support, maintain and repair OCFA's communications and information systems; its fleet of frontline and support vehicles and four helicopters; and various other equipment utilized throughout the organization. Expenses increased during Fiscal Year 2015/16 primarily due to support for the new Computer Aided Dispatch (CAD) system that went live in September 2014. OCFA was not required to begin paying annual support costs to the third party software provider until September 2015. Additional reasons for the increase to equipment and vehicle maintenance are further explained in the ***Major Governmental Funds – General Fund*** portion of this Management's Discussion and Analysis.
+$705,000	Clothing and personal supply expense includes all costs necessary to outfit frontline and support personnel, and includes items such as uniforms, boots, helmets, gloves, turnouts, brush pants and coats, goggles, fire hoods, and specialty personal protective equipment. Expenses increased during Fiscal Year 2015/16 due to a high volume of uniform orders submitted by field personnel, as well as an increase in the number of new firefighter recruits as compared to the prior fiscal year. A more detailed explanation is included in the ***Major Governmental Funds – General Fund*** portion of this Management's Discussion and Analysis.
-$500,000	OCFA's facilities include seventy-two fire stations, a new Urban Search and Rescue warehouse, and the Regional Fire Operations and Training Center (RFOTC). The total cost to keep these facilities repaired and in efficient operating condition decreased, primarily due to a significant grant-funded project to remodel four city-owned fire stations in the City of Santa Ana during Fiscal Year 2014/15. In the absence of that one-time project, building maintenance expenses actually increased by approximately $325,000. Maintenance costs varied by location, but overall OCFA's expenses increased due to repairs of flooring, doors and gates, roofing, and landscaping. In addition, during Fiscal Year 2015/16 there was an increase in non-capitalized costs needed to make new Fire Station No. 56 (Village of Sendero) ready for operations.
+$230,000	Reasons for increases and decreases to the following categories of services and supplies are further explained in the ***Major Governmental Funds – General Fund*** portion of this Management's Discussion and Analysis: transportation (-$350,000); special department expenses (+235,000); employee travel, training, and meetings (+$205,000); medical, dental, and lab supplies (+$190,000); insurance (-$80,000); food (+$75,000); and utilities and communications (-$45,000).
-$10,945,000	**Services and supplies – Net Decrease**

- Depreciation and amortization expense, which had no impact on OCFA's cash balances, increased by $217,787 (2.4%), and pertained primarily to depreciation on buildings. Fiscal Year 2015/16 was the first full year of depreciation expense for two significant building additions – the Urban Search and Rescue warehouse acquired in April 2015 and Fire Station No. 56 (Village of Sendero) placed into service in July 2015.

- Interest on long-term debt increased by $334,755 (57.5%) from the prior fiscal year. Interest expense on the 2008 helicopter lease purchase agreement decreased by approximately $60,000 as principal was paid down per the debt-to-maturity schedule. This was offset by an increase totaling approximately $400,000 for interest on Tax and Revenue Anticipation Notes (TRAN) issued during Fiscal Year 2015/16.

Financial Analysis of OCFA's Funds

Governmental Funds: As noted earlier, the OCFA uses fund accounting to ensure and demonstrate compliance with finance-related legal requirements. The focus of the OCFA's governmental funds is to provide information on near-term inflows, outflows, and balances of spendable resources. Such information is useful in assessing the OCFA's financing requirements. Fund balance is divided into the following five categories:

Category	Description
Nonspendable	Not in a spendable form, or legally or contractually required to remain intact
Restricted	Subject to externally enforceable legal restrictions
Committed	Use is constrained by specific limitations that the Board of Directors imposes upon itself
Assigned	Intended to be used by the government for specific purposes, as established by the governing body itself
Unassigned	Residual amounts in the General Fund available for any purpose (may serve as a useful measure of a government's net resources available for funding future operational needs)

At the end of Fiscal Year 2015/16, OCFA's governmental funds reported combined ending fund balances of $209,370,885, an increase of $32,481,099 in comparison with the prior fiscal year. Approximately 17.6% constitutes unassigned fund balance, which is available for spending for any purpose. The remaining 82.4% of fund balance is not available for spending on any new purpose, because it has already been restricted, committed, or assigned for specific purposes, or it is in a nonspendable form.

Fund Balances of Governmental Funds

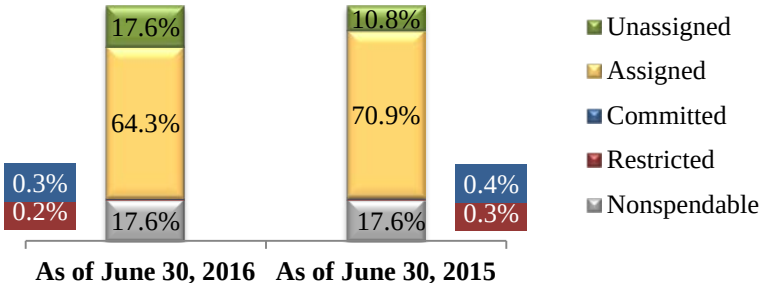

Major Governmental Funds: If the assets, liabilities, revenues, or expenditures of a governmental fund exceed 10% of the total of all governmental funds, that fund is reported as a major governmental fund in the fund financial statements. Because OCFA has elected to classify all of its governmental funds as major, regardless of the calculation, four major funds are reported during the current fiscal year. Following is a description of the changes in each fund's revenues, expenditures, and transfers from the prior to the current fiscal year, and how those changes impacted net fund balance. Increases to revenues and transfers impact fund balance positively, while increases to expenditures and transfers out impact fund balance negatively.

The ***General Fund*** is the chief operating fund of the OCFA. At the end of Fiscal Year 2015/16, the General Fund's fund balance totaled $153,057,705. Unassigned fund balance totaling $36,756,804 (24.0%) is available for future spending. The remaining $116,300,901 (76.0%) is not available for spending on any new purpose, because it has already been restricted, committed or assigned for specific purposes, or is in a nonspendable form.

Total fund balance of the OCFA's General Fund increased by $19,802,100 during the current fiscal year. The prior fiscal year's fund balance increased by $4,768,968, a difference of $15,033,132.

Impact on Fund Balance	Description
+$14,700,000	Revenue from property taxes increased primarily due to secured property taxes.
+$2,410,000	The most significant increase in intergovernmental revenue was state assistance by hire revenues for increased emergency response activity, including the Butte Fire in September 2015. Other increases included SB90 claims reimbursed from the State of California; contract revenues for the protection of State Responsibility Area (SRA); miscellaneous state and federal revenues; and tax increment passed through from member cities and the County of Orange. These increases totaled $3.2 million, but were offset by $800,000 in decreases relating to Fiscal Year 2014/15 federal assistance by hire emergency response activity and federal grants, including a Community Development Block Grant to remodel various Santa Ana fire station kitchens and bathrooms.
+$1,790,000	The most significant increases in charges for services were for operating and facilities charges to cash contract cities per terms of the Joint Powers Agreement and the Airport Rescue Firefighting (ARFF) Services contract with John Wayne Airport. These increases totaled nearly $2.8 million, but were offset by nearly $1 million in decreased revenues for ambulance transport and supplies reimbursements; permit and inspection fees; and contract work generated by the hand crew.
+$975,000	The increase in miscellaneous revenue was primarily due to amounts received from the Orange County Professional Firefighters Association IAFF Local 3631 in connection with OCFA's contract governing contributions to the firefighter medical trust, which pays monthly health care premiums for employees in the firefighter unit.
+$700,000	The most significant increases in use of money and property pertained to the premium for the Fiscal Year 2015/16 TRAN issuance (+$335,000). Other increases included investment portfolio earnings and the increase in market value investment gain allocated to the fund (+$330,000), as well as interest earnings related to property taxes (+$35,000).
+$20,575,000	***Subtotal – Impact of Revenues***
-$6,340,000	Overtime costs increased by over $6.3 million, which included non-discretionary backfill for open/vacant suppression positions; overtime and backfill for suppression personnel responding to emergency incidents; and backfill for suppression personnel on workers' compensation or those utilizing leave balances. The overall increase in overtime was attributed to a new Memorandum of Understanding (MOU) with the firefighter unit that went into effect in November 2014, which changed the way in which sick and vacation hours count toward hours work when calculating overtime. In addition, the number of emergency response hours increased by nearly 30,000 hours due to a higher volume of out-of-county incidents in Fiscal Year 2015/16.
+$4,840,000	Retirement costs had a net decrease due to one-time employer contributions made toward the net unfunded pension liability (-$5.9 million); pension contributions based on changes to employee compensation negotiated during Fiscal Year 2014/15, net of a decline in the annual savings achieved by pre-paying a portion of the subsequent fiscal year's contributions to OCERS (+$1.1 million); and additional payments made toward the unfunded pension liability during Fiscal Year 2014/15, which was achieved by carrying forward the higher safety member retirement rates from Fiscal Year 2012/13 (-$100,000). OCFA made one-time employer contributions toward the net unfunded pension liability totaling $21.3 million in Fiscal Year 2014/15, as compared to $15.4 million in Fiscal Year 2015/16.
-$2,840,000	An increase in regular pay was due primarily to labor contracts negotiated with the firefighter unit and the general and supervisory management unit during Fiscal Year 2014/15, which resulted in 2.0% and 2.75% base salary increases, respectively.
-$2,680,000	Employee health insurance and other benefits increased primarily due to firefighter health insurance premiums. Monthly rates per employee increased from $1,742 to $1,900 effective January 1, 2016.
-$1,720,000	Other pay – which includes pay to employees on workers' compensation, educational incentives, paramedic/EMT bonuses, bilingual pay, and other specialty pay – increased in the following areas: ***(Continued on next page)***

Impact on Fund Balance	Description
(Continued)	➢ Workers' compensation pay +$490,000 ➢ Paramedic specialty pay +$440,000 ➢ Special assignment pay for training officers +$225,000 ➢ Education incentives +$180,000 ➢ Bilingual pay +$115,000 ➢ Special assignment pay for hazmat specialists and technical rescue trucks +$100,000 ➢ Miscellaneous taxable pay +$90,000 ➢ Special assignment "on call" pay +$80,000 The number of employees on workers' compensation for all or a portion of the year increased from 179 in Fiscal Year 2014/15 to 206 in Fiscal Year 2015/16, attributing nearly $500,000 to the overall increase in other pay. Paramedic specialty pay, which is calculated at 15% of regular pay, was another significant contributor to the overall increase. This specialty pay increased by over $400,000 because of increases in employee compensation that were negotiated during Fiscal Year 2014/15, as well as various unit reconfigurations in 2015 and 2016 that increased the number of paramedic post positions.
+$315,000	Vacation and sick leave payouts decreased primarily due to the retirement of several long-term personnel during Fiscal Year 2014/15.
-$8,425,000	***Subtotal – Impact of Salaries and Benefits***
+$6,990,000	The decrease in miscellaneous expenditures relates primarily to equity payments due to the County of Orange and the cities of Irvine, Rancho Santa Margarita, Laguna Woods, and Lake Forest in Fiscal Year 2014/15 (+$7,005,000). These payments were made in the prior fiscal year in accordance with the 2nd Amendment to the Joint Powers Agreement, which was nullified by the appellate court during Fiscal Year 2015/16. No equity payments were paid or accrued in Fiscal Year 2015/16. In addition, the General Fund temporarily borrowed $10 million and $5 million during Fiscal Year 2015/16 and Fiscal Year 2014/15, respectively, resulting in an increase in interfund interest expenditures (-$15,000).
-$1,470,000	The most significant increase in professional services pertained to workers compensation claims paid, which increased by over $1.4 million in Fiscal Year 2015/16. Other increases related to the development of thirty-two wildland urban interface pre-fire plans, and the annual partnership costs paid for the 800 MHz Countywide-Coordinated Communications System (CCCS) replacement. These increases totaled approximately $1.7 million, but were partially offset by decreases for support and maintenance of the intranet/internet calendaring project that was completed in the prior fiscal year.
-$955,000	Equipment and vehicle maintenance was higher in Fiscal Year 2015/16 primarily due to support for the Computer Aided Dispatch (CAD) system. The new OCFA-wide CAD system went live in September 2014; however, annual support and maintenance costs were not required to be paid to the third party software provider for the first full year while in the initial warranty period. Other costs that were higher in Fiscal Year 2015/16 included outsourcing of various repairs for vehicles that were in accidents; replacement of vehicle tires; various equipment system repairs at the Regional Fire Operations and Training Center (RFOTC), including the HVAC system, fire sprinkler system, generator, and fuel pumps; and ongoing maintenance and upgrade support for the Banner financial system and database.
-$705,000	Clothing and personal supply costs increased primarily due to purchases of new uniforms and boots. In the prior fiscal year, many suppression personnel delayed replacing their uniforms in anticipation of a new uniform contract that was awarded in June 2015. Thus, a high volume of uniform orders were placed and filled in Fiscal Year 2015/16. In addition, new uniforms were purchased for firefighters in two academies held during Fiscal Year 2015/16, as opposed to only one academy held in the prior fiscal year. ***(Continued on next page)***

Impact on Fund Balance	Description
(Continued) **+$515,000**	Decreases in building maintenance were attributed primarily to certain significant Fiscal Year 2014/15 projects, including a grant-funded kitchen and bathroom remodel at four fire stations in the City of Santa Ana and a hardscape remodel project at Fire Station No. 8 (Skyline). These decreases totaled approximately $880,000, but were offset by increases in other maintenance costs at fire stations and the RFOTC for flooring; doors and gates; roofing; and landscaping.
+350,000	Transportation costs decreased due to an overall drop in fuel prices (+$350,000). Fiscal Year 2014/15 fuel prices averaged $2.84 and $2.93 per gallon for diesel and regular, respectively. Fiscal Year 2015/16 fuel prices were 15-28% lower with an average price of $2.04 and $2.48 per gallon for diesel and regular, respectively. The average price per gallon for jet fuel to replenish the helicopter fuel tank also decreased 15% from $3.09 per gallon in Fiscal Year 2014/15 to $2.64 per gallon in Fiscal Year 2015/16.
-$235,000	Increases in special department expenditures pertained primarily to the purchase of forty-three portable VHF radios, twelve mobile VHF radios, and related accessories during Fiscal Year 2015/16. Other significant costs in the current fiscal year included employee tuition reimbursements, supplies for the WEFIT health and wellness program, incident management team cache items, support of the drowning prevention task force, and various miscellaneous purchases made throughout the organization.
-$205,000	The cost of employee travel, training, and meetings increased primarily due to the new OCFA-wide "Crucial Conversations" program which began in Fiscal Year 2015/16. Other significant in-county costs included an S420 training class sponsored by the Urban Search and Rescue (USAR) task force, as well as on-site Banner financial system training for employees in Finance, Purchasing, Budget, and Human Resources. There was also an increase in the number of out-of-county trips completed by the Training & Safety Services section and those in the USAR program.
-$190,000	More medical, dental, and lab supplies were purchased in Fiscal Year 2015/16, including pharmaceuticals, catheters, defibrillator supplies, and needles. Purchases of these supplies vary each year as stock is replenished and expiring pharmaceuticals are replaced.
+$80,000	The cost of insurance premiums for excess workers' compensation and general liability coverage decreased during Fiscal Year 2015/16.
-$75,000	Food costs were higher in Fiscal Year 2015/16 due to the purchase of box lunches for significant in-county fire incidents, including the Laguna Fire in June 2016; replenishment of MRE stock ("meals-ready-to-eat"); new drip-drop hydration mix placed on all fire apparatus; and various food costs needed to conduct two firefighter academies as opposed to only one academy in the prior fiscal year.
+$45,000	A net decrease in utilities and communications charges was primarily due to declining electricity rates, offset by an increase in the monthly communications charges to operate all fax machines, phones, alarms, 911 boxes, and data circuits throughout OCFA.
+$4,145,000	***Subtotal – Impact of Services and Supplies***
+$80,000	Capital outlay varies each fiscal year based on organizational needs for new and replacement equipment. Significant equipment purchases in Fiscal Year 2014/15 included two servers, a helicopter hoist, seven extrication tools, a portable restroom facility, and twelve portable 800 MHz radios. The most significant purchases in Fiscal Year 2015/16 included three servers, thirteen mobile radios, six mobile vehicle lift systems, a compressor, three network switches, and four routers. In addition, the purchase and installation of various Code 3 equipment onto type 1 engines and Battalion Chief vehicles increased during Fiscal Year 2015/16.
-$400,000	Interest and fiscal charges increased due to the issuance of Tax and Revenue Anticipation Notes (TRAN). The coupon rate on the Fiscal Year 2015/16 TRAN issuance was 2.00%, as compared to 0.75% for the Fiscal Year 2014/15 TRAN. ***(Continued on next page)***
-$4,600,000	***Subtotal – Impact of Expenditures***

Impact on Fund Balance	Description
(Continued) **-$920,000**	Net interfund transfers increased and decreased as follows: ➢ Transfers are made from the General Fund to the capital projects funds to fund current and future projects in the Capital Improvement Program. Transfers from the General Fund to the Communications and Information Systems Fund decreased during Fiscal Year 2015/16 (+$2,925,000). ➢ When the *Capital Projects Fund Policy* was implemented in Fiscal Year 2014/15, certain projects within the Capital Improvement Program were moved from the Communications and Information Systems Fund and the Facilities Maintenance and Improvement Fund (now closed) to the General Fund, resulting in one-time transfers in to the General Fund during Fiscal Year 2014/15 (-$1,135,000 and -$2,710,000, respectively).
-$110,000	There was a decrease in the proceeds from sale of capital and other assets, primarily due to the sale of a dozer, a loader, a fire command bus, and a type 1 engine during Fiscal Year 2014/15.
+$90,000	Insurance recoveries increased in Fiscal Year 2015/16 due to property damage incurred at Fire Station No. 22 (Laguna Hills/Laguna Woods) and Fire Station No. 75 (Santa Ana), as well as an increase in the number of accidents involving OCFA vehicles.
-$940,000	***Subtotal – Impact of Other Financing Sources and Uses***
+$15,035,000	**General Fund – Net Impact on Fund Balance**

The ***Communications and Information Systems Fund*** had total fund balance of $19,002,272 at the end of Fiscal Year 2015/16. Fund balance was assigned to the Capital Improvement Program ($18,977,557) and communications and information technologies projects ($24,715). Total fund balance increased by $346,417 during the current fiscal year. The prior fiscal year's fund balance increased by $604,103, a difference of $257,686.

Impact on Fund Balance	Description
+$50,000	Revenues for use of money and property increased due to portfolio earnings and the market value investment gain allocated to the fund.
+$60,000	Miscellaneous revenues pertaining to bankruptcy proceeds increased during Fiscal Year 2015/16.
+$1,420,000	Expenditures for services and supplies and capital outlay had a net decrease primarily due to four significant, multi-year capital improvement projects as follows: ➢ The development of a new Computer Aided Dispatch (CAD) system began in Fiscal Year 2011/12 and was placed in service September 2014. Fiscal Year 2014/15 project costs included the final project milestones necessary to place the new system into service, including the acquisition of hardware and related warranty costs; system design; coding; data development (-$810,000). ➢ The Fire Station Alerting System project was a component of the overall CAD public safety system project. The project began in Fiscal Year 2013/14 and was placed in service July 2015. Fiscal Year 2014/15 project costs were higher than the current fiscal year since a significant number of project milestones were completed and costs were incurred at the peak of the project's activity, including hardware and software installation at various fire stations; a radio interface controller; installation of turnout timers; and system integration (-$625,000). ***(Continued on next page)***

Impact on Fund Balance	Description
(Continued)	➢ The Regional Fire Operations and Training Center (RFOTC) Audio Visual Upgrade project consists of the upgrade and replacement of various audio visual equipment used in the RFOTC board room and classroom one (Phase 1) and classrooms two through five (Phase 2). The project includes the purchase and installation of mixing boards, microphones, projectors, computers, controllers, and cabling; the addition of video teleconferencing capabilities; and an automated voting system for the board room. Phase 1 began in Fiscal Year 2015/16 and is expected to be completed during Fiscal Year 2016/17. Costs incurred thus far have included hardware acquisition and system design (+100,000). ➢ The MDC and Mobile Data Network Upgrade project consisted of the purchase of approximately 350 modems and their subsequent installation onto fire apparatus over the course of three fiscal years. Fiscal Year 2014/15 project costs included professional installation costs incurred for the final completion of the project (-$85,000).
-$1,790,000	Net transfers in and out of the General Fund funds decreased as follows: ➢ Transfers in from the General Fund for current and future projects in the Capital Improvement Program decreased by $2,925,000 over the amount transferred in the prior fiscal year. ➢ When a new *Capital Projects Fund Policy* was implemented in Fiscal Year 2014/15, certain projects within the Capital Improvement Program were moved from the Communications and Information Systems Fund to the General Fund, resulting in a corresponding increase in transfers out and a negative impact to balance in Fiscal Year 2014/15 totaling $1,135,000.
-$260,000	**Communications and Information Systems Fund – Net Impact on Fund Balance**

The ***Fire Apparatus Fund*** had total fund balance of $21,452,261 at the end of Fiscal Year 2015/16. Fund balance was assigned to the Capital Improvement Program ($14,788,654) and purchase of fire apparatus and vehicles ($6,663,607). Total fund balance decreased by $3,988,171 during the current fiscal year. The prior fiscal year's fund balance decreased by $4,056,449, a difference of $68,278.

Impact on Fund Balance	Description
+$40,000	Charges for services were for vehicle charges to cash contract cities, which increased in accordance with the terms of the Joint Powers Agreement.
+$40,000	Revenues for use of money and property increased due to portfolio earnings and the market value investment gain allocated to the fund.
+$40,000	Miscellaneous revenues pertaining to bankruptcy proceeds increased during Fiscal Year 2015/16.
-$525,000	Developer contribution revenue decreased due to a Fiscal Year 2014/15 reimbursement from Rancho Mission Viejo Community Development for the type 1 engine to be placed into service at new Fire Station No. 56 (Village of Sendero).
+$475,000	Capital outlay expenditures to purchase and outfit vehicles vary each fiscal year based on organizational needs for new and replacement vehicles. Expenditures were higher in Fiscal Year 2014/15 due to the purchase of five type 1 engines, nineteen sport utility vehicles (Tahoes and Suburbans), four mail delivery box trucks, and a compact track loader. Significant purchases in Fiscal Year 2015/16 have included four type 1 engines, six sport utility vehicles (Executive Management), seventeen pickup trucks (Colorados), and one brush chipper.
+$70,000	**Fire Apparatus Fund – Net Impact on Fund Balance**

The ***Fire Stations and Facilities Fund*** had total fund balance of $15,858,647 at the end of Fiscal Year 2015/16. Amounts pertaining to CALFIRE revenues received for future fire station construction ($533,232) were classified as restricted. Remaining amounts were assigned to the Capital Improvement Program ($15,312,280) and construction projects ($13,135).

Total fund balance increased by $3,338,405 during the current fiscal year. The prior fiscal year's fund balance decreased by $2,889,645, a difference of $6,228,050.

Impact on Fund Balance	Description
+$30,000	Revenues for use of money and property increased due to portfolio earnings and the market value investment gain allocated to the fund (+$15,000). In addition, the General Fund temporarily borrowed $10 million and $5 million during Fiscal Year 2015/16 and Fiscal Year 2014/15, respectively, resulting in an increase in interfund interest earnings (+$15,000).
+$30,000	Miscellaneous revenues pertaining to bankruptcy proceeds increased during Fiscal Year 2015/16.
-$4,550,000	Developer contribution revenue generated by Secured Fire Protection Agreements with developers vary each fiscal year based on housing development projects being completed throughout the county. During Fiscal Year 2014/15, OCFA received over $4 million from various developers as reimbursement for construction of new Fire Station No. 56 (Village of Sendero) in Rancho Mission Viejo. In addition, $3.1 million was received from Heritage Fields El Toro LLC related to development at the Great Park in the City of Irvine, as compared to nearly $1.1 million received for the same project in Fiscal Year 2015/16. Other Fiscal Year 2015/16 developer contributions included over $1.4 million for projects at Baker Ranch, Elements Site 1 Apartments, and Gateway Apartments in the City of Irvine.
+$10,720,000	Capital outlay expenditures increased primarily due to the purchase of a centralized Urban Search and Rescue (USAR) warehouse during Fiscal Year 2014/15 at a cost of over $6.2 million, as well as approximately $4.6 million toward the multi-year construction project to build new Fire Station No. 56 (Village of Sendero). During Fiscal Year 2015/16, approximately $100,000 was spent on various tenant improvement projects necessary to convert the warehouse into a fully-functioning USAR facility.
+$6,230,000	**Fire Stations and Facilities Fund – Net Impact on Fund Balance**

General Fund Budgetary Highlights

The following table summarizes the changes in General Fund appropriations, as well as the variance between the final budget and actual amounts for Fiscal Year 2015/16.

	Original Budget	Increase (Decrease)	Final Budget	Variance Positive (Negative)	Actual Amounts
Salaries and benefits	$277,424,610	$19,523,220	$296,947,830	$ 2,533,746	$294,414,084
Services and supplies	43,999,102	(4,353,564)	39,645,538	3,480,446	36,165,092
Capital outlay	4,276,504	378,236	4,654,740	4,031,834	622,906
Interest and fiscal charges	318,050	436,386	754,436	13,999	740,437
Transfers out	2,127,821	(2,049,634)	78,187	-	78,187
	$328,146,087	$13,934,644	$342,080,731	$10,060,025	$332,020,706

Adjustments to Appropriations: Budgeted General Fund appropriations increased by $13,934,644 from the time the original budget was adopted until the end of the fiscal year. Adjustments typically pertained to

activities that occurred throughout the year but were either unknown or for which reliable estimates could not be determined at the time of the original budget adoption. Significant adjustments are listed below:

Reason for Adjustment to Original Budget	Increase (Decrease)
One-time contribution toward unfunded pension liability	$12,610,000
Jurisdictional equity adjustment payments	(7,880,000)
Overtime and backfill for response to out-of-county incidents	5,550,000
Grant activities	2,545,000
Transfers to Capital Improvement Program (CIP)	(2,050,000)
Operations Department salary savings	(1,000,000)
Staffing changes, reconfigurations, and service enhancements	750,000
Information Technology Division maintenance and support	615,000
Facilities maintenance	540,000
Interest on Tax and Revenue Anticipation Notes (TRAN) and interfund borrowing	435,000
Donations received	410,000
Various professional services	395,000
New hazmat specialist and tech rescue truck bonus pays	330,000
Outfitting four type one engines and four 100' tractor drawn aerials	300,000
Structural fire entitlement projects	85,000
Service Center equipment	80,000
Information Technology Division CIP projects	70,000
El Niño sand and other supplies	60,000
Urban Search and Rescue warehouse operating costs	40,000
Various other appropriations	50,000
Total adjustments	**$13,935,000**

Variance Between Final Budget and Actual Amounts: Final budgeted General Fund expenditures exceeded actual amounts, resulting in a positive budget variance totaling $10,060,025.

- The $2.5 million positive variance in salaries and benefits is attributed primarily to staff vacancies throughout the organization as follows:

Department	Amount
Operations	$ 970,000
Support Services	435,000
Business Services	390,000
Community Risk Reduction	390,000
Organizational Planning	235,000
Executive Management	115,000
Total variance	**$2,535,000**

- The $3.5 million net positive variance in services and supplies is primarily attributed to the following:

  - Approximately $3.7 million in various operating costs, projects, and other purchases of services and supplies were budgeted but not completed during Fiscal Year 2015/16. These uncompleted projects are typically delayed due to project complexity or time requirements and will be re-budgeted, if needed, to

Fiscal Year 2016/17. The majority of savings from Fiscal Year 2015/16 were created by uncompleted Information Technology Division (IT) operating costs and projects from the Capital Improvement Program (CIP), including projects that involved the installation of communications equipment on fire apparatus and other professional programming services.

- The amount budgeted for workers' compensation is based on an actuarially-determined estimate. Actual expenditures for workers' compensation cases typically occur over multiple years, which often attributes to a difference between budgeted costs and actual expenditures during any given fiscal year. During Fiscal Year 2015/16, actual claims paid from the General Fund were $200,000 more than the actuarial estimate, creating a negative budget variance.

- The $4.0 million positive variance in capital outlay is primarily attributed to the following:
  - A project to replace approximately 120 frontline cardiac monitors and 150 defibrillators was budgeted during Fiscal Year 2015/16 for $3.8 million. OCFA was in the bid process at the close of the fiscal year and, once completed, a contract is expected to be awarded and the purchase completed during Fiscal Year 2016/17. It is anticipated that these expenditure savings will be re-budgeted, as needed, to Fiscal Year 2016/17.
  - Approximately $200,000 in Urban Search and Rescue (USAR) equipment items were budgeted but not purchased during Fiscal Year 2015/16, including defibrillators and monitors, a box truck modification, and a database management program. These grant-funded projects will either be modified via the grant approval process or re-budgeted, as needed, to Fiscal Year 2016/17.

Capital Assets and Debt Administration

Capital Assets: OCFA's investment in capital assets for its government activities at the end of Fiscal Year 2015/16 totaled $187,910,677 (net of accumulated depreciation and amortization and related outstanding debt). This investment in capital assets includes land, buildings, equipment, vehicles, work in progress and construction in progress. Net capital assets decreased from the prior fiscal year by $2,889,439 (1.5%). Following is a summary of net capital assets by type for the current and prior fiscal years.

Capital Assets, Net of Accumulated Depreciation and Amortization
As of June 30, 2016 and 2015
(In Millions)

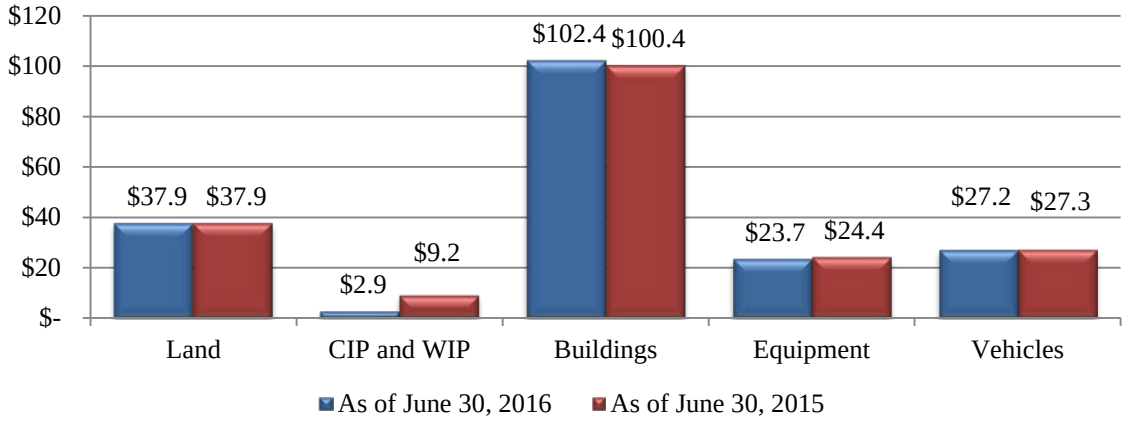

Major capital asset additions during Fiscal Year 2015/16 included the following:

- Construction in progress (CIP) and work in progress (WIP) accounted for forty-eight projects during Fiscal Year 2015/16, twenty of which were placed into service and twenty-eight of which were still in progress at year-end.

    - Construction projects completed over the span of multiple fiscal years are classified as CIP at year-end if they are not yet completed and placed into service. Additions totaling $100,000 included various tenant improvements at the Urban Search and Rescue warehouse in Foothill Ranch; permits for a dormitory remodel project at Fire Station No. 41 (Fullerton Airport); and permits for a generator upgrade project at the Regional Fire Operations and Training Center (RFOTC). Those three projects were still in progress at fiscal year-end, with work expected to be completed during Fiscal Year 2016/17.

    - Fire engines, trucks, and other vehicles, are classified as WIP at year-end if they are in the process of being outfitted for operation and will be completed over the span of multiple fiscal years. WIP also includes multi-year communications and information systems projects. WIP additions totaled over $2.7 million during Fiscal Year 2015/16, including costs pertaining to eight type one engines ($2.2 million); fifteen Chevrolet Colorado pickup trucks ($300,000); six front-line Chevrolet Suburban sport utility vehicles ($100,000); thirteen front-line Chevrolet Tahoe sport utility vehicles ($100,000); the Fire Station Alerting System ($40,000); and a winch installed on Heavy Rescue 6 ($10,000). Four type one engines, thirteen Chevrolet Tahoes, the Fire Station Alerting System, and the heavy rescue winch were all placed into service during the fiscal year, while the remaining projects were still in process as of June 30, 2016.

- Fiscal Year 2015/16 building additions consisted of $5.1 million for new Fire Station No. 56 (Village of Sendero) in Rancho Mission Viejo, which was transferred from CIP and placed into service in July 2015.

- Equipment additions during Fiscal Year 2015/16 totaling $1.9 million consisted of $600,000 in new purchases, plus $1.3 million of completed, multi-year projects transferred in from WIP. The most individually significant additions included the Fire Station Alerting System (cumulative $1.3 million); three servers ($200,000); sixteen mobile radios ($85,000); and six mobile vehicle lift systems ($60,000).

- Vehicle additions during Fiscal Year 2015/16 totaling $3.3 million consisted of $600,000 in new purchases, plus $2.7 million of completed vehicles transferred in from WIP. The most individually significant additions included four type one engines ($2.1 million); thirteen front-line sport utility vehicles ($600,000); six sport utility vehicles utilized by Executive Management ($300,000); ten pickup trucks assigned to Community Risk Reduction and Fleet Services ($250,000); and one brush chipper ($70,000).

Major capital asset deletions during Fiscal Year 2015/16 included the following:

- Thirteen capital equipment items were sold, scrapped, or written off during Fiscal Year 2015/16, including seven thermal imaging cameras ($70,000); one compressor ($30,000); two mobile radios ($15,000); one laptop ($5,000); one portable radio ($5,000); and one software license ($5,000). The net book value of all equipment disposals was approximately $10,000, as most items had reached the end of their useful service lives and were either fully or mostly depreciated. Most equipment was written off as obsolete during the annual physical inventory process. Other items were traded in to a vendor upon purchase of a replacement item, converted into training props, or accidentally damaged beyond repair.

- Seven vehicles were removed from OCFA's fleet during Fiscal Year 2015/16 as part of OCFA's ongoing vehicle replacement plan. The net book value of all vehicle disposals was $0, as all items had reached the end of their useful service lives and were fully depreciated. Four sport utility vehicles ($150,000) and two sedans ($50,000) were sold at public auction. One sport utility vehicle ($20,000) was written off as a total loss due to a vehicle accident that occurred during the fiscal year.

Additional information pertaining to the OCFA's capital assets can be found in Note 15 of the accompanying Notes to the Financial Statements.

Long-term Debt: Total long-term liabilities increased by net $56,925,869 (9.3%) during Fiscal Year 2015/16.

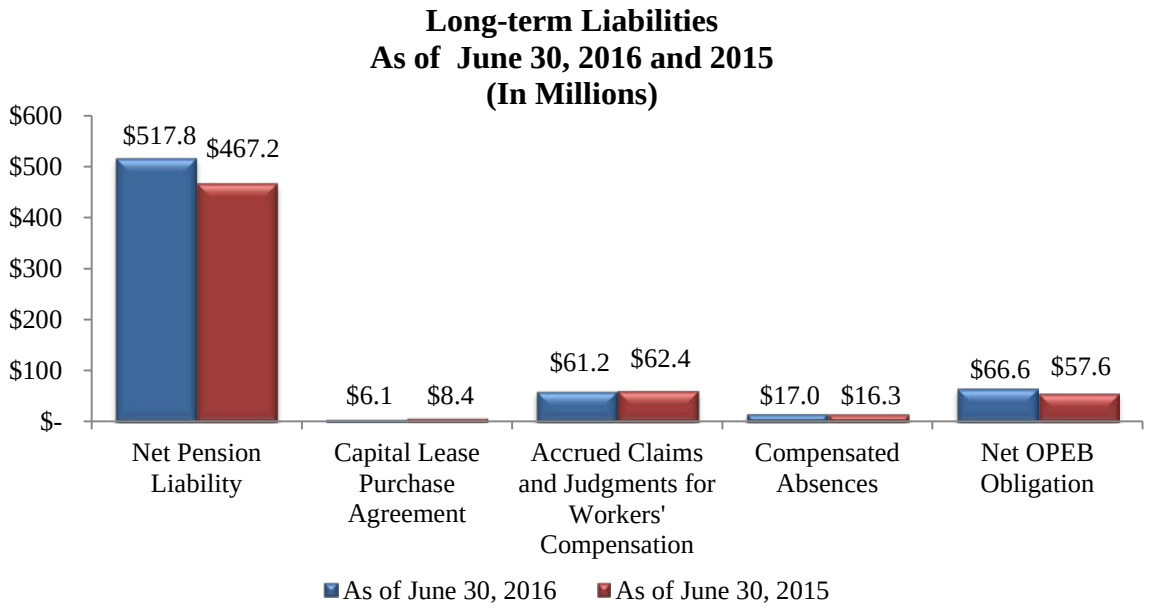

The most significant increases and decreases to long-term liabilities pertained to the net pension liability for the Orange County Employees Retirement System (OCERS) pension plan, which is being reported in the financial statements as a long-term liability for the first time in conjunction with the implementation of Governmental Accounting Standards Board (GASB) Statement No. 68. During Fiscal Year 2015/16, OCFA's share of the plan's net pension liability, as determined by an actuarial valuation for the plan as a whole, increased by $133.4 million. This addition was offset by $82.7 million in actual employer and employee contributions remitted by OCFA to the plan. The increases and decreases reported for the long-term pension liability are reported using an "accounting-based approach" in order to fully capture OCFA's net liability and related pension expense incurred during each fiscal year. This differs from the "funding-based approach" used to calculate annual retirement rates and the amount of required employer and employee contributions due from OCFA to OCERS.

Additional information on the OCFA's long-term liabilities can be found in Note 16 of the accompanying Notes to the Financial Statements.

Next Year's Budget

The Fiscal Year 2016/17 General Operating Fund adopted expenditure budget is approximately $323.2 million, which is a net increase of $5.8 million (1.8%) from the final Fiscal Year 2015/16 General Operating Fund budget totaling $317.4 million. (These amounts exclude one-time and grant-related items, as well as unspent, encumbered appropriations from the prior fiscal year that are effectually re-appropriated in the ensuing year's budget). Highlights of the Fiscal Year 2016/17 General Operating Fund Budget are as follow:

- Budgeted salaries and benefits increased by $3.7 million. The budget reflects annual costs in accordance with approved Memorandums of Understanding with each labor group. The retirement budget for Fiscal Year 2016/17 is based on rates provided by the Orange County Employees Retirement System (OCERS). For Fiscal Year 2016/17, those rates are approximately 1.1% higher for safety personnel and 3.8% lower for non-safety personnel.

- Budgeted services and supplies, capital outlay, and debt service increased by $1.3 million. Overall, budgets were held flat as compared to Fiscal Year 2015/16, unless specific increases were identified by OCFA management or one-time grant proceeds were received. In general, the base Fiscal Year 2016/17 budget excluded one-time, grant-related, and assistance by hire expenditures at the time of adoption, as these projects will be budgeted as-needed throughout the upcoming fiscal year.

- The total number of authorized positions in the Fiscal Year 2016/17 budget is 1,363, which is the same as the final, authorized position list as of June 30, 2016. However, the budget reflects funding for only 1,284 of those authorized positions, since frozen vacancies, grant-funded, and limited term positions are not included at the time the original budget is adopted. Changes in authorized positions by unit are summarized as follows:

Unit	FY 2016/17 Budget	FY 2015/16 Final	Increase (Decrease)
Firefighter Unit	1,023	1,023	-
Fire Management Unit	45	45	-
General Unit	213	213	-
Supervisory Management Unit	27	27	-
Supported Employment Unit	4	4	-
Administrative Management	43	43	-
Executive Management	8	8	-
Total authorized positions	**1,363**	**1,363**	**-**

Requests for Information

This financial report is designed to provide a general overview of OCFA's finances for all those with an interest in the government's finances. Questions concerning any of the information provided in this report or requests for additional financial information should be addressed to the Finance Manager/Auditor, Orange County Fire Authority, 1 Fire Authority Road, Irvine, California 92602.

Orange County Fire Authority Safety Message

ABC's of Water Safety
(Part 1 of 4)

Children and adults drown without a sound. Drowning is the leading cause of accidental death for children under the age of five and can happen in less than two inches of water. Prevent drowning. Never swim alone.

A – Active Adult Supervision

- ✓ Keep infants and toddlers within an arm's reach when near water.
- ✓ Never swim alone, even adults.
- ✓ Never rely on water wings, rafts, or other swimming aids in place of U.S. Coast Guard-approved personal flotation devices (life jackets).
- ✓ If a child or adult is missing, every second counts. Check the water FIRST!

(Continued on Page 27)

Government-wide Financial Statements

Open House - October 2015

Orange County Fire Authority Safety Message

ABC's of Water Safety
(Part 2 of 4)

(Continued from Page 26)

Children and adults drown without a sound. Drowning is the leading cause of accidental death for children under the age of five and can happen in less than two inches of water. Prevent drowning. Never swim alone.

B - Barriers

- ✓ Install and maintain proper fencing around the pool and spa to isolate swimming areas from the home and play areas.
- ✓ Use multiple layers of protection, such as fences, gate/door alarms, and safety covers, to keep children away from pools and spas.
- ✓ Use self-closing, self-latching gates that open outward, away from the pool.
- ✓ Remove items such as chairs or tables that a child could use to climb over a fence.

(Continued on Page 32)

ORANGE COUNTY FIRE AUTHORITY
Statement of Net Position
June 30, 2016
(With Comparative Data for Prior Year)

	Primary Government	
	Governmental Activities	
	2016	2015
Assets:		
Cash and investments (Note 4)	$ 177,729,367	$ 164,787,506
Receivables:		
Accounts, net (Note 5)	2,566,770	3,976,952
Accrued interest	224,075	96,621
Prepaid costs and other assets	36,789,256	31,160,094
Due from other governments, net (Note 6)	11,671,971	8,702,777
Capital assets (Note 15):		
Land	37,887,850	37,887,850
Construction in progress	102,341	5,092,288
Work in progress	2,795,704	4,121,289
Capital assets, net of accumulated depreciation/amortization	153,235,229	152,145,415
Total assets	**423,002,563**	**407,970,792**
Deferred Outflows of Resources:		
Deferred outflows of resources related to pensions (Note 16b)	139,040,544	85,763,924
Total deferred outflows of resources	**139,040,544**	**85,763,924**
Liabilities:		
Accounts payable	3,008,616	3,602,338
Accrued liabilities	14,824,059	12,828,886
Accrued interest	3,427	4,737
Unearned revenue (Note 8)	33,116	3,278,818
Due to other governments (Note 7)	123,047	10,072,547
Long-term liabilities (Note 16a):		
Other due within one year	13,377,381	12,512,349
Other due in more than one year	70,948,919	74,603,168
Proportionate share net pension liability	517,833,497	467,208,681
Net OPEB obligation	66,643,396	57,553,126
Total liabilities	**686,795,458**	**641,664,650**
Deferred Inflows of Resources:		
Deferred inflows of resources related to pensions (Note 16b)	35,911,567	21,194,439
Total deferred outflows of resources	**35,911,567**	**21,194,439**
Net position:		
Net investment in capital assets (Note 15b)	187,910,677	190,800,116
Restricted for (Note 10):		
Capital projects	533,232	533,232
Other purposes	13,867	55,538
Unrestricted	(349,121,694)	(360,513,259)
Total net position	**$ (160,663,918)**	**$ (169,124,373)**

See Notes to the Financial Statements

Component Unit	
OCFA Foundation	
2016	2015
$ 108,718	$ 108,720
90	-
-	-
7,015	723
-	-
-	-
-	-
-	-
-	-
115,823	**109,443**
-	-
-	-
142	4,529
-	-
-	-
6,000	-
-	-
-	-
-	-
-	-
-	-
6,142	**4,529**
-	-
-	-
-	-
-	-
47,448	52,583
62,233	52,331
$ 109,681	**$ 104,914**

ORANGE COUNTY FIRE AUTHORITY
Statement of Activities
Year ended June 30, 2016
(With Comparative Data for Prior Year)

	Primary Government	
	Governmental Activities	
	2016	2015
Expenses:		
Public safety:		
Salaries and benefits	$ 316,292,785	$ 335,419,737
Services and supplies	35,127,573	46,073,201
Depreciation and amortization (Note 15d)	9,267,982	9,050,195
Interest on long-term debt	917,320	582,565
Total program expenses	**361,605,660**	**391,125,698**
Program revenues:		
Public safety:		
Charges for services	117,263,679	113,150,325
Operating grants and contributions	12,165,015	11,410,019
Capital grants and contributions	3,331,088	9,182,195
Total program revenues	**132,759,782**	**133,742,539**
Net program (expenses) revenues	(228,845,878)	(257,383,159)
General revenues:		
Property taxes	219,840,417	205,141,237
Investment income	1,654,065	839,864
Gain on sale of capital assets	6,000	63,953
Miscellaneous	2,823,503	1,235,004
Total general revenues	**224,323,985**	**207,280,058**
Change in net position	(4,521,893)	(50,103,101)
Net position at beginning of year, as restated (Note 3)	(156,142,025)	(119,021,272)
Net position at end of year	**$ (160,663,918)**	**$ (169,124,373)**

See Notes to the Financial Statements

Component Unit	
OCFA Foundation	
2016	2015
$ -	$ -
65,230	61,633
-	-
-	-
65,230	**61,633**
-	-
69,997	62,038
-	-
69,997	**62,038**
4,767	405
-	-
-	-
-	-
-	-
-	-
4,767	405
104,914	104,509
$ 109,681	**$ 104,914**

Orange County Fire Authority Safety Message

ABC's of Water Safety
(Part 3 of 4)

(Continued from Page 27)

Children and adults drown without a sound. Drowning is the leading cause of accidental death for children under the age of five and can happen in less than two inches of water. Prevent drowning. Never swim alone.

C - Classes

- ✓ Learn to swim. Do not rely on swimming aids such as water wings, rafts, or noodles.
- ✓ Learn first aid and CPR. Always keep a phone nearby to call 9-1-1.
- ✓ Teach children that running, jumping, and pushing others on pool decks is dangerous and can cause injuries.

(Continued on Page 33)

Fund Financial Statments

Firefighter Academy 41 Graduation - December 2015

FIRE
ORANGE COUNTY
CALIFORNIA
AUTHORITY
Est. 1995

Orange County Fire Authority Safety Message

ABC's of Water Safety
(Part 4 of 4)

(Continued from Page 32)

Children and adults drown without a sound. Drowning is the leading cause of accidental death for children under the age of five and can happen in less than two inches of water. Prevent drowning. Never swim alone.

D – Drain Safety

- ✓ Keep children away from pool/spa drains to avoid entrapment and entanglements.
- ✓ Keep long hair tied back and remove dangling items like jewelry and bathing suit ties.
- ✓ Install compliant safety drain covers and automatic shut-off pump systems (Safety Vacuum Release Systems).
- ✓ Identify and mark the location of the electrical cut-off switch for the pool or spa pump.
- ✓ Know where the pool/spa pump switch is and how to turn it off.

ORANGE COUNTY FIRE AUTHORITY
Governmental Funds
Balance Sheet
June 30, 2016
(With Comparative Data for Prior Year)

		Capital
	General Fund	**Communications and Information Systems**
Assets:		
Cash and investments (Note 4)	$ 121,350,414	$ 19,105,606
Receivables:		
Accounts, net (Note 5)	2,442,570	-
Accrued interest	125,706	21,253
Prepaid costs and other assets	36,789,256	-
Due from other governments, net (Note 6)	10,050,255	-
Total assets	**$ 170,758,201**	**$ 19,126,859**
Liabilities:		
Accounts payable	$ 2,720,274	$ 124,587
Accrued liabilities	14,824,059	-
Unearned revenue (Note 8)	33,116	-
Due to other governments (Note 7)	123,047	-
Total liabilities	**17,700,496**	**124,587**
Deferred Inflows of Resources:		
Unavailable revenue	-	-
Total deferred inflows of resources	**-**	**-**
Fund balances:		
Nonspendable - prepaid costs (Note 9)	36,779,845	-
Restricted for (Note 10):		
Capital improvement program	-	-
Operations Department	13,867	-
Committed to - SFF cities enhancements (Note 11)	584,464	-
Assigned to (Note 12):		
Capital improvement program	4,668,314	18,977,557
Workers' compensation	73,720,054	-
Executive Management	36,690	-
Operations Department	51,484	-
Community Risk Reduction Department	15,845	-
Business Services Department	162,699	-
Support Services Department	119,743	-
Organizational Planning Department	21,000	-
Facilities projects	69,987	-
Communications and IT projects	56,909	24,715
Fire apparatus and other vehicles	-	-
Construction projects	-	-
Unassigned (Note 13)	36,756,804	-
Total fund balances	**153,057,705**	**19,002,272**
Total liabilities, deferred inflows of resources, and fund balances	**$ 170,758,201**	**$ 19,126,859**

See Notes to the Financial Statements

Projects Funds		Total Governmental Funds	
Fire Apparatus	**Fire Stations and Facilities**	**2016**	**2015**
$ 21,518,136	$ 15,755,211	$ 177,729,367	$ 164,787,506
-	124,200	2,566,770	3,976,952
14,835	62,281	224,075	96,621
-	-	36,789,256	31,160,094
-	-	10,050,255	6,967,289
$ 21,532,971	**$ 15,941,692**	**$ 227,359,723**	**$ 206,988,462**
$ 80,710	$ 83,045	$ 3,008,616	$ 3,602,338
-	-	14,824,059	12,828,886
-	-	33,116	3,278,818
-	-	123,047	10,072,547
80,710	**83,045**	**17,988,838**	**29,782,589**
-	-	-	316,087
-	**-**	**-**	**316,087**
-	-	36,779,845	31,160,094
-	533,232	533,232	533,232
-	-	13,867	55,538
-	-	584,464	691,265
14,788,654	15,312,280	53,746,805	48,158,215
-	-	73,720,054	68,494,796
-	-	36,690	98,415
-	-	51,484	46,859
-	-	15,845	354
-	-	162,699	66,963
-	-	119,743	207,784
-	-	21,000	33,890
-	-	69,987	52,061
-	-	81,624	143,061
6,663,607	-	6,663,607	8,030,783
-	13,135	13,135	-
-	-	36,756,804	19,116,476
21,452,261	**15,858,647**	**209,370,885**	**176,889,786**
$ 21,532,971	**$ 15,941,692**	**$ 227,359,723**	**$ 206,988,462**

ORANGE COUNTY FIRE AUTHORITY
Reconciliation of the Balance Sheet of Governmental Funds to the Statement of Net Position
June 30, 2016
(With Comparative Data for Prior Year)

	2016	2015
Fund balances of governmental funds	**$ 209,370,885**	**$ 176,889,786**
Capital Assets		
When capital assets that are to be used in governmental activities are purchased or constructed, their costs are recorded as expenditures in governmental funds. However, the Statement of Net Position includes those capital assets among the assets of the OCFA as a whole, net of accumulated depreciation/amortization.		
Capital assets	318,064,366	314,353,552
Accumulated depreciation/amortization	(124,043,242)	(115,106,710)
Long-term Liabilities and Receivables		
Long-term liabilities applicable to governmental activities are not due and payable in the current period and, accordingly, are not reported as governmental fund liabilities. A portion of OCFA's long-term liability for compensated absences is reimbursable by the City of Santa Ana, and therefore offset by a long-term receivable. Long-term receivables are not available to fund the activities of the current period, and are likewise not reported as governmental fund assets. All assets and liabilities, both current and long-term, are reported in the Statement of Net Position.		
OCERS pension plan:		
Net pension liability	(517,669,806)	(466,968,323)
Deferred outflows of resources	139,005,504	85,761,443
Deferred inflows of resources	(35,819,433)	(21,185,872)
Extra Help pension plan:		
Net pension liability	(163,691)	(240,358)
Deferred outflows of resources	35,040	2,481
Deferred inflows of resources	(92,134)	(8,567)

ORANGE COUNTY FIRE AUTHORITY
Reconciliation of the Balance Sheet of Governmental Funds to the Statement of Net Position
(Continued)

	2016	2015
Long-term Liabilities and Receivables, (Continued)		
Capital lease purchase agreements	(6,110,447)	(8,446,726)
Accrued claims and judgments	(61,196,645)	(62,372,690)
Compensated absences	(17,019,208)	(16,296,101)
Long-term receivable for compensated absences	1,621,716	1,735,488
Net OPEB obligation	(66,643,396)	(57,553,126)
Accrued Interest		
Accrued interest payable for the current portion of interest due on long-term liabilities has not been reported in the governmental funds. Accrued interest was calculated and reported in the Statement of Net Position.	(3,427)	(4,737)
Unavailable Revenues		
Unavailable revenues are reported in the governmental funds if not collected or expected to be collected within the OCFA's availability period. However, amounts relating to unavailable revenues are not reported in the Statement of Net Position since revenue recognition is not based upon measurable and available criteria.		
Due from other governments - Santa Ana start-up costs	-	316,087
Net position of governmental activities	**$ (160,663,918)**	**$ (169,124,373)**

See Notes to the Financial Statements

ORANGE COUNTY FIRE AUTHORITY
Governmental Funds
Statement of Revenues, Expenditures and Changes in Fund Balances
Year ended June 30, 2016
(With Comparative Data for Prior Year)

		Capital
	General Fund	**Communications and Information Systems**
Revenues:		
Taxes	$ 219,840,417	$ -
Intergovernmental	25,978,081	-
Charges for services	102,408,896	-
Use of money and property	1,353,083	111,865
Miscellaneous	2,096,571	312,605
Developer contributions	-	-
Total revenues	**351,677,048**	**424,470**
Expenditures:		
Current - public safety:		
Salaries and benefits	294,414,084	-
Services and supplies	36,165,092	84,845
Capital outlay	622,906	71,395
Debt service:		
Principal retirement	-	-
Interest and fiscal charges	740,437	-
Total expenditures	**331,942,519**	**156,240**
Excess (deficiency) of revenues over (under) expenditures	19,734,529	268,230
Other financing sources (uses):		
Transfers in (Note 14)	-	78,187
Transfers out (Note 14)	(78,187)	-
Sale of capital and other assets	24,470	-
Insurance recoveries	121,288	-
Total other financing sources (uses)	**67,571**	**78,187**
Net change in fund balances	19,802,100	346,417
Fund balances, beginning of year, as restated (Note 3)	133,255,605	18,655,855
Fund balances, end of year	**$ 153,057,705**	**$ 19,002,272**

See Notes to the Financial Statements

Projects Funds		Total Governmental Funds	
Fire Apparatus	**Fire Stations and Facilities**	**2016**	**2015**
$ -	$ -	$ 219,840,417	$ 205,141,237
-	-	25,978,081	23,565,214
1,421,540	-	103,830,436	102,000,677
131,954	74,414	1,671,316	841,522
191,832	185,165	2,786,173	1,679,976
-	3,233,082	3,233,082	8,307,207
1,745,326	**3,492,661**	**357,339,505**	**341,535,833**
-	-	294,414,084	285,988,997
248	53,433	36,303,618	40,490,370
3,201,526	100,823	3,996,650	16,644,798
2,336,279	-	2,336,279	2,276,963
195,444	-	935,881	585,501
5,733,497	**154,256**	**337,986,512**	**345,986,629**
(3,988,171)	3,338,405	19,352,993	(4,450,796)
-	-	78,187	6,845,320
-	-	(78,187)	(6,845,320)
-	-	24,470	134,123
-	-	121,288	32,948
-	**-**	**145,758**	**167,071**
(3,988,171)	3,338,405	19,498,751	(4,283,725)
25,440,432	12,520,242	189,872,134	181,173,511
$ 21,452,261	**$ 15,858,647**	**$ 209,370,885**	**$ 176,889,786**

ORANGE COUNTY FIRE AUTHORITY
Reconciliation of the Statement of Revenues, Expenditures and Changes in Fund Balances of Governmental Funds to the Statement of Activities
Year ended June 30, 2016
(With Comparative Data for Prior Year)

	2016	2015
Net change in fund balances - total governmental funds	**$ 19,498,751**	**$ (4,283,725)**
Capital Assets		
Governmental funds report capital outlays as expenditures. In the Statement of Activities, the cost of those assets is allocated over their estimated useful lives as depreciation/amortization expense.		
Capital outlay	3,996,650	16,644,798
Capitalized labor, included in salaries and benefits	-	23,975
Depreciation/amortization expense	(9,267,982)	(9,050,195)
Capital assets received through grant or donation are recognized as revenue in the Statement of Activities at their estimated fair value at time of receipt.		
From OCFA Foundation	10,000	-
From other grantors and donors	44,984	37,736
Governmental funds report the proceeds from sale of capital and other assets as other financing sources. In the Statement of Activities, those proceeds are offset by the net book value of the asset, resulting in a gain or loss on the sale.		
Capital asset disposals	(340,820)	(3,856,195)
Accumulated depreciation/amortization on disposals	331,450	3,805,380
Long-term Liabilities and Receivables		
Repayment of long-term debt principal on the capital lease purchase agreements is reported as an expenditure in governmental funds. Principal payments reduce the long-term liability in the Statement of Net Position and do not result in an expense in the Statement of Activities.	2,336,279	2,276,963
Other long-term liabilities are reported in the Statement of Net Position. The net annual change in the liability is recognized as an expense in the Statement of Activities. Long-term liabilities do not require the use of current financial resources and are not reported as expenditures in the governmental funds.		
OCERS pension plan	(12,090,983)	(39,860,404)
Extra Help pension plan	25,659	(2,905)
Accrued claims and judgments - workers' compensation	1,176,045	(5,582,831)

ORANGE COUNTY FIRE AUTHORITY
Reconciliation of the Statement of Revenues, Expenditures and Changes in Fund Balances of Governmental Funds to the Statement of Activities
(Continued)

	2016	2015
Compensated absences - Santa Ana general leave	113,772	(18,482)
Compensated absences - other leave balances	(836,879)	(105,115)
A long-term receivable has been established in the Statement of Net Position for the portion of compensated absences reimbursable by the City of Santa Ana. The receivable balance is reduced over time as leave balances are used by employees and subsequently reimbursed by the city. Those reimbursements are reported as revenue in the governmental funds.	(113,772)	18,482
Contributions to the defined benefit retiree medical plan are made on a pay-as-you-go basis in the governmental fund financial statements. If actual contributions are less than the actuarially-determined required amount, the difference is reported as an expense in the Statement of Activities.	(9,090,270)	(9,467,809)
Accrued Interest		
Interest expenditures are reported when paid in the governmental funds, while the net change in accrued interest incurred for the period is recognized as interest expense in the Statement of Activities.	1,310	1,278
Unavailable Revenues		
Certain receivables and grants that have been accrued but not collected are reflected as unavailable revenue in the governmental funds. All earned revenue is recognized in the Statement of Activities regardless of when collected.		
Intergovernmental revenue - property tax increment	-	(367,964)
Charges for services - Santa Ana start-up costs	(316,087)	(316,088)
Interfund Transactions		
Transactions between governmental funds are eliminated for presentation in the government-wide financial statements.		
Transfers in	(78,187)	(6,845,320)
Transfers out	78,187	6,845,320
Use of money and property	(17,251)	(1,658)
Interest and fiscal charges	17,251	1,658
Change in net position of governmental activities	**$ (4,521,893)**	**$ (50,103,101)**

See Notes to the Financial Statements

ORANGE COUNTY FIRE AUTHORITY
General Fund
Budgetary Comparison Statement
Year ended June 30, 2016
(With Comparative Data for Prior Year)

	2016				2015
	Budget Amounts		Actual	Variance with Final Budget Positive	Actual
	Original	Final	Amounts	(Negative)	Amounts
Budgetary fund balance, July 1, as restated	**$ 133,255,605**	**$ 133,255,605**	**$ 133,255,605**	**$ -**	**$ 115,504,289**
Resources (inflows):					
Taxes	214,445,545	218,156,295	219,840,417	1,684,122	205,141,237
Intergovernmental	14,942,177	23,926,860	25,978,081	2,051,221	23,565,214
Charges for services	101,969,304	101,173,891	102,408,896	1,235,005	100,619,516
Use of money and property	1,558,531	1,008,421	1,353,083	344,662	651,975
Miscellaneous	1,008,733	2,203,027	2,096,571	(106,456)	1,120,697
Transfers in	-	-	-	-	3,844,414
Sale of capital and other assets	50,000	50,480	24,470	(26,010)	134,123
Insurance recoveries	-	79,433	121,288	41,855	32,948
Total resources (inflows)	**333,974,290**	**346,598,407**	**351,822,806**	**5,224,399**	**335,110,124**
Amounts available for appropriations	**467,229,895**	**479,854,012**	**485,078,411**	**5,224,399**	**450,614,413**
Charges to appropriation (outflows):					
Salaries and benefits	277,424,610	296,947,830	294,414,084	2,533,746	285,988,997
Services and supplies	43,999,102	39,645,538	36,165,092	3,480,446	40,317,142
Capital outlay	4,276,504	4,654,740	622,906	4,031,834	703,370
Interest and fiscal charges	318,050	754,436	740,437	13,999	330,741
Transfers out	2,127,821	78,187	78,187	-	3,000,906
Total charges to appropriations	**328,146,087**	**342,080,731**	**332,020,706**	**10,060,025**	**330,341,156**
Budgetary fund balance, June 30	**$ 139,083,808**	**$ 137,773,281**	**$ 153,057,705**	**$ 15,284,424**	**$ 120,273,257**

See Notes to the Financial Statements

ORANGE COUNTY FIRE AUTHORITY
Fiduciary Funds
Statement of Fiduciary Net Position
June 30, 2016
(With Comparative Data for Prior Year)

	Pension Trust Funds		
	Extra Help Retirement	Total Pension Trust Funds 2016	Total Pension Trust Funds 2015
Assets:			
Cash and investments (Note 4):			
Local Agency Investment Fund - Domestic fixed income securities	$ 74,798	$ 74,798	$ 73,031
Total assets	**74,798**	**74,798**	**73,031**
Net position restricted for pensions	**$ 74,798**	**$ 74,798**	**$ 73,031**

See Notes to the Financial Statements

ORANGE COUNTY FIRE AUTHORITY
Fiduciary Funds
Statement of Changes in Fiduciary Net Position
Year ended June 30, 2016
(With Comparative Data for Prior Year)

	Pension Trust Funds		
	Extra Help Retirement	Total Pension Trust Funds 2016	Total Pension Trust Funds 2015
Additions:			
Contributions:			
Employer	$ 2,267	$ 2,267	$ 2,481
Plan members	8,923	8,923	11,831
Total contributions	11,190	11,190	14,312
Net investment income:			
Interest	1,219	1,219	714
Total net investment income	1,219	1,219	714
Total additions	**12,409**	**12,409**	**15,026**
Deductions:			
Benefits and refunds paid to plan members and beneficiaries	10,642	10,642	6,459
Total deductions	**10,642**	**10,642**	**6,459**
Change in net position	1,767	1,767	8,567
Net position, beginning of year	73,031	73,031	64,464
Net position, end of year	**$ 74,798**	**$ 74,798**	**$ 73,031**

See Notes to the Financial Statements

Notes to the Financial Statements

Best and Bravest Award Dinner - February 2016

ORANGE COUNTY FIRE AUTHORITY

Index to Notes to the Financial Statements

Year ended June 30, 2016

Page

(1) Summary of Significant Accounting Policies 47
(2) Compliance and Accountability 54
(3) Prior Period Adjustment 56
(4) Cash and Investments 57
(5) Accounts Receivable 61
(6) Due from Other Governments 61
(7) Due to Other Governments 62
(8) Unearned and Unavailable Revenue 62
(9) Fund Balance of Governmental Funds – Nonspendable 62
(10) Fund Balance of Governmental Funds – Restricted 63
(11) Fund Balance of Governmental Funds – Committed 64
(12) Fund Balance of Governmental Funds – Assigned 64
(13) Fund Balance of Governmental Funds – Unassigned 66
(14) Interfund Transfers 66
(15) Capital Assets 66
(16) Long-term Liabilities 68
(17) Commitments and Contingencies 70
(18) Lessor in Operating Lease Agreements 72
(19) Lessee in Operating Lease Agreements 73
(20) Insurance 74
(21) Retirement Plan for Full-Time Employees 76
(22) Retirement Plan for Part-Time Employees 83
(23) Defined Benefit Retiree Medical Plan – Other Post-Employment Benefits (OPEB) 88
(24) Retiree Defined Contribution Healthcare Expense Reimbursement Plan 91
(25) Short-term Debt 92

Orange County Fire Authority Safety Message

Smoke Alarms
(Part 1 of 3)

Almost two-thirds of all home fire deaths occur in homes with no working smoke alarm. Protect your family by installing smoke alarms, inspecting them regularly, and practicing home fire drills.

Install

- ✓ Install smoke alarms inside and outside each bedroom and sleeping area and on every level of the home.
- ✓ Install smoke alarms on the ceiling or high on a wall. Keep them at least 10 feet from the stove to reduce false alarms.
- ✓ Check the back for the manufacturer's date. Replace all alarms when they're 10 years old.
- ✓ Use interconnected smoke alarms. When one sounds, they all sound.
- ✓ It's safest to use both ionization and photoelectric smoke alarms. Ionization alarms are quicker to warn about flaming fires. Photoelectric smoke alarms are quicker to warn about smoldering fires (fires that burn slowly with little smoke, then burst into flames).
- ✓ Special alarms with strobe lights and bed shakers are available for people who are deaf or hard of hearing.

(Continued on Page 94)

ORANGE COUNTY FIRE AUTHORITY

Notes to the Financial Statements

Year ended June 30, 2016

(1) Summary of Significant Accounting Policies

(a) Description of the Reporting Entity

Effective March 1, 1995, the County of Orange (County) and the cities of Buena Park, Cypress, Dana Point, Irvine, Laguna Hills, Laguna Niguel, Lake Forest, La Palma, Los Alamitos, Mission Viejo, Placentia, San Clemente, San Juan Capistrano, Seal Beach, Stanton, Tustin, Villa Park, and Yorba Linda entered into a joint powers agreement to create the Orange County Fire Authority (OCFA). Since the creation of the OCFA, the cities of Aliso Viejo, Laguna Woods, Rancho Santa Margarita, Santa Ana, and Westminster have also joined as members.

The purpose of OCFA is to provide fire suppression, protection, prevention, and related and incidental services including, but not limited to, emergency medical and transport services and hazardous materials regulation, as well as providing facilities and personnel for such services. The OCFA's governing board consists of one representative from each member city and two from the County.

The operations of the OCFA are funded with a portion of property taxes collected by the County (Structural Fire Fund) for the unincorporated area and on behalf of all member cities except for the cities of Buena Park, Placentia, San Clemente, Santa Ana, Seal Beach, Stanton, Tustin, and Westminster, which are considered to be cash contract cities. The County pays all Structural Fire Fund taxes it collects to the OCFA. The cash contract cities make cash contributions based on OCFA's annual budget. Upon dissolution, all surplus money and property of the OCFA will be conveyed or distributed to each member in proportion to all funds provided to the OCFA by that member or by the County on behalf of that member during its membership. Each member must execute any instruments of conveyance necessary to effectuate such distribution or transfer.

As required by generally accepted accounting principles, these financial statements present both the OCFA as the primary government, as well as any of its component units. A component unit is an entity for which a primary government entity is considered to be financially accountable.

- The primary government is considered to be financially accountable for an organization if it appoints a voting majority of that organization's governing body, and (1) if the primary government is able to impose its will on that organization or (2) there is a potential for that organization to provide specific financial benefits to or impose specific financial burdens on the primary government.

- The primary government may also be considered financially accountable for an organization if that organization is fiscally dependent on the primary government (i.e., the organization is unable to approve or modify its budget, levy taxes or set rates/charges, or issue bonded debt without approval from the primary government).

- In certain cases, other organizations are included as component units if the nature and significance of their relationship with the primary government are such that their exclusion would cause the primary government's financial statements to be misleading or incomplete, even though the primary government is not considered financially accountable for that organization under the criteria previously described. A legally separate, tax exempt organization is reported as a component unit if (1) the economic resources received or held by the organization are entirely or almost entirely for the direct benefit of the primary government or its constituents; (2) the primary government is entitled to or has the ability otherwise access a majority of the economic resources received or held by the organization; and (3) the economic resources received or held by the organization are significant to the primary government.

Component units must be classified as either "blended" or "discrete" in the primary government's financial statements. A component unit is "blended" if the governing boards of the two organizations are substantially the same, or if the component unit provides services entirely or almost entirely to the primary government. Because of the closeness of its relationship with the primary government, a "blended" component unit is presented as though it is part of the primary government and, therefore, is included in both the government-wide and fund financial statements. Component units that do not meet either of these two criteria are considered "discrete" and are reported only in the government-wide financial statements.

A brief description of OCFA's component unit is as follows:

- The **OCFA Foundation** ("Foundation") was established by the OCFA Board of Directors in July 2010, and qualifies as a nonprofit corporation under Section 501(c)(3) of the Internal Revenue Code and Section 23701(d) of the California Revenue and Taxation Code. The purpose of the Foundation is to support the OCFA with the additional resources needed to provide an enhanced level of fire prevention, suppression, and emergency medical services to the citizens of Orange County. The Foundation assists the OCFA by conducting fundraising activities and securing non-government grant funds, services, materials, and contributions that support OCFA's mission. OCFA provided $50,000 from the General Fund as start-up funding for the Foundation. The tax exempt status of the Foundation was approved by the Internal Revenue Service on February 23, 2011, and the inaugural meeting of the Foundation Board was April 28, 2011.

  The Foundation's Board of Directors consists of no less than three and no more than seven members, the exact number determined by resolution of the Foundation Board. Foundation Board members must have been active in or had significant prior experience in governmental or community organizations, or the fire service. The Foundation Board may consist of any combination of members of the public, OCFA employees, and/or past or current OCFA Board members. Initially, the Chair of OCFA's Board appointed the first three Foundation Directors. As of June 30, 2016, there were five non-OCFA Board members on the Foundation's Board. Additional members may be appointed by the Foundation Board at a future date via a simple majority vote.

The Foundation is considered a component unit of OCFA, because the nature and significance of its relationship with OCFA is such that its exclusion would cause OCFA's financial statements to be misleading or incomplete. Within these financial statements, the Foundation is reported as a discrete component unit in the government-wide financial statements. The Foundation also issues separate, component unit financial statements that may be obtained through written request from the OCFA Finance Division at 1 Fire Authority Road, Irvine, California 92602.

(b) Measurement Focus and Basis of Accounting

Government-wide Financial Statements

The government-wide financial statements (i.e., the Statement of Net Position and the Statement of Activities), report information about the OCFA as a whole, excluding its fiduciary activities. For the most part, the effect of the interfund activity has been removed from these statements.

The Statement of Activities demonstrates the degree to which the direct expenses of the given function are offset by program revenues. Direct expenses are those that are clearly identifiable with a specific function. Program revenues include (1) charges to customers or applicants who purchase, use, or directly benefit from goods, services, or privileges provided by a given function and (2) grants and contributions that are restricted to meeting the operational or capital requirements of a particular function. Taxes and other items not properly included among program revenues are reported instead as general revenues.

The government-wide financial statements are reported using the *economic resources measurement focus* and the *accrual basis of accounting*. Revenues are recorded when earned and expenses are recorded when a liability is incurred, regardless of the timing of related cash flows. Property taxes are recognized as revenues in the year for which they are levied. Grants and similar items are recognized as revenue as soon as all eligibility requirements imposed by the provider have been met.

Fund Financial Statements

Separate financial statements are provided for governmental funds and fiduciary funds, even though the latter are excluded from the government-wide financial statements. Major individual governmental funds are reported as separate columns in the fund financial statements.

Governmental fund financial statements are reported using the *current financial resources measurement focus* and the *modified accrual basis of accounting*. Revenues are recognized when they are both measurable and available. Revenues are considered available when they are collectible within the current period or soon enough thereafter to pay liabilities of the current period. OCFA considers revenues to be available if they are typically collected within 180 days of the end of the current fiscal period, with the exception of property taxes, which are considered available if they are typically collected within 60 days of the end of the current fiscal period. Expenditures generally are recorded when a liability is incurred under the accrual basis of accounting. However, debt service expenditures, as well as expenditures related to compensated absences and claims and judgments, are recorded only when payment is due.

Property taxes, charges for services, and interest associated with the current fiscal period are all considered to be susceptible to accrual and so have been recognized as revenues of the current fiscal period. All other revenue items are considered to be measurable and available only when cash is received by OCFA.

Fiduciary fund financial statements are reported using the same *economic resources measurement focus* and the *accrual basis of accounting* described for the government-wide financial statements.

(c) Major Funds and Other Fund Types

Major Governmental Funds

Major funds are those whose revenues, expenditures, assets, or liabilities are at least 10% of corresponding totals for all governmental funds. The General Fund is always a major fund. OCFA has elected to report all of its governmental funds as major funds.

- The **General Fund** is the primary operating fund of the OCFA and is used to account for all financial resources not accounted for and reported in another fund. The General Fund accounts for the financial activities of providing fire suppression, protection, prevention, and related services to OCFA's member cities and unincorporated areas. The primary sources of revenue are property taxes for fire protection (Structural Fire Fund), cash contracts, intergovernmental reimbursements, and various user fees.

- The **Communications and Information Systems Fund** is a capital projects fund used to account for the significant acquisition, improvement, or replacement of specialized communications and information technology systems and/or equipment.

- The **Fire Apparatus Fund** is a capital projects fund used to account for the significant acquisition, improvement, or replacement of fire apparatus, including vehicles, trailers, and helicopters.

- The **Fire Stations and Facilities Fund** is a capital projects fund used to account for the significant acquisition, improvement, replacement, or construction of fire stations and facilities.

Fiduciary Fund Types

- **Pension Trust Funds** are used to report resources that are required to be held in trust for the members and beneficiaries of defined benefit pension plans, defined contribution plans, other post-employment benefit plans, or other employee benefit plans. OCFA's pension trust fund accounts for the cost of the extra help post-employment defined benefit retirement plan.

(d) Cash and Investments

OCFA's cash and cash equivalents are considered to be cash on hand, demand deposits, and short-term investments with original maturities of three months or less from the date of acquisition. For

financial statement presentation purposes, cash and cash equivalents are shown as both restricted and unrestricted cash and investments.

Investments are stated at fair value (the price that would be received to sell an asset or paid to transfer a liability in an orderly transaction between market participants), in accordance with GASB Statement No. 72. OCFA's policy is generally to hold investments until maturity. The State Treasurer's Investment Pool operates in accordance with appropriate state laws and regulations. The reported value of the pool is the same as the fair value of the pool shares.

(e) Receivables

All accounts receivable are shown net of an allowance for uncollectible amounts.

Under California law, counties assess and collect property taxes up to 1% of assessed value and can increase the property tax rate no more than 2% per year. The property taxes go into a pool and are then allocated to the cities and local government entities based on complex formulas. The County bills and collects the property taxes and distributes them to OCFA in installments during the year. Accordingly, OCFA accrues only those taxes which are received from the County within 60 days after year-end. A summary of the property tax calendar is as follows:

Lien date	January 1
Levy date	Fourth Monday of September
Due dates	November 1 and February 1
Delinquent dates	December 10 and April 10

(f) Prepaid Costs and Inventories

Certain payments to vendors reflect costs applicable to future accounting periods and are recorded as prepaid costs in both the government-wide and fund financial statements. OCFA accounts for all prepaid items (i.e., warranties, annual maintenance fees, and professional memberships) under the "consumption method." This means that expenditures are recognized proportionately over the period that the services are provided. Nonspendable fund balance in an amount equal to prepaid costs is reported in the governmental fund types, since these amounts are not in a spendable form.

OCFA accounts for all supplies inventories (i.e., office supplies, automotive parts, vehicle and jet fuel, etc.) under the "purchase method." This means that expenditures are recognized at the time they are purchased, rather than when they are consumed or used.

(g) Capital Assets

Capital assets of governmental activities, which include property, plant, and equipment assets, are reported in the government-wide financial statements. Capital assets are defined by OCFA as assets with an estimated useful life in excess of one year and with an initial, individual cost of $5,000. Such assets are recorded at historical cost or estimated historical cost if purchased or constructed. Donated or developer-contributed capital assets are recorded at estimated fair market value at the date of donation. The costs of normal maintenance and repairs that do not materially add to the value of the asset or materially extend the asset's useful life are not capitalized. Major outlays for

capital assets and improvements are capitalized as projects are constructed. OCFA's capital assets are depreciated or amortized using the straight-line method over the following estimated useful lives:

Buildings and Improvements	45 years
Equipment	3 – 40 years
Vehicles	4 – 20 years

(h) Deferred Outflows and Inflows of Resources

In addition to assets, the Statement of Net Position of governmental activities and the Balance Sheet of governmental funds may report a separate section for deferred outflows of resources. Deferred outflows of resources represent a consumption of net position or fund balance that apply to future period(s) and so will not be recognized as outflows of resources (expenses or expenditures) during the current fiscal year. OCFA currently reports deferred outflows pertaining to pensions on the Statement of Net Position of governmental activities.

In addition to liabilities, the Statement of Net Position of governmental activities and the Balance Sheet of governmental funds may report a separate section for deferred inflows of resources. Deferred inflows of resources represent an acquisition of net position or fund balance that apply to future period(s) and so will not be recognized as inflows of resources (revenues) during the current fiscal year. Unavailable revenue in the governmental funds, which arises under the modified accrual basis of accounting, is currently the only item that qualifies for reporting as a deferred inflow. OCFA's governmental funds typically report unavailable revenues from two sources – intergovernmental and charges for services. These amounts will be recognized as an inflow of resources in the period that the amounts become available. OCFA also currently reports deferred inflows pertaining to pensions on the Statement of Net Position of governmental activities.

(i) Compensated Absences

OCFA's policy permits employees to accumulate earned but unused vacation and sick pay benefits. All vacation pay and unpaid sick leave to which employees are entitled under their respective Memorandums of Understanding (MOU's) has been accrued when incurred in the government-wide and fiduciary fund financial statements. A liability for these amounts is reported in governmental funds only if it has matured (for example, as a result of employee resignations or retirements).

(j) Long-term Obligations

Long-term debt and other long-term obligations are reported as liabilities of governmental activities in the government-wide Statement of Net Position, and issuance costs are recognized as an expense in the Statement of Activities in the period incurred. Bond premiums and discounts are deferred and amortized over the life of the bonds using the straight-line method. Bonds payable are reported net of the applicable bond premium or discount.

In the fund financial statements, governmental fund types recognize bond premiums and discounts, as well as bond issuance costs, during the current period. The face amount of debt issued is reported as other financing sources. Premiums received on debt issuances are reported as other financing sources while discounts on debt issuances are reported as other financing uses. Issuance costs,

whether or not withheld from the actual debt proceeds received, are reported as debt service expenditures.

(k) Pensions

For purposes of measuring the net pension liability and deferred outflows/inflows of resources related to pensions and pension expense, information about the fiduciary net position of the Orange County Employees Retirement System (OCERS) plan and additions to/deductions from the plan's fiduciary net position have been determined on the same basis as they are reported by OCERS. For this purpose, benefit payments (including refunds of employee contributions) are recognized when due and payable in accordance with the benefit terms. Investments are reported at fair value.

(l) Fund Equity

The components of the fund balances of governmental funds reflect the component classifications described below.

- **Nonspendable** fund balance includes amounts that are not in a spendable form, such as prepaid items or supplies inventories, or that are legally or contractually required to remain intact, such as principal endowments.

- **Restricted** fund balance includes amounts that are subject to externally enforceable legal restrictions imposed by outside parties (i.e., creditors, grantors, contributors) or that are imposed by law through constitutional provisions or enabling legislation.

- **Committed** fund balance includes amounts whose use is constrained by specific limitations that the government imposes upon itself, as determined by a formal action of the highest level of decision-making authority. The Board of Directors serves as OCFA's highest level of decision-making authority and has the authority to establish, modify, or rescind a fund balance commitment via a minutes order, which may or may not be documented by a written Board resolution.

- **Assigned** fund balance includes amounts intended to be used by OCFA for specific purposes, subject to change, as established either directly by the Board of Directors or by management officials to whom assignment authority has been delegated by the Board of Directors. OCFA's Board of Directors has established a *Fund Balance Assignment Policy* which establishes the authority by which OCFA may set aside cumulative resources in fund balance for an intended future use. The Board of Directors has the authority to assign fund balance, and has delegated its authority to assign amounts for workers' compensation and the capital improvement program to the Assistant Chief of Business Services, or her designee, in accordance with the parameters outlined in the policy and subject to annual review and concurrence by the Budget and Finance Committee.

- **Unassigned** fund balance is the residual classification that includes spendable amounts in the General Fund that are available for any purpose.

When expenditures are incurred for purposes for which both restricted and unrestricted (committed, assigned or unassigned) fund balances are available, the OCFA's *Flow Assumptions Policy* specifies that restricted revenues will be applied first. When expenditures are incurred for purposes for which committed, assigned, or unassigned fund balances are available, OCFA's policy is to apply committed fund balance first, then assigned fund balance, and finally unassigned fund balance.

(m) Operating Contingency

In June 1998, OCFA established a General Fund Contingency Reserve ("operating contingency") at 15% of budgeted operating revenues, which was subsequently revised to 10% of budgeted non-grant operating expenditures. OCFA's policy states that the operating contingency be used only for operating contingencies, emergencies caused by calamitous events, and economic uncertainty. The operating contingency's balance is included within the unassigned fund balance category of the General Fund.

(n) Prior Year Data

The information included in the accompanying financial statements for the prior year has been presented for comparison purposes only and does not represent a complete presentation in accordance with generally accepted accounting principles. Certain minor reclassifications of prior year data have been made in order to enhance their comparability with current year figures.

(o) Use of Estimates

The financial statements are prepared in conformity with accounting principles generally accepted in the United States of America and, accordingly, include amounts that are based on management's best estimates and judgments. Actual results could differ from those estimates.

(2) Compliance and Accountability

(a) Budgetary Information

OCFA establishes accounting control through formal adoption of an annual operating budget for its governmental funds. The operating budgets are prepared on a basis consistent with generally accepted accounting principles. Annual appropriated budgets are adopted for all of OCFA's governmental funds.

Perspective differences occur when the framework used for budgeting differs from the fund structure used for financial reporting. OCFA's General Fund consists of four separately-budgeted funds that have been combined and consolidated for financial statement presentation. The table below reconciles fund balance for the General Fund as reported on the budgetary basis to the presentation in the financial statements. The Supplementary Schedules section of this report includes additional General Fund combining schedules for balance sheet, budgetary data, and actual operating data for the year ended June 30, 2016.

	Fund Balance as of June 30, 2016
Budgetary basis:	
General Operating Fund	$ 73,992,052
General Fund Capital Improvement Program (CIP)	4,761,135
Structural Fire Entitlement	584,464
Self Insurance	73,720,054
General Fund for financial statement presentation	$153,057,705

The adopted budget can be amended by the Board to change both appropriations and estimated revenues as unforeseen circumstances come to management's attention. Increases and decreases in revenue and appropriations and transfers between funds require the Board's approval; however, division and section managers, Assistant Chiefs, and Directors may authorize changes within funds and/or their respective authorized budgets. Expenditures may not exceed total appropriations at the individual fund level. It is the practice of OCFA to review the budgets mid-year and, if necessary, recommend changes to the Board. The following is a summary of the originally adopted expenditure budget (including carryovers of unexpended prior year encumbrances and transfers out) compared to the final budget by budgeted fund:

Fund	Original Budget	Increase/ (Decrease)	Final Budget
General Fund	$328,146,087	$13,934,644	$342,080,731
Communications and Information Systems	6,625,685	(4,831,152)	1,794,533
Fire Apparatus	18,042,177	1,532,139	19,574,316
Fire Stations and Facilities	854,248	51,829	906,077
Total budgeted governmental funds	$353,668,197	$10,687,460	$364,355,657

(b) Emergency Appropriations Policy

In September 2008, the Board adopted the Emergency Appropriations Policy to provide a means of increasing budgeted appropriations in the event that extraordinary fire or emergency incident activity occurs after the last Board meeting of the fiscal year, which may cause expenditures to exceed the authorized General Fund budget. The contingency appropriation, which may not exceed $3,000,000 each fiscal year, is established for unforeseen requirements, primarily salary and employee benefits for extraordinary fire or emergency response. No expenditures may be made directly against the contingency appropriations; however, OCFA management may recommend a transfer from the contingency appropriations to a specific purpose appropriation. The Chair of the Board of Directors or the Vice Chair, in the absence of the Chair, must pre-approve any such transfers. Upon approval by the Chair or Vice Chair, notice of this transfer must be provided immediately to the full Board in writing. There were no transfers made from the contingency appropriations during the year ended June 30, 2016; therefore, the budgetary comparison statements and schedules included in the financial statements do not reflect any increase to the final budgeted expenditures.

(c) Encumbrance Accounting

Encumbrance accounting is employed in governmental funds. Encumbrances represent commitments related to unperformed contracts for goods or services. Encumbrance accounting, under which purchase orders, contracts, and other commitments for the expenditure of resources are recorded to reserve that portion of the applicable appropriation, is utilized in OCFA's funds. Encumbrances outstanding at year-end are reported as restricted, committed, or assigned fund balance, depending on the type of revenue source associated with the encumbrance, and do not constitute expenditures or liabilities because the commitments will be honored during the subsequent year. All appropriations lapse at year-end with the exception of encumbered appropriations, which are effectually re-appropriated in the ensuing year's budget.

(3) Prior Period Adjustment

In response to concerns from OCFA's member agencies about the relationship of financial contributions to level of service received, an Equity Working Group was established to identify methods for mitigating these equity concerns. In September 2013, the Board of Directors approved a solution presented by the Equity Working Group, which required OCFA to issue equity payments from unrestricted revenue sources to qualifying Structural Fire Fund member agencies, based on a calculation of average Structural Fire Fund Tax rate. The solution also required that the City of Irvine, OCFA's largest Structural Fire Fund member in terms of property tax revenue, remain a member of OCFA until the year 2030. By November 2013, two thirds of the OCFA member agencies had approved the 2nd Amendment to the Joint Powers Agreement (2nd Amendment), and OCFA began to implement the new required equity measures.

The Board of Directors also approved requesting a judicial review of the 2nd Amendment to seek court validation. The validation process, which was initiated in December 2013, would affirm the ability to use unrestricted revenue sources for purposes of issuing equity payments to qualifying agencies, and would preclude any future challenges to the legality of the 2nd Amendment. In August 2014, an Orange County Superior Court judge ruled against the OCFA in a validation hearing, stating that the 2nd Amendment was invalid and unenforceable as a matter of law. OCFA appealed the decision, but in March 2016 the appellate court issued an opinion affirming the invalidation of the 2nd Amendment.

As of June 30, 2015, OCFA had either paid or accrued as a liability all jurisdictional equity adjustment payments, plus interest, due to Structural Fire Fund members under the provisions of the 2nd Amendment as follows:

Government Agency	Amounts Paid	Unpaid, Accrued Equity Payments	Accrued Interest	Total
City of Irvine	$2,988,081	$9,501,321	$15,861	$12,505,263
City of Laguna Woods	-	5,616	5	5,621
City of Lake Forest	-	155	-	155
City of Rancho Santa Margarita	-	135,571	128	135,699
County of Orange	-	335,293	317	335,610
Total	$2,988,081	$9,977,956	$16,311	$12,982,348

The appellate court's opinion had the effect of nullifying the 2nd Amendment and, consequently, all amounts previously paid and/or accrued totaling $12,982,348 were considered invalid. As a result, during the year ended June 30, 2016, OCFA restated the beginning net position of its governmental activities and the beginning fund balance of its General Fund as follows:

	Governmental Activities	Governmental Funds
	Net Position	General Fund Fund Balance
As previously reported	$(169,124,373)	$120,273,257
Prior period adjustment	12,982,348	12,982,348
As restated	$(156,142,025)	$133,255,605

(4) Cash and Investments

(a) Financial Statement Presentation

OCFA maintains a cash and investment pool that is available for use for all funds. Each fund's position in the pool is reported on the combined balance sheet as cash and investments.

Cash and investments as of June 30, 2016, are reported in the accompanying financial statements as follows:

Statement of Net Position:	
Governmental activities	$177,729,367
Discretely presented component unit – OCFA Foundation	108,718
Statement of Fiduciary Net Position:	
Fiduciary funds	74,798
Total cash and investments	$177,912,883

Cash and investments consist of the following as of June 30, 2016:

Petty cash / cash on hand	$ 13,445
Demand deposits	(861,686)
Investments	178,761,124
Total cash and investments	$177,912,883

(b) Demand Deposits

At June 30, 2016, the carrying amount of the OCFA's demand deposits was $(861,686) and the bank balance was $1,137,419. The $1,999,105 difference represents outstanding checks and other reconciling items.

The California Government Code requires California banks and savings and loan associations to secure an entity's deposits by pledging government securities with a value of 110% of an entity's deposits. California law also allows financial institutions to secure entity deposits by pledging first

trust deed mortgage notes having a value of 150% of an entity's total deposits. The entity's Treasurer may waive the collateral requirement for deposits which are fully insured by the FDIC. The collateral for deposits in federal and state chartered banks is held in safekeeping by an authorized agent of depository recognized by the State of California Department of Banking. The collateral for deposits with savings and loan associations is generally held in safekeeping by the Federal Home Loan Bank in San Francisco, California as an agent of depository. These securities are physically held in an undivided pool for all California public agency depositors. Under Government Code Section 53655, the placement of securities by a bank or savings and loan association with an "agent of depository" has the effect of perfecting the security interest in the name of the local governmental agency. Accordingly, all collateral held by California agents of depository are considered to be held for, and in the name of, the local government. The OCFA Treasurer may waive the collateral requirement for deposits that are fully insured up to $250,000 by the FDIC.

(c) Investments Authorized by Government Code and OCFA Investment Policy

The table below identifies investment types that are authorized by OCFA's investment policy and by California Government Code Section 53600 et seq. and Section 5922(d). The table also identifies provisions of the California Government Code (or OCFA's investment policy, if more restrictive) that address interest rate risk, credit risk, and concentration of credit risk. The table, however, does not cover investments of debt proceeds, if any, held by fiscal agent, which are governed by the provisions of debt agreements of OCFA rather than the general provisions of OCFA's investment policy. In addition, this table does not include other investment types that are allowable under the California Government Code but are not specifically authorized by OCFA's investment policy.

Investment Types	Maximum Maturity	Maximum % of Portfolio in Investment Type	Maximum % of Portfolio in Single Issuer
U.S. Treasury obligations	5 years	100%	100%
Federal agency securities	5 years	75%(1)	75%(1)
Bankers' acceptances	180 days	25%(1)	25%(1)
Commercial paper	270 days	15%(1)	15%(1)
Negotiable certificates of deposit	5 years	25%(1)	25%(1)
Repurchase agreements	14 days(1)	15%(1)	15%(1)
Money market mutual funds	n/a	15%(1,2)	15%(1,2)
Local Agency Investment Fund	n/a	75%(1)	75%(1)

(1) Based on OCFA investment policy requirement, which is more restrictive than state law
(2) No limit on automatic overnight sweep

(d) Investments Authorized by Debt Agreements

Proceeds of bonds or other indebtedness and any moneys set aside and pledged to secure payment of bonds may be invested in accordance with the resolution, indenture, or statutory provisions governing the issuance of the indebtedness. OCFA did not have any investments held by fiscal agent during Fiscal Year 2015/16.

(e) Investments in State Investment Pool

OCFA is a voluntary participant in the Local Agency Investment Fund (LAIF) that is regulated by California Government Code Section 16429 under the oversight of the Treasurer of the State of California. LAIF is overseen by the Local Agency Investment Advisory Board, which consists of five members in accordance with State statute. The State Treasurer's Office audits the fund annually. The fair value of the position in the investment pool is the same as the value of the pool shares.

(f) GASB Statement No. 72

OCFA adopted GASB Statement No. 72, *Fair Value Measurement and Application*, as of July 1, 2015. GASB Statement No. 72 establishes general principles for measuring fair value and standards of accounting and financial reporting for assets and liabilities measured at fair value. Fair value is the price that would be received to sell an asset or paid to transfer a liability in an orderly transaction between market participants at the measurement date. OCFA categorizes its fair value measurements within the fair value hierarchy established by generally accepted accounting principles. The hierarchy is based on the valuation inputs used to measure the fair value of the asset. Level 1 inputs are quoted prices in active markets for identical assets. Level 2 inputs are significant other observable inputs. Level 3 inputs are significant unobservable inputs.

OCFA has the following fair value measurements for its investments as of June 30, 2016:

	Fair Value Hierarchy Level			
	Level 1	Level 2	Level 3	Fair Value
Federal agency securities	$ -	$108,052,480	$ -	$108,052,480
Money market mutual funds	-	6,560,578	-	6,560,578
LAIF	-	64,148,066	-	64,148,066
Total	$ -	$178,761,124	$ -	$178,761,124

All of OCFA's investments are valued using Level 2 inputs. Federal agency securities are valued using institutional bond quotes. Money market investments that have a remaining maturity at the time of purchase of one year or less and are held by governments other than external investment pools, and investments held by 2a7-like external investment pools, are measured at amortized cost as provided in GASB Statement No. 31, *Accounting and Financial Reporting for Certain Investments and for External Investment Pools*. The fair value of LAIF is measured using a Net Asset Value (NAV) calculation determined by the pool.

(g) Credit Risk

Generally, credit risk is the risk that an issuer of an investment will not fulfill its obligation to the holder of the investment. This is measured by the assignment of a rating by a nationally recognized statistical rating organization. Presented below is the minimum rating required (where applicable) by the California Government Code, OCFA's investment policy, or debt agreements, as well as the actual rating as of year-end for each investment type.

	Minimum Rating Required	Rating at Year-End: Aaa/ AA+/ AAA	Unrated	Fair Value
Federal agency securities	N/A	$108,052,480	$ -	$108,052,480
Money market mutual funds	Aaa/AAA	-	6,560,578	6,560,578
LAIF	N/A	-	64,148,066	64,148,066
Total		$108,052,480	$70,708,644	$178,761,124

(h) Custodial Credit Risk

The custodial credit risk for *deposits* is the risk that in the event of the failure of a depository financial institution, a government will not be able to recover deposits or will not be able to recover collateral securities that are in the possession of an outside party. OCFA's investment policy requires that collateral be held by an independent third party with whom OCFA has a current custodial agreement. The custodial credit risk for *investments* is the risk that in the event of the failure of the counterparty to a transaction, a government will not be able to recover the value of investment or collateral securities that are in the possession of an outside party. OCFA's investment policy requires that all security transactions are conducted on a delivery-versus-payment (DVP) method and that all securities are held by a qualified, third-party custodian, as evidenced by safekeeping receipts. The trust department of OCFA's bank may act as third-party custodian, provided that the custodian agreement is separate from the banking agreement. As of June 30, 2016, none of the OCFA's deposits or investments was exposed to disclosable custodial credit risk.

(i) Concentration of Credit Risk

OCFA's investment policy imposes restrictions for certain types of investments with any one issuer to 15% of the total investment pool with the following exceptions: U.S. Treasury obligations (100%), LAIF (75%), federal agency securities (75%), bankers' acceptances (25%), and negotiable certificates of deposit (25%). With respect to concentration risk as of June 30, 2016, the OCFA is in compliance with the investment policy's restrictions. In addition, GASB Statement No. 40 requires a separate disclosure if any single issuer comprises more than 5% of the total investment value (exclusive of amounts held by fiscal agent). Investments guaranteed by the U.S. government and investments in mutual funds and external investment pools are excluded from this requirement. Investments with issuers exceeding 5% of the total investment portfolio at June 30, 2016, are summarized below.

Issuer	Fair Value	% of Portfolio
Federal Home Loan Bank (FHLB)	$52,988,280	29.6%
Freddie Mac	28,056,700	15.7%
Federal Farm Credit Bank (FFCB)	27,007,500	15.1%

(j) Interest Rate Risk

Interest rate risk is the risk that changes in market interest rates will adversely affect the fair value of an investment. Generally, the fair values of investments with longer maturities have greater sensitivity to changes in market interest rates. OCFA's investment policy limits investment

maturities as a means of managing its exposure to fair value losses arising from increasing interest rates. OCFA's investment policy states that at least 50% of the portfolio must mature in one year or less, and unless matched to a specific requirement and approved by the Executive Committee and the Board of Directors, no portion of the portfolio may exceed five years. OCFA has elected to use the segmented time distribution method of disclosure for its interest rate risk. As of June 30, 2016, the OCFA had the following investments and maturities:

	Investment Maturities in Months			
	6 or Less	7 to 12	13 to 60	Fair Value
Federal agency securities	$ 55,978,650	$ -	$52,073,830	$108,052,480
Money market mutual funds	6,560,578	-	-	6,560,578
LAIF	64,148,066	-	-	64,148,066
Total	$126,687,294	$ -	$52,073,830	$178,761,124

As of June 30, 2016, OCFA's investments included the following callable investments, which are considered to be exposed to interest rate risk:

Issuer	Call Date(s)	Yield to Call	Maturity Date	Fair Value
Freddie Mac	8/28/2016	0.827%	11/28/2017	$10,008,100
Federal Farm Credit Bank (FFCB)	Anytime	0.559%	10/15/2018	10,000,200
Federal Farm Credit Bank (FFCB)	9/6/2016	0.816%	9/6/2018	8,007,120
Federal Home Loan Bank (FHLB)	8/10/2016	0.662%	8/10/2018	6,003,780

(5) Accounts Receivable

Accounts receivable, net of an allowance for doubtful accounts, consists of the following as of June 30, 2016:

	Governmental Funds			Component Unit
	General Fund	Fire Apparatus	Total	OCFA Foundation
Fire prevention/late fees	$ 644,252	$ -	$ 644,252	$ -
Ambulance/other reimbursements	1,959,330	-	1,959,330	-
Due from developers	-	124,200	124,200	-
Other/miscellaneous	33,204	-	33,204	90
Accounts receivable	2,636,786	124,200	2,760,986	90
Allowance for doubtful accounts	(194,216)	-	(194,216)	-
Accounts receivable, net	$2,442,570	$124,200	$2,566,770	$90

(6) Due from Other Governments

Amounts due from other governments, net of an allowance for doubtful accounts, consist of the following as of June 30, 2016:

	Governmental Funds	Primary Government
	General Fund	Governmental Activities
Fire protection and other services:		
Cash contract cities – leave balances and other contract costs	$ 182,553	$ 1,804,269
State responsibility area	1,465,902	1,465,902
Airport rescue firefighting	745,391	745,391
Other services	136,489	136,489
Subtotal	2,530,335	4,152,051
Assistance by hire/activation	4,096,172	4,096,172
Grants	392,284	392,284
Property tax/tax increment	3,054,319	3,054,319
Other/miscellaneous	100,000	100,000
Due from other governments	10,173,110	11,794,826
Allowance for doubtful accounts	(122,855)	(122,855)
Due from other governments, net	$10,050,255	$11,671,971

(7) Due to Other Governments

As of June 30, 2016, due to other governments totaling $123,047, as reported in both the governmental activities and the governmental funds (General Fund), consists of amounts payable to the County of Orange in conjunction with bankruptcy proceeds.

(8) Unearned and Unavailable Revenue

Unavailable revenue in the governmental funds consists of amounts that are considered *unavailable* to finance the expenditures of the current fiscal period. Only the amounts that are *unearned* are reported as liabilities of governmental activities. Unearned revenues consist of the following as of June 30, 2016:

	Governmental Funds	Primary Government	Component Unit
	General Fund	Governmental Activities	OCFA Foundation
Unearned revenue:			
Helicopter hangar rental deposits	$16,612	$16,612	$ -
Helicopter hangar rent – July 2016	10,699	10,699	-
Cell tower rent – July 2016	3,605	3,605	-
Miscellaneous cash advances	2,200	2,200	6,000
Total	$33,116	$33,116	$6,000

(9) Fund Balance of Governmental Funds – Nonspendable

Prepaid costs are reported as an asset until the expenditures are recognized proportionately over the future period in which the services are to be provided. An amount equal to the asset is reported as nonspendable fund balance in the governmental funds, since these amounts are not in a spendable form.

Nonspendable fund balance consists of the following as of June 30, 2016:

	General Fund
Retirement contributions:	
Fiscal Year 2016/17	$35,000,000
Fiscal Year 2015/16	1,136,149
Maintenance and support	513,268
Warranties	25,540
Subscriptions and memberships	39,840
Other	65,048
Total	$36,779,845

In January 2015, OCFA prepaid a portion of its Fiscal Year 2015/16 retirement contributions to the Orange County Employees Retirement System (OCERS) totaling $29,539,884. In October 2015 and January 2016, OCFA prepaid a portion of its Fiscal Year 2016/17 retirement contributions to OCERS totaling a combined $35,000,000. The prepayments produced savings of over $1.7 million in Fiscal Year 2015/16, and are expected to produce savings of over $2.0 million in Fiscal Year 2016/17. Due to the timing of the pay period calendar, the unamortized balance of the January 2015 prepayment totaled $1,136,149 as of June 30, 2016. The entire amount of the October 2015 and January 2016 prepayments was unamortized as of June 30, 2016. Other prepaid items as of June 30, 2016, included various equipment warranties on mobile data computers, laptops, computers, pagers, tablets, and monitors; and other amounts such as annual maintenance and support fees, subscriptions, and professional memberships.

(10) Fund Balance of Governmental Funds – Restricted

Restricted fund balance in the General Fund includes grant-funded or other restricted, unexpended encumbrances outstanding at year-end, as well as donations received for specific programs. Restricted fund balance in the Fire Stations and Facilities Fund includes CALFIRE contract revenues that are legally restricted for new fire station development or improvements to existing fire stations. Restricted fund balance consists of the following as of June 30, 2016:

	General Fund	Fire Stations and Facilities	
	Operations Department	Capital Improvement Program	Total
Purpose of encumbrances:			
Urban Search and Rescue grant program	$ 5,777	$ -	$ 5,777
California Joint Apprenticeship Committee	5,511	-	5,511
	11,288	-	11,288
Donations – disaster preparation academy	2,579	-	2,579
CALFIRE station(s)	-	533,232	533,232
Total	$13,867	$533,232	$547,099

(11) Fund Balance of Governmental Funds – Committed

In July 1999, the Board of Directors authorized that $4,405,086 be set aside to fund OCFA-related service or resource enhancement projects in certain structural fire fund cities. In January 2012, the Board of Directors authorized an additional $622,106 to be set aside for the same purpose. As of June 30, 2016, the remaining unspent amount totaling $584,464 was reported as a fund balance commitment in the General Fund. The funds are committed for projects in the following cities:

City	General Fund
Aliso Viejo	$ 281
Irvine	530,971
Laguna Niguel	53,212
Total	$584,464

(12) Fund Balance of Governmental Funds – Assigned

Assigned fund balance includes the following as of June 30, 2016:

Capital Improvement Program	$ 53,746,805
Workers' compensation	73,720,054
Assigned, unexpended encumbrances	7,235,814
Total	$134,702,673

The Board of Directors has established a *Fund Balance Assignment Policy* authorizing the assignment of fund balance to the Capital Improvement Program and self-insured workers' compensation claims.

- The assignment to the Capital Improvement Program reflects cumulative amounts transferred from the General Fund to the capital projects funds, net of actual cumulative project expenditures and other revenue sources accounted for in those funds. The assignment may also include net resources accumulated within the General Fund itself in order to fund purchases and projects that are capital in nature but do not necessarily meet the criteria to be reported in one of OCFA's capital projects funds. The assignment may not exceed the net cost of future identifiable projects. Fund balance assigned for the Capital Improvement Program totaled $53,746,805 as of June 30, 2016, and is reported in the General Fund ($4,668,314), Communications and Information Systems Fund ($18,977,557), Fire Apparatus Fund ($14,788,654) and Fire Stations and Facilities Fund ($15,312,280).

- The assignment to workers' compensation reflects the cumulative difference between actual workers' compensation expenditures incurred and budgeted costs, which are based on an annual actuarial valuation prepared by an external actuary and a confidence level set by the Board of Directors. The assignment for workers' compensation is reported in the General Fund and totaled $73,720,054 as of June 30, 2016.

Assigned fund balance pertaining to unexpended encumbrances outstanding as of June 30, 2016, totaled $7,235,814 and is summarized below for each governmental fund:

Purpose of Encumbrance	Communications and Information Systems Communications and IT Projects	Fire Apparatus Fire Apparatus and Other Vehicles	Fire Stations and Facilities Construction Projects
100' tractor drawn aerials	$ -	$5,227,858	$ -
Paramedic squads and Type 6 brush patrols	-	1,203,215	-
Pickup trucks	-	232,534	-
RFOTC audio visual upgrade design	24,715	-	-
Structural design and documents for Urban Search and Rescue warehouse improvements	-	-	13,135
Total	$24,715	$6,663,607	$13,135

Purpose of Encumbrance	General Fund								
	Executive Management	Operations Department	Community Risk Reduction Department	Business Services	Support Services Department	Organizational Planning Department	Facilities Projects	Communications and IT Projects	Total
Wildland clothing	$ -	$ -	$ -	$63,724	$ -	$ -	$ -	$ -	$ 63,724
Electric reach truck	-	-	-	41,056	-	-	-	-	41,056
Honor guard uniforms	25,682	-	-	-	-	-	-	-	25,682
Swift water clothing	-	25,202	-	-	-	-	-	-	25,202
Laptops	-	-	-	-	-	-	-	24,172	24,172
Computers, monitors, and speakers	-	-	-	-	-	-	-	22,680	22,680
Auto data updater license	-	-	-	-	-	21,000	-	-	21,000
Sharepoint support	-	-	-	-	19,350	-	-	-	19,350
E-mail security and support	-	-	-	-	17,200	-	-	-	17,200
Vehicle repairs	-	-	-	-	16,077	-	-	-	16,077
Code books	-	-	15,845	-	-	-	-	-	15,845
Galvanized guardrails	-	-	-	-	-	-	15,585	-	15,585
Other	11,008	26,282	-	57,919	67,116	-	54,402	10,057	226,784
Total	$36,690	$51,484	$15,845	$162,699	$119,743	$21,000	$69,987	$56,909	$534,357

(13) Fund Balance of Governmental Funds – Unassigned

Unassigned fund balance in the General Fund consists of the following as of June 30, 2016:

10% Operating Contingency	$28,778,587
All other residual amounts available for any purpose	7,978,217
Total	$36,756,804

(14) Interfund Transfers

Interfund transfers are used to move revenues from the fund required by statue or budget to collect them to the fund required by statute or budget to expend them. Interfund transfers for the year ended June 30, 2016, are as follows:

Fund	Transfers In	Transfers Out
General Fund	$ -	$78,187
Communications and Information Systems	78,187	-
Total	$78,187	$78,187

Transfers were made from the General Fund to the Communications and Information Systems Fund for current and future capital improvement projects identified in the Capital Improvement Plan.

(15) Capital Assets

(a) Changes in Capital Asset Balances by Asset Class

Capital asset activity of the OCFA Foundation for the year ended June 30, 2016, was as follows:

Component Unit/ OCFA Foundation	Beginning Balances	Increases	Decreases	Transfers	Ending Balances
Capital assets depreciated/amortized:					
Equipment	$ -	$ 10,000	$ (10,000)	$ -	$ -
Capital assets, net	$ -	$ 10,000	$ (10,000)	$ -	$ -

Capital asset activity of OCFA's governmental activities for the year ended June 30, 2016, was as follows:

Primary Government/ Governmental Activities	Beginning Balances	Increases	Decreases	Transfers	Ending Balances
Capital assets not depreciated/amortized:					
Land	$ 37,887,850	$ -	$ -	$ -	$ 37,887,850
Construction in progress	5,092,288	101,752	-	(5,091,699)	102,341
Work in progress	4,121,289	2,718,052	-	(4,043,637)	2,795,704
Total capital assets not depreciated/amortized	47,101,427	2,819,804	-	(9,135,336)	40,785,895
Capital assets depreciated/amortized:					
Buildings	137,772,434	-	-	5,091,699	142,864,133
Equipment	58,076,611	624,898	(131,555)	1,304,613	59,874,567
Vehicles	71,403,080	606,932	(209,265)	2,739,024	74,539,771
Subtotal	267,252,125	1,231,830	(340,820)	9,135,336	277,278,471
Less accumulated depreciation/amortization:					
Buildings	(37,322,693)	(3,166,163)	-	-	(40,488,856)
Equipment	(33,700,818)	(2,636,367)	122,185	-	(36,215,000)
Vehicles	(44,083,199)	(3,465,452)	209,265	-	(47,339,386)
Subtotal	(115,106,710)	(9,267,982)	331,450	-	(124,043,242)
Total capital assets depreciated/amortized, net	152,145,415	(8,036,152)	(9,370)	9,135,336	153,235,229
Capital assets, net	$199,246,842	$(5,216,348)	$ (9,370)	$ -	$194,021,124

(b) Net Investment in Capital Assets

The portion of the governmental activities net position that is invested in capital assets, net of related debt, is calculated as follows:

Capital assets, net of accumulated depreciation/amortization	$194,021,124
Capital-related debt – 2011 aircraft lease refinance	(6,110,447)
Net investment in capital assets	$187,910,677

(c) Capital Assets Acquired Under Capital Lease

The above amounts include assets acquired by capital lease, classified as follows by major asset class:

Equipment	$22,074,284
Vehicles	15,605,764
Total capital assets acquired under capital lease	$37,680,048

(d) Depreciation/Amortization Expense

Depreciation/amortization expense of $9,267,982 was charged to public safety in the Statement of Activities.

(16) Long-term Liabilities

(a) Changes in Long-Term Liabilities

Long-term liability activity for the year ended June 30, 2016, is summarized in the table below.

Governmental Activities	Beginning Balances	Additions	Deletions	Ending Balances	Due Within One Year
Net pension liability:					
OCERS pension plan	$466,968,323	$133,428,399	$ (82,726,916)	$517,669,806	$ -
Extra Help pension plan	240,358	-	(76,667)	163,691	-
	467,208,681	133,428,399	(82,803,583)	517,833,497	-
Capital lease purchase agreement:					
Aircraft Lease Refinance-2011	8,446,726	-	(2,336,279)	6,110,447	2,379,140
Accrued claims and judgments:					
Workers' compensation	62,372,690	6,716,066	(7,892,111)	61,196,645	7,743,304
Compensated absences	16,296,101	12,938,324	(12,215,217)	17,019,208	3,254,937
Net OPEB obligation	57,553,126	13,550,385	(4,460,115)	66,643,396	-
Total	$611,877,324	$166,633,174	$(109,707,305)	$668,803,193	$13,377,381

The capital lease purchase agreement is liquidated by the Fire Apparatus Fund. The extra help pension plan is liquidated by the Extra Help Retirement Fund. All other long-term liabilities are normally liquidated by the General Fund.

(b) Pension Plans

OCFA participates in two defined benefit pension plans that are administered through a trust or equivalent arrangement. Additional information is provided for these plans within these notes as

Note 21 and Note 22. Following is a summary of plan activities as of and for the year ended June 30, 2016:

Description	OCERS Pension Plan	Extra Help Pension Plan	Total
Net pension liability	$517,669,806	$163,691	$517,833,497
Deferred outflows of resources related to pensions	139,005,504	35,040	139,040,544
Deferred inflows of resources related to pensions	(35,819,433)	(92,134)	(35,911,567)
Pension expenditures associated with net pension liabilities (as reported in the fund financial statements)	82,726,916	10,642	82,737,558
Pension expense associated with net pension liabilities (as reported in the government-wide financial statements)	94,784,899	(15,017)	94,769,882

(c) Capital Lease Purchase Agreement – Aircraft Lease Refinance (2011)

On December 22, 2008, OCFA entered into a Master Aircraft Lease Agreement (Agreement) with SunTrust Equipment Finance & Leasing Corp. (SunTrust). Under the terms of the Agreement, $21,515,238 was deposited into an escrow account with SunTrust Bank, Inc. (SunTrust Bank) to be used by OCFA for the acquisition of certain aircraft equipment. OCFA purchased two helicopters and related equipment for a total amount of $21,538,675, using the original proceeds of the lease and $23,437 of accrued interest. The helicopters and related equipment have been capitalized as equipment in the government-wide financial statements. Title to the equipment vests with OCFA during the term of the Agreement; accordingly, the lease has been recorded as a capital lease liability of OCFA.

On November 16, 2011, the terms of the Agreement were amended to reflect a reduction in the annual interest rate from 3.7609% to 2.58%. A 1.75% prepayment premium totaling $286,599, plus accrued interest for the period September 22, 2011, through November 16, 2011, totaling $92,386, were added to the outstanding principal balance to be repaid over the remaining life of the lease. Rental payments are payable quarterly commencing March 22, 2009, and terminating on December 22, 2018. During the year ended June 30, 2016, OCFA made principal and interest payments totaling $2,336,279 and $195,444, respectively. The outstanding balance of the capital lease liability was $6,110,447 as of June 30, 2016. Future annual lease payment requirements are as follows:

Fiscal Year Ended June 30	Principal	Interest	Total
2017	$2,397,140	$134,583	$2,531,723
2018	2,459,589	72,134	2,531,723
2019	1,253,718	12,144	1,265,862
Total	$6,110,447	$218,861	$6,329,308

(d) Compensated Absences

OCFA is obligated to its employees for the following accumulated earned but unused leave benefits as of June 30, 2016:

	Vacation	Comp/Other	Sick Leave	Santa Ana General Leave	Total
Safety Members	$ 9,970,950	$169,704	$1,511,630	$1,597,640	$13,249,924
General Members	1,883,853	367,893	1,493,462	24,076	3,769,284
Total	$11,854,803	$537,597	$3,005,092	$1,621,716	$17,019,208

Sick leave includes only those amounts that OCFA is obligated to reimburse employees at the end of their active service life. On March 5, 2012, OCFA and the City of Santa Ana entered into an agreement to establish a general leave bank for transitioning personnel from the Santa Ana Fire Management Association and the Santa Ana Fire Benevolent Association with more than ten years of service. Under the terms of the agreement, transitioning employees are required to exhaust their respective OCFA accrued leave banks before utilizing general leave transferred from the city. OCFA will pay amounts due to transitioning employees who use time from the general leave bank, and the City of Santa Ana will then reimburse those amounts to OCFA. General leave is not eligible to be cashed out by employees in lieu of using the time, and is available for use through April 13, 2017. Any amounts remaining at that time will no longer be available for use by transitioning employees. The portion of OCFA's compensated absences long-term liability that is reimbursable by the City of Santa Ana is offset by a long-term receivable of an equal amount on the Statement of Net Position.

(17) Commitments and Contingencies

(a) Outstanding Encumbrances / Commitments with Vendors

As of June 30, 2016, commitments for outstanding encumbrances (unperformed purchase orders and contracts for goods and services) by major governmental fund are as follows:

General Fund	$ 545,645
Communications and Information Systems	24,715
Fire Apparatus	6,663,607
Fire Stations and Facilities	13,135
Total outstanding encumbrances	$7,247,102

Significant individual commitments with vendors as of June 30, 2016 are identified below.

Fund / Vendor	Description	Original Commitment	Spent-to-Date	Remaining Commitment
General Fund:				
Linegear Fire & Rescue	Wildland clothing	$ 63,724	$ -	$ 63,724
Southwest Material Handling, Inc.	Electric reach truck	41,056	-	41,056
Keystone Uniforms	Honor guard uniforms	25,682	-	25,682
The Rescue Source	Swift water clothing	21,573	-	21,573
Deccan, Inc.	Auto data updater license	21,000	-	21,000
Communications and Information Systems:				
TK1SC, Inc.	RFOTC audio visual upgrade design	79,750	55,035	24,715
Fire Stations and Facilities:				
KME Fire Apparatus	(4) 100’ tractor drawn aerials	5,227,858	-	5,227,858
Boise Mobile Equipment	(5) paramedic squads; (1) type 6 brush patrol	1,203,215	-	1,203,215
Lake Chevrolet	(6) Chevy Colorado pickup trucks	179,333	-	179,333
DDL Traffic, Inc.	Right-of-way preemption equipment for Chevy Colorado pickup trucks	34,642	-	34,642
Lewis/Schoeplein Architects	Structural design and documents for Urban Search and Rescue warehouse improvements	60,280	47,145	13,135

(b) Pending Litigation

OCFA is currently in the discovery phase of an employee discrimination case. OCFA's legal counsel believes that it is unlikely OCFA will obtain a favorable outcome in this case, based on the results of two related internal investigations and resulting employee discipline. However, the degree of likelihood and amount of any potential legal liability could not be determined at this time. Because the plaintiff is still fully-employed by OCFA, any damages awarded would most likely be based on emotional distress claims.

(18) Lessor in Operating Lease Agreements

(a) Aircraft Hangar Leases

OCFA has entered into Aircraft Hangar Lease agreements to provide spaces to tenants in the western portion of the OCFA-owned aircraft hangar at Fullerton Municipal Airport. The original cost of the aircraft hangar's western was $2,201,950, and the net book value was $2,055,154 as of June 30, 2016. Fiscal Year 2015/16 depreciation expense totaled $48,932. The terms of the agreements are as follows:

Lessee/Tenant	Agreement Date	Term	Initial Monthly Rent	Automatic Annual Rent Increase
Ladera Aircraft, LLC	October 30, 2013	Five Years	$4,924	2.5%
Lidar America, LLC	June 1, 2015	Five Years	$5,391	2.5%
Hangar 21 Helicopters	January 1, 2016; Amended June 1, 2016	Three Years	$5,750	0.0%

Rental revenue totaled $152,117 for Fiscal Year 2015/16. Future potential rental revenue under the terms of the leases is as follows:

Fiscal Year	Ladera Aircraft, LLC	Lidar America, LLC	Hangar 21 Helicopters	Total
2016/17	$ 63,108	$ 66,450	$ 69,000	$198,558
2017/18	64,688	68,110	69,000	201,798
2018/19	21,740	69,817	63,250	154,807
2019/20	-	65,461	-	65,461
2020/21	-	-	-	-
Total	$149,536	$269,838	$201,250	$620,624

(b) Wireless Communications Facilities Site Lease

On March 24, 2011, OCFA entered into a Wireless Communications Facilities Site Lease with Vista Towers, LLC (Vista), to provide space at the OCFA-owned Regional Fire Operations and Training Center to install and operate a digital mobile radio communications site consisting of up to two wireless communication towers, equipment shelters, and cabinets, for up to six cell phone carriers. In July 2015, the Board of Directors approved Vista's request to assign its interest in the lease to

SBA Towers VI, LLC (SBA). SBA has assumed the payment terms of the original agreement, and is responsible for the installation, construction, maintenance, repairs, replacement, and operations of the towers and, if applicable, the removal of the towers upon termination of the lease.

The lease term commenced on the earlier of the pulling of all permits necessary for construction, or September 24, 2012, and continues for five years from that date. The lease may be renewed for up to four consecutive five-year increments, for a total of twenty-five years. Rent is due the first of each month and is determined based on the number of carriers being occupied by each of the towers. SBA pays $1,250 for each month in which there is one or no carrier on one of the towers, and $1,000 per month for each additional carrier occupied on each tower beyond the first carrier. Base rent automatically increases by 3% annually.

OCFA began collecting base rent in July 2012, with rent for a second and third carrier commencing in June and October 2013, respectively. Rental revenue totaled $40,955 for Fiscal Year 2015/16. Future potential rental revenue, assuming rent for the three additional carriers may commence January 1, 2017, is as follows:

Fiscal Year(s)	Carriers 1-3	Carriers 4-6	Total
2016/17	$ 43,458	$ 19,674	$ 63,132
2017/18	44,765	40,485	85,250
2018/19	46,108	41,709	87,817
2019/20	47,497	42,966	90,463
2020/21	48,924	44,262	93,186
2021/22 - 2025/26	267,480	242,022	509,502
2026/27 - 2030/31	310,051	280,566	590,617
2031/32 - 2035/36	359,514	325,296	684,810
2036/37 - 2040/41	81,793	74,013	155,806
Total	$1,249,590	$1,110,993	$2,360,583

(19) Lessee in Operating Lease Agreements

OCFA is obligated under operating lease agreements for the rental of various fire stations, including a land lease at Fullerton Municipal Airport:

- Twenty-six city-owned stations are leased for $1 per year through June 30, 2030. In addition, OCFA leases land from three cities for three OCFA-owned stations. The station land leases are for $1 per year and extend through June 30, 2030 (Station 6); November 26, 2057 (Station 17); and April 30, 2045 (Station 36).

- On June 14, 2010**,** OCFA entered into a land lease agreement with the City of Fullerton for a new space at Fullerton Municipal Airport. Monthly lease payments of $2,886 for the eastern half of the building commenced January 2011. An additional monthly lease payment of $2,070 for the western half of the building commenced July 2013. Total monthly rent will increase annually by an amount equal to the change in the consumer price index, from a minimum of 3% to a maximum of 5%. The term of the agreement extends forty years through July 2050, with a fifteen year extension option through July 2065.

- On August 25, 2011, the OCFA Executive Committee approved the execution of a Lease Agreement with FW Aviation, LLC for a training tower at Fire Station No. 41 Air Operations and Maintenance Facility at Fullerton Airport, which includes a helicopter training prop, an additional restroom, and approximately 600 square feet of classroom/storage area. The lease term is for ten years commencing September 2011, with an optional ten-year extension. Initial monthly rent of $1,575 will increase by $18 each year.

Future minimum lease payments for the OCFA's operating lease obligations are as follows:

Fiscal Year(s)	City-Owned Stations/ Land Leases	Airport Land Lease	Airport Training Tower	Total
2016/17	$ 29	$ 71,016	$ 19,944	$ 90,989
2017/18	29	73,140	20,160	93,329
2018/19	29	75,324	20,376	95,729
2019/20	29	77,592	20,592	98,213
2020/21	29	79,920	20,808	100,757
2021/22 - 2025/26	145	436,992	3,474	440,611
2026/27 - 2030/31	118	506,652	-	506,770
2031/32 - 2035/36	10	587,376	-	587,386
2036/37 - 2040/41	10	680,928	-	680,938
2041/42 - 2045/46	9	789,348	-	789,357
2046/47 - 2050/51	5	818,100	-	818,105
2051/52 - 2055/56	5	-	-	5
2056/57 - 2060/61	1	-	-	1
Total	$448	$4,196,388	$105,354	$4,302,190

(20) Insurance

(a) Coverage Limits

OCFA has purchased commercial insurance coverage for general, auto, property, volunteer accident, aviation, and pollution liabilities; public official and auto verifier bonds; and excess coverage for the self-insured workers compensation. Coverage limits include the following:

Type of Coverage	Limit	Deductible
General and Auto Liability:		
Each Occurrence or Wrongful Act	$1,000,000	
General Annual Aggregate	$2,000,000	
Management Liability	$1,000,000	$5,000
Cyber Liability	$1,000,000	
Auto Liability	$1,000,000 combined single limit	$1,000 - $3,000
Garage Keepers Legal Liability	$250,000	$250 - $500
Umbrella Liability	$10,000,000	

Type of Coverage	Limit	Deductible
Property Liability:		
Buildings and Contents	Scheduled replacement cost	$5,000
Crime/Employee Dishonesty	$1,000,000	$5,000
Volunteer Accident:		
Accidental Death and Dismemberment	$25,000 each occurrence; $250,000 aggregate per accident	
Accident Medical Expense	$100,000 per occurrence	
Dental	$250 per tooth	
Aircraft Hull and Liability	$50,000,000 per occurrence	$15,000 - $50,000
Pollution Liability	$1,000,000 per condition	$25,000
Public Official Bonds	$1,000,000 each	
Auto Verifier Bonds	$5,000 each	
Excess Workers Compensation	Statutory limits	

At June 30, 2016, OCFA had no outstanding claims which exceed insurance coverage. There have been no significant changes in insurance coverage as compared to last year, and settlements have not exceeded coverage in each of the past three fiscal years.

(b) Self-Insurance

OCFA transitioned its program for workers' compensation insurance from Guaranteed Cost to Self-Insurance effective March 1, 2002. OCFA's self-insurance program covers workers' compensation claims up to $50,000,000, subject to a $2,000,000 self-insured retention (SIR) per incident. Workers' compensation claims in excess of the self-insured level are insured by the California State Association of Counties Excess Insurance Authority (CSAC-EIA) at statutory limits. OCFA utilizes the services of a third-party claims administrator for administration of workers' compensation claims.

As of June 30, 2016, accrued claims and judgments for workers' compensation totaled $61,196,645 and were recorded as a long-term liability in the government-wide financial statements. This liability reflects the present value of estimated outstanding losses at the 50% confidence level, as determined by an actuarial valuation dated December 31, 2015, and includes claims that have been incurred but not yet reported (IBNR's). A confidence level is the statistical certainty that an actuary believes funding will be sufficient. For example, a 50% confidence level means that the actuary believes funding will be sufficient in five years out of ten. On May 27, 2010, the Board of Directors authorized to change the OCFA's confidence level from 80% to 50%.

Following is a summary of changes in workers' compensation claims payable for the years ended June 30, 2016 and 2015, including the current and long-term portions at year-end.

	Fiscal Year Ended	
	June 30, 2016	June 30, 2015
Unpaid claims at beginning of fiscal year	$62,372,690	$56,789,859
Incurred claims (including IBNR's)	6,716,066	12,026,082
Claim payments	(7,892,111)	(6,443,251)
Unpaid claims at end of fiscal year	$61,196,645	$62,372,690
Current portion	$ 7,743,304	$ 7,076,667
Long-term portion	53,453,341	55,296,023
Unpaid claims at end of fiscal year	$61,196,645	$62,372,690
Confidence level at end of fiscal year	50%	50%

Because of the long-term nature of this liability, it is excluded from the OCFA's governmental fund financial statements under the modified accrual basis of accounting. However, OCFA has established a fund balance assignment for workers' compensation in the General Fund in the amount of $73,720,054. This assignment reflects the cumulative difference for multiple years between actual expenditures and budgeted costs, which are based on the annual actuarial valuation. Actual expenditures for workers' compensation cases often occur over multiple years, attributing to the cumulative difference between budgeted costs and expenditures.

(21) Retirement Plan for Full-Time Employees

(a) General Information about the Plan

Plan Description and Administration

OCFA participates in the Orange County Employees Retirement System (OCERS), a cost-sharing multiple-employer, defined benefit pension plan for the County of Orange, the City of San Juan Capistrano, and thirteen other agencies – Orange County Cemetery District; Orange County Children and Families Commission; Orange County Department of Education; Orange County Employees Retirement System; Orange County Fire Authority (OCFA); Orange County In-Home Supportive Services Public Authority; Orange County Local Agency Formation Commission; Orange County Public Law Library; Orange County Sanitation District; Superior Court of California; Orange County Transportation Authority; Transportation Corridor Agencies; and the University of California, Irvine Medical Center and Campus. The Orange County Department of Education and the University of California, Irvine Medical Center and Campus are closed to new member participation and only the latter has remaining active employees. Capistrano Beach, Cypress Recreation & Parks District, Orange County Vector Control District, and the City of Rancho Santa Margarita are no longer active plan sponsors, but retired members and their beneficiaries, as well as deferred members, remain in the OCERS system. OCERS is legally and fiscally independent of the County of Orange.

OCERS was established in 1945 under the provisions of the County Employees Retirement Law of 1937. OCERS is governed by a ten-member Board of Retirement, including nine voting members and one alternate member. Board membership consists of four members appointed by the County of Orange Board of Supervisors and five members elected by the members of the pension system – two

by the general members, two by the safety members (one voting and one alternate), and one by the retired members. The County of Orange Treasurer-Tax Collector, who is elected by the voters registered in the county, serves as an ex-officio member.

OCERS issues a publicly available financial report that includes financial statements and required supplementary information for the cost-sharing plans that are administered by OCERS. The report can be obtained from OCERS at 2223 Wellington Avenue, Santa Ana, California 92701.

Benefits Provided

OCERS provides retirement, disability, and death benefits to general and safety members. Safety membership includes those members serving in active law enforcement, fire suppression, and as probation officers. General membership applies to all other occupations. Plan retirement benefits are tiered based upon date of OCERS membership. Tier I members were hired prior to September 21, 1979, and use their highest one-year average salary to determine their retirement allowance. Tier II members were hired after September 21, 1979, and use their highest three-year average salary to determine their retirement allowance. Member rate groups are determined by employer, bargaining unit, and benefit plan. The benefit plan represents the benefit formula and tier that will be used in calculating a retirement benefit. All regular employees scheduled to work twenty hours or more per week become members of the plan upon commencing employment with one of OCERS' plan sponsors, with the exception of a provision adopted in 2014 that allows new members over the age of 65 to opt out of the plan. Active members are vested in OCERS upon accumulating five years of accredited service or attaining the age of 70.

On September 12, 2012, California Governor Brown signed Assembly Bill 340, which created the California Public Employees' Pension Reform Act of 2012 (PEPRA) and amended sections of the 1937 Act under which OCERS operates. The law created a benefit tier for new employees entering public agency employment and public retirement system membership, effective January 1, 2013. One of the many changes brought about by PEPRA involved new retirement formulas for newly hired employees who do not establish reciprocity with OCERS. Another change brought about by PEPRA requires employees who do not establish reciprocity to pay 50% of the normal retirement costs from the beginning of their employment.

In general, the retirement benefits received by members are determined by plan formula, age at retirement, years of service, and final average salary. Members are entitled to receive a retirement allowance upon reaching the following years of service and age criteria:

Years of Service Credit	Eligible Age
10 or more	Age 50
5 or more (PEPRA Members)	Age 52
30 or more (General Members)	Any age
20 or more (Safety Members)	Any age
5 or more, and at least 10 years of active employment with a sponsoring agency covered by OCERS (Part-time Members)	Age 55
Any	Age 70

The provisions and benefits provided by OCFA to its safety and general members as of June 30, 2016 are summarized below:

Benefits Provided to Safety Members					
			Representation / Bargaining Unit / Employee Hire Date		
			Orange County Professional Firefighters Association	Orange County Fire Authority Chief Officers Association	Unrepresented
Plan	Tier	Benefit Formula	Firefighter Unit	Fire Management Unit	Executive Management in Safety Positions
E	I	3.0% at 50	Prior to 7/1/2012	Prior to 7/1/2012	Prior to 7/1/2011
F	II	3.0% at 50	Prior to 7/1/2012	Prior to 7/1/2012	Prior to 7/1/2011
R	II	3.0% at 55	On or After 7/1/2012 (with reciprocity)	On or After 7/1/2012 (with reciprocity)	On or After 7/1/2011 (with reciprocity)
V	II	2.7% at 57 (PEPRA)	On or After 1/1/2013 (without reciprocity)	On or After 1/1/2013 (without reciprocity)	On or After 1/1/2013 (without reciprocity)

Benefits Provided to General Members					
			Representation / Bargaining Unit / Employee Hire Date		
			Orange County Employees Association	Orange County Fire Authority Management Association	Unrepresented
Plan	Tier	Benefit Formula	General and Supervisory Management	Administrative Management	Executive Management in General Positions
I	I	2.7% at 55	Prior to 7/1/2011	Prior to 12/1/2012	Prior to 12/1/2012
J	II	2.7% at 55	Prior to 7/1/2011	Prior to 12/1/2012	Prior to 12/1/2012
N	II	2.0% at 55	On or After 7/1/2011 (with reciprocity)	On or After 12/1/2012 (with reciprocity)	On or After 12/1/2012 (with reciprocity)
U	II	2.5% at 67 (PEPRA)	On or After 1/1/2013 (without reciprocity)	On or After 1/1/2013 (without reciprocity)	On or After 1/1/2013 (without reciprocity)

Contributions

Each year, an actuarial valuation is performed for OCERS to determine funding contributions for each agency member within their assigned rate group and plan on an actuarial basis. The actuarially determined rate is the estimated amount necessary to finance the cost of benefits earned by employees during the year, with an additional amount to finance any unfunded actuarial accrued liability (UAAL). The table below summarizes OCFA's required employer contribution rates and employee rates (paid by OCFA) for the year ended June 30, 2016:

				Employer Contribution Rates			Employee Contribution Rates (See Below)
Category	Plan	Tier	Benefit Formula	Normal Cost	UAAL	Total	
Safety	E	I	3.0% at 50	25.86%	24.14%	50.00%	9.70% - 13.74%
Safety	F	II	3.0% at 50	25.86%	24.14%	50.00%	13.32% - 19.75%
Safety	R	II	3.0% at 55	21.70%	24.14%	45.84%	12.72% - 18.86%
Safety	V	II	2.7% at 57 (PEPRA)	16.85%	24.14%	40.99%	13.22% - 21.71%
General	I	I	2.7% at 55	14.06%	23.34%	37.40%	10.46% - 16.32%
General	J	II	2.7% at 55	14.06%	23.34%	37.40%	9.99% - 16.32%
General	N	II	2.0% at 55	14.15%	23.34%	37.49%	7.59% - 13.32%
General	U	II	2.5% at 67 (PEPRA)	9.71%	23.34%	33.05%	7.73% - 13.10%

Employees in each unit have agreed through their respective Memorandums of Understanding or Personnel and Salary Resolution to pay their full employee share of retirement costs, with those employee payments being phased in over three to four years. The retirement payment is deducted from the employee's compensation earnable and continues throughout the employee's entire term of employment with OCFA.

Employee contribution rates vary depending on the individual employee's hire date and unit, and are summarized below for the year ended June 30, 2016.

Employee Hire Date	Benefit Formula	Employee Contribution Rate
Safety – Firefighter Unit		
Prior to 1/1/2011	3.0% at 50	11.0% as of 11/14/2014*
1/1/2011 - 6/30/2012	3.0% at 50	11.0% as of 11/14/2014
On or After 7/1/2012 (with reciprocity)	3.0% at 55	
On or After 1/1/2013 (without reciprocity)	2.7% at 57 (PEPRA)	50% of Normal Cost
Safety – Firefighter Management Unit		
Prior to 1/1/2011	3.0% at 50	9.0% as of 2/7/2014**
1/1/2011 - 6/30/2012	3.0% at 50	9.0% as of 1/1/2011
On or After 7/1/2012 (with reciprocity)	3.0% at 55	9.0% as of 7/1/2012
On or After 1/1/2013 (without reciprocity)	2.7% at 57 (PEPRA)	50% of Normal Cost
Safety – Executive Management		
Prior to 7/1/2011	3.0% at 50	11.0% as of 3/6/2015**
On or After 7/1/2011 (with reciprocity)	3.0% at 55	13.5% as of 3/4/2016**
On or After 1/1/2013 (without reciprocity)	2.7% at 57 (PEPRA)	50% of Normal Cost
General – General and Supervisory Management		
Prior to 7/1/2011	2.7% at 55	9.0% as of 7/1/2014
On or After 7/1/2011 (with reciprocity)	2.0% at 55	11.0% as of 3/7/2015** 13.5% as of 3/6/2016**
On or After 1/1/2013 (without reciprocity)	2.5% at 67 (PEPRA)	50% of Normal Cost
General – Administrative Management		
Prior to 12/1/2012	2.7% at 55	9.0% as of 2/6/2015 12.25% as of 7/10/2015** 14.25% as of 1/8/2016**
On or After 12/1/2012 (with reciprocity)	2.0% at 55	9.0% as of 12/1/2012 12.25% as of 7/10/2015** 14.25% as of 1/8/2016**
On or After 1/1/2013 (without reciprocity)	2.5% at 67 (PEPRA)	50% of Normal Cost
General – Executive Management		
Prior to 12/1/2012	2.7% at 55	11.0% as of 3/6/2015**
On or After 12/1/2012 (with reciprocity)	2.0% at 55	13.5% as of 3/4/2016**
On or After 1/1//2013 (without reciprocity)	2.5% at 67 (PEPRA)	50% of Normal Cost

* *Consists of a 9.0% employee payroll deduction and a 2.0% Healthcare Converted Retirement Contribution credit for savings obtained as a result of modifications to the OCPFA Health Plan Agreement.*

*** Capped at maximum employee contribution*

For the year ended June 30, 2016, employer and employee contributions remitted to OCERS were as follows:

	Employer Contributions	Employee Contributions	Total Contributions
Contributions paid by OCFA	$78,708,605	$ 4,018,311	$82,726,916
Contributions paid by employees	-	12,867,971	12,867,971
Contributions remitted to OCERS	$78,708,605	$16,886,282	$95,594,887

(b) Pension Liabilities, Pension Expenses, and Deferred Outflows/Inflows of Resources Related to Pensions

OCFA's net pension liability with OCERS is measured as the proportionate share of the net pension liability. The net pension liability of each member agency is measured as of December 31, 2015, and the total pension liability for each member agency used to calculate the net pension liability was determined by an actuarial valuation as of December 31, 2014, rolled forward to December 31, 2015, using standard update procedures. OCFA's proportion of the net pension liability was based on a projection of OCFA's long-term share of contributions to the pension plan relative to the projected contributions of all participating agencies, actuarially determined. OCFA's proportionate share of the total OCERS net pension liability as of June 30, 2015 and 2016 was as follows:

	OCFA's Proportionate Share of the Total OCERS Net Pension Liability					
	At June 30, 2015		Increase (Decrease)		At June 30, 2016	
Member Type	Amount	%	Amount	%	Amount	%
Safety	$404,329,372	8.0%	$45,142,651	(0.1%)	$449,472,023	7.9%
General	62,638,951	1.2%	5,558,832	0.0%	68,197,783	1.2%
Total	$466,968,323	9.2%	$50,701,483	(0.1%)	$517,669,806	9.1%

For the year ended June 30 2016, OCFA recognized pension expense of $94,784,899. At June 30, 2016, OCFA reported deferred outflows of resources and deferred inflows of resources related to pensions from the following sources:

	Deferred Outflows of Resources	Deferred Inflows of Resources
Differences between actual and expected experience in the Total Pension Liability	$ -	$ (32,777,639)
Changes in assumptions	24,322,360	(3,041,794)
Net differences between projected and actual earnings on plan investments	83,874,144	-
	108,196,504	(35,819,433)
Employer contributions subsequent to measurement date	30,809,000	-
Total	$139,005,504	$(35,819,433)

Deferred outflows of resources related to contributions subsequent to the measurement date totaling $30,809,000 will be recognized as a reduction of the net pension liability in the year ended June 30, 2017. Other amounts reported as deferred outflows of resources and deferred inflows of resources related to pensions will also be recognized as an adjustment to pension expense as follows:

Year Ended June 30	Amount
2017	$20,387,946
2018	20,387,946
2019	20,387,943
2020	14,824,361
2021	(3,389,107)
2022	(222,018)
Total	$72,377,071

(c) Actuarial Assumptions

The total pension liability in the December 31, 2014, actuarial valuation was determined using the following actuarial assumptions:

	Safety	**General**
Valuation Date	December 31, 2014	
Measurement Date	December 31, 2015, rolled forward on an actuarial basis	
Actuarial Cost Method	Entry age normal	
Actuarial Assumptions:		
• Discount rate	7.25%	
• Inflation	3.00%	
• Investment rate of return	7.25%, net of pension plan investment expense, including inflation	
• Salary increases	“Across the board” real salary increases of 0.50% per year	

	Safety	General
• Mortality:		
o Healthy	RP-2000 Combined Healthy Mortality Table projected with Scale BB to 2020 with ages set back two years.	RP-2000 Combined Healthy Mortality Table projected with Scale BB to 2020.
o Disabled	RP-2000 Combined Healthy Mortality Table projected with Scale BB to 2020.	RP-2000 Combined Healthy Mortality Table projected with Scale BB to 2020 with ages set forward six years for males and set forward three years for females.
o Beneficiaries	Beneficiaries are assumed to have the same mortality as a General Member of the opposite sex who is receiving a service (non-disability) retirement.	
o Employee Contribution Rates	RP-2000 Combined Healthy Mortality Table projected with Scale BB to 2020 with ages set back two years weighted 80% male and 20% female.	RP-2000 Combined Healthy Mortality Table projected with Scale BB to 2020 weighted 40% male and 60% female.

The mortality tables shown above were determined to contain sufficient provision appropriate to reasonably reflect future mortality improvement, based on a review of the mortality experience by OCERS, as of December 31, 2015.

Discount Rate

The discount rate used to measure the Total Pension Liability was 7.25% as of December 31, 2015, and December 31, 2014. The projection of cash flows used to determine the discount rate assumed plan member contributions will be made at the current contribution rate and that employer contributions will be made at rates equal to the actuarially determined contribution rates. For this purpose, only employer contributions that are intended to fund benefits for current plan members and their beneficiaries are included. Projected employer contributions that are intended to fund the service costs for future plan members and their beneficiaries, as well as projected contributions from future plan members, are not included. Based on those assumptions, the pension plan's fiduciary net position was projected to be available to make all projected future benefit payments for current plan members. Therefore, the long-term expected rate of return on pension plan investments was applied to all periods of projected benefit payments to determine the total pension liability as of both December 31, 2015, and December 31, 2014.

The long-term expected rate of return on pension plan investments was determined using a building-block method in which expected future real rates of return (expected returns, net of inflation) are developed for each major asset class. These returns are combined to produce the long-term expected rate of return by weighting the expected future real rates of return by the target asset allocation percentage, adding expected inflation, and subtracting expected investment expenses and a risk margin. The target allocation (approved by the OCERS Retirement Board) and projected arithmetic real rates of return for each major asset class, after deducting inflation but before deducting

investment expenses, used in the derivation of the long-term expected investment rate of return assumption are summarized in the following table:

Asset Class	Target Allocation	Long-term Expected Real Rate of Return
Large Cap U.S. Equity	14.90%	5.92%
Small/Mid Cap U.S. Equity	2.73%	6.49%
Developed International Equity	10.88%	6.90%
Emerging International Equity	6.49%	8.34%
Core Bonds	10.00%	0.73%
Global Bonds	2.00%	0.30%
Emerging Market Debt	3.00%	4.00%
Real Estate	10.00%	4.96%
Diversified Credit (U.S. Credit)	8.00%	4.97%
Diversified Credit (Non-U.S. Credit)	2.00%	6.76%
Hedge Funds	7.00%	4.13%
GTAA	7.00%	4.22%
Real Return	10.00%	5.86%
Private Equity	6.00%	9.60%
Total	100.00%	

Sensitivity of the Net Pension Liability to Changes in the Discount Rate

The following presents OCFA's proportionate share of the net pension liability with OCERS, calculated using the discount rate of 7.25%, as well as what OCFA's proportionate share of the net pension liability would be if it were calculated using a discount rate that is one percentage point lower (6.25%) or one percentage point higher (8.25%) than the current rate.

	1% Decrease (6.25%)	Current Discount Rate (7.25%)	1% Increase (8.25%)
Total proportionate share of net pension liability	$749,396,258	$517,669,806	$326,999,958

Pension Plan Fiduciary Net Position

Detailed information about the pension plan's fiduciary net position is available in the separately issued OCERS financial report.

(22) Retirement Plan for Part-Time Employees

(a) General Information about the Plan

Plan Description and Administration

OCFA administers the Extra Help Retirement Plan (Plan), a single-employer defined benefit pension plan that provides retirement benefits for its less than half-time and extra help employees. The Plan

was established on January 1, 1997, and is accounted for in the Extra Help Retirement Plan fiduciary fund. The Board establishes and amends all Plan provisions, and has the authority to change contribution rates and investment types. A separate, audited pension plan report is not available.

Benefits Provided

The Plan provides retirement benefits in the form of a lifetime annuity. Retirement benefits for Plan members are calculated at the rate of 2% of career earnings during the first thirty years of credited service. Upon retirement, participants are eligible to receive their benefit either as a lump sum payment or as a monthly payment. If employment with OCFA is terminated prior to retirement and the value of the employee's contributions with interest is $3,500 or less, the employee may receive an immediate lump sum distribution in lieu of any future benefits payable under the Plan. If the value of the terminated employee's contributions with interest exceeds $3,500, the employee may elect to receive a lump sum distribution or leave the contributions on deposit until he or she reaches retirement age.

During the year ended June 30, 2016, lump sum distributions totaling $10,642 were made to thirty-three participants. Currently, there are no participants collecting retirement benefits.

Plan Membership

As of June 30, 2016, Plan membership consisted of the following:

	Balance as of June 30, 2016		
Plan Members (or Beneficiaries)	$3,500 or Less	More than $3,500	Total
Inactive; currently receiving benefits	-	-	-
Inactive; entitled to but not yet receiving benefits	43	4	47
Active	17	-	17
Total plan members	60	4	64

Contributions

All eligible half-time and extra help employees hired on or after January 1, 1997, are required to contribute a percentage of compensation corresponding to an age-based table included in the Plan. Age is determined as attained age on every January 1. Employee contributions rates range from 2.5% to 7.5% based on age. After 30 years of credited service, OCFA is responsible for the employee's Plan contributions.

Employee contributions are credited with 5% interest compounded semi-annually. Any interest earnings credited to the Plan in excess of actual investment earnings are reported as employer contributions.

During the year ended June 30, 2016, employee and employer contributions totaled $8,923 and $2,267, respectively.

(b) Investments

Method Used to Value Investments

Investments are reported at fair value.

Investment Policy

Contributions are deposited into the OCFA's Local Agency Investment Fund (LAIF), which is regulated by California Government Code Section 16429 under the oversight of the Treasurer of the State of California. LAIF is functionally equivalent to a non-SEC regulated government mutual fund invested in fixed income debt securities. LAIF is overseen by the Local Agency Investment Advisory Board which consists of five members, in accordance with State statute.

Concentrations

All Plan assets are invested in the Local Agency Investment Fund, which is reported at fair value of the pool shares.

(c) Net Pension Liability

Net pension liability is measured as the total pension liability, less the pension plan's fiduciary net position. The Plan's net pension liability is measured as of June 30, 2016, using an actuarial valuation as of January 1, 2016, rolled forward to June 30, 2016 using standard update procedures. A summary of components of the Plan's net pension liability as of June 30, 2016, is shown below, followed by principal assumptions and methods used to determine the net pension liability.

Total pension liability	$238,489
Plan fiduciary net position	(74,798)
Net pension liability	$163,691
Plan fiduciary net position as a % of total pension liability	31.4%

Actuarial Assumptions

Actuarial calculations reflect a long-term perspective. Calculations are based on the benefits provided under the terms of the Plan in effect at the time of each valuation and on the pattern of sharing of costs between the OCFA and plan members to that point. Actuarial valuations of an ongoing plan involve estimates of the value of reported amounts and assumptions about the probability of occurrence of events far into the future. Actuarially determined amounts are subject to continual revision as results are compared to past expectations and new estimates are made about the future.

The total pension liability in the January 1, 2016, actuarial valuation was determined using the following actuarial assumptions:

Valuation Date	January 1, 2016
Measurement Date	June 30, 2016, rolled forward on an actuarial basis
Actuarial Cost Method	Entry age normal
Actuarial Assumptions: • Discount rate • Inflation • Salary increases • Investment rate of return • Mortality	 2.90%, net of pension investment expense, including inflation 2.75% 3.00%, including merit, seniority, and inflation Annual salary for the current year is assumed to be equal to the average annual salary over the last 3 years. 2.90% RP-2000 mortality table for combined healthy participants to 2016 for mortality according to Scale BB
Experience study	Given the size of the plan, there was not enough data available to conduct a credible experience study. The assumptions are not anticipated to produce significant cumulative actuarial gains or losses over time. The liabilities and data are analyzed each year in order to identify any trends of experience deviating from the actuarial assumptions.
Form of payment	Participants who have 5 years or less of credited service or have a contribution balance less than or equal to $3,500 are assumed to take an immediate lump sum upon termination or retirement. Participants who have worked more than 5 years or have attained age 55 are assumed to commence a modified cash refund annuity starting at age 65.
Retirement	100% retirement at age 65
Termination	Service Rate 0 years 30% 1-3 years 50% 4 years 25% 5+ years 5%
Plan Assets	The employee contributions are deposited into the Authority's LAIF account. The LAIF account is managed by the State Treasurer's Office and is invested in fixed income securities. Quoted market value was used as the fair value of assets.

Discount Rate

The discount rate used to measure the total pension liability was 2.90%. The projection of cash flows used to determine the discount rate assumed that plan member contributions will be made at the current contribution rate and that contributions will be made at rates equal to the difference between actuarially determined contribution rates and the member rate. Based on those assumptions, the Plan's fiduciary net position was projected to be available to make all projected future benefit payments of current plan members. Therefore, the long-term expected rate of return on pension plan investments was applied to all periods of projected benefit payments to determine the total pension liability.

(d) Changes in the Net Pension Liability

Changes in the Plan's net pension liability for the year were as follows:

	Total Pension Liability	Plan Fiduciary Net Position	Net Pension Liability/ (Asset)
Balance at June 30, 2015	$313,389	$73,031	$240,358
Changes in the year:			
Service cost	8,331	-	8,331
Interest	11,865	-	11,865
Difference between actual and expected experience	(131,777)	-	(131,777)
Changes of assumptions	47,323	-	47,323
Contributions – employer	-	2,267	(2,267)
Contributions – plan members	-	8,923	(8,923)
Net investment income	-	1,219	(1,219)
Benefit payments, including refunds of employee contributions	(10,642)	(10,642)	-
Net changes	(74,900)	1,767	(76,667)
Balance at June 30, 2016	$238,489	$74,798	$163,691

Sensitivity of the Net Pension Liability to Changes in the Discount Rate

The following presents the net pension liability, calculated using the discount rate of 2.90%, as well as what the net pension liability would be if it were calculated using a discount rate that is one percentage point lower (1.90%) or one percentage point higher (3.90%) than the current rate:

	1% Decrease (1.90%)	Current Discount Rate (2.90%)	1% Increase (3.90%)
Net pension liability	$233,522	$163,691	$112,652

Pension Plan Fiduciary Net Position

As previously mentioned, the Plan does not issue a separate stand-alone financial report. More detailed information on the Plan's fiduciary net position is presented on pages 43 and 44 of this report.

(e) Pension Expense and Deferred Outflows/Inflows of Resources Related to Pensions

For the year ended June 30 2016, OCFA recognized pension expense of $(15,017). At June 30, 2016, OCFA reported deferred outflows of resources and deferred inflows of resources related to pensions from the following sources:

	Deferred Outflows of Resources	Deferred Inflows of Resources
Differences between actual and expected experience in the Total Pension Liability	$ -	$(92,134)
Changes in assumptions	31,549	-
Net differences between projected and actual earnings on plan investments	1,224	-
	32,773	(92,134)
Employer contributions subsequent to measurement date	2,267	-
Total	$35,040	$(92,134)

Deferred outflows of resources related to contributions subsequent to the measurement date totaling $2,267 will be recognized as a reduction of the net pension liability in the year ended June 30, 2017. All other amounts reported as deferred outflows of resources and deferred inflows of resources related to pensions will also be recognized as an adjustment to pension expense as follows:

Year Ended June 30	Deferred Outflows of Resources	Deferred Inflows of Resources	Net Amount
2017	$16,080	$(48,209)	$(32,129)
2018	16,081	(43,925)	(27,844)
2019	306	-	306
2020	306	-	306
Total	$32,773	$(92,134)	$(59,361)

(23) Defined Benefit Retiree Medical Plan – Other Post-Employment Benefits (OPEB)

(a) Plan Description

OCFA provides a post-employment Retiree Medical Plan (Plan), a single-employer defined benefit plan, for its full-time employees hired prior to January 1, 2007. The Plan, which was established on January 1, 1997, and amended on September 28, 2006, provides a monthly grant toward the cost of retirees' health insurance coverage. The Board establishes and amends all Plan provisions through negotiations with labor bargaining units.

The Plan's assets are held in an irrevocable trust for the exclusive benefit of Plan participants and are administered by the Orange County Employees Retirement System (OCERS). Funds are held in a trust account established pursuant to Section 401(h) of the Internal Revenue Code and are held separate from the assets of the OCERS retirement system, except for investment purposes. A publicly available financial report can be obtained from OCERS at 2223 Wellington Avenue, Santa Ana, California 92701.

Prior to the amendment on September 28, 2006, all Plan activity was accounted for in OCFA's Retiree Medical Fund. Thereafter, plan assets were remitted to OCERS and are no longer reported in the OCFA's financial statements.

All retirees and full-time employees hired prior to January 1, 2007, are eligible to participate in the Plan. Following is a schedule of active Plan participants (excluding any terminated/declined participants) as of June 30 for the current and previous two fiscal years.

As of June 30	Active Employees	Current Retirees and Surviving Spouses	Current Deferred Retirees	Active Plan Participants
2014	697	574	3	1,274
2015	642	624	3	1,269
2016	602	654	3	1,259

(b) Funding Policy

Current, active employees are required to contribute 4% of their pay through payroll deductions to the OCFA. (Prior to September 28, 2006, the required contribution rate was 1% of pay.) OCFA may also periodically remit Plan contributions to the trust administered by OCERS in amounts authorized to be contributed by the Board of Directors.

(c) Benefits

Participating employees who are credited with at least one year of service are eligible to receive Plan benefits upon retirement. A participating employee who terminates employment with the OCFA for reasons other than retirement is eligible to begin receiving Plan benefits at age 55. Participants must be covered under a qualified health plan, Medicare, or a recognized health insurance plan.

The amount of the monthly grant is based on years of credited service and is applied as a credit towards the cost of the retiree's monthly medical insurance premium. For the year ended June 30, 2016, there were 654 eligible retirees and surviving spouses who received monthly benefits aggregating to an annual total of $4,307,015. In addition, there were four deferred retirees who received benefits directly from the OCFA during Fiscal Year 2015/16 totaling $6,790.

(d) Annual OPEB Cost and Net OPEB Obligation/Asset

OCFA's Annual OPEB Cost is equal to the annual required contribution to the Plan, plus an adjustment for the cumulative difference between the Annual OPEB Cost and the OCFA's actual contributions for the year. The cumulative difference is called the Net OPEB Obligation (NOPEBO) (or a Net OPEB Asset if annual required contributions are over-funded). For the year ended June 30, 2016, OCFA's annual OPEB cost was $13,550,385, as determined by an actuarial valuation with a measurement date as of July 1, 2014, and was calculated as follows:

Annual Required Contribution (ARC)	$15,161,649
Interest on the Net OPEB Obligation (NOPEBO)	2,877,656
Actuary's adjustment on the ARC	(4,488,920)
Annual OPEB Cost	$13,550,385

During the year ended June 30, 2016, actual contributions totaled $4,460,115 resulting in an increase to the NOPEBO of $9,090,270 (the difference between the Annual OPEB Cost and actual contributions). The outstanding balance of the NOPEBO as of June 30, 2016, was $66,643,396. Following is a schedule of employer contributions, as well as a calculation of OCFA's Net OPEB Asset (Obligation) for the current and previous two fiscal years.

FYE June 30	Annual OPEB Cost	Actual Contributions	% of Annual OPEB Cost Contributed	Net Increase to Net OPEB Obligation	Cumulative Net OPEB Obligation at June 30
2014	$14,461,381	$4,693,202	32.45%	$9,768,179	$48,085,317
2015	13,704,972	4,237,163	30.92%	9,467,809	57,553,126
2016	13,550,385	4,460,115	32.92%	9,090,270	66,643,396

The Annual OPEB Cost includes an implicit subsidy for safety members under the age of 65. Accordingly, the Actual Contributions also include implicit insurance for the current and previous two fiscal years:

	2016	2015	2014
Amounts irrevocably transferred to OCERS trust:			
Active employees	$2,454,900	$2,601,233	$2,758,828
Retirees and other plan members	939,826	714,338	723,690
Subtotal	3,394,726	3,315,571	3,482,518
Implicit insurance premiums paid on behalf of retirees	1,058,599	916,573	1,205,520
Amounts paid directly to retirees	6,790	5,019	5,164
Total actual contributions	$4,460,115	$4,237,163	$4,693,202

(e) Funded Status and Funding Progress

The following schedule of funding progress shows whether the actuarial value of Plan assets is increasing or decreasing over time relative to the actuarial accrued liabilities for benefits. A required schedule of funding progress immediately following the notes to the financial statements presents multi-year trend information about whether the actuarial value of plan assets is increasing or decreasing relative to the actuarial accrued liability for benefits over time.

As of July 1	(a) Actuarial Value of Assets	(b) Entry Age Actuarial Accrued Liability (AAL)	(b-a) Unfunded AAL (UAAL)	(a/b) Funded Ratio	(c) Covered Payroll	(b-a)/c UAAL as a % of Covered Payroll
2010	$21,549,574	$147,709,326	$126,159,752	14.59%	$81,391,495	155.00%
2012	28,910,090	156,623,184	127,713,094	18.46%	75,432,000	169.31%
2014	36,945,371	179,056,290	142,110,919	20.63%	66,021,000	215.25%

(f) Actuarial Methods and Assumptions

Actuarial calculations reflect a long-term perspective. Calculations are based on the benefits provided under the terms of the Plan in effect at the time of each valuation and on the pattern of

sharing of costs between the OCFA and plan members to that point. Actuarial valuations of an ongoing plan involve estimates of the value of reported amounts and assumptions about the probability of occurrence of events far into the future. The funded status of the Plan and the annual required contributions are subject to revision as actual results are compared with past expectations and new estimates are made about the future. The annual required contribution for the year ended June 30, 2016, was determined by an actuarial valuation of the Plan dated July 1, 2014. Unfunded liabilities are amortized over a closed period ending June 30, 2036. The principle assumptions and methods used to determine the annual required contribution were as follows:

Valuation date	July 1, 2014
Actuarial cost method	Entry age normal
Amortization method	30 years beginning July 1, 2006, closed, level dollar
Remaining amortization period	22 years as of July 1, 2014
Asset valuation method	Market value
Actuarial assumptions:	
• Asset rate of return	7.25%
• Discount rate	5.0%, blended using a short-term rate of 4.25% for portion of expected benefits not expected to be paid from contributions and return on assets
• Projected salary increases	N/A
• Wage inflation	3.25%
• Medical trend rates	5.00% - 7.75%
• Increase in retiree medical grant	5.0%
Plan membership:	
• Current retirees and surviving spouses	573
• Current active members	697
• Terminated participants entitled but not yet eligible	13
• Declined	14

(24) Retiree Defined Contribution Healthcare Expense Reimbursement Plan

On September 28, 2006, OCFA created the Orange County Fire Authority Retiree Defined Contribution Healthcare Expense Reimbursement Plan (Plan), an employer-sponsored defined contribution benefit plan. The Plan, which became effective January 1, 2007, provides for the reimbursement of medical, dental, and other healthcare expenses of retirees. The Board establishes and amends all Plan provisions in conjunction with its negotiated labor contracts and is subject to all applicable requirements of the Myers-Milias-Brown Act and any other applicable law. Plan assets are held in trust and administered by Select Account.

All active, full-time employees who became employed by the OCFA on or after January 1, 2007, are required to contribute 4% of their gross pay through payroll deductions to the OCFA. All contributions, investment income, realized and unrealized gains and losses are credited to individual recordkeeping accounts maintained in the name of each Plan participant. Account assets are invested as directed by the participant from among investment funds selected by the OCFA. Participants are eligible to receive Plan

benefits upon reaching retirement age, including those who terminate employment with the OCFA for reasons other than retirement. Required and actual employee contributions totaled $1,957,913 for the year ended June 30, 2016.

(25) Short-term Debt

On July 1, 2015, OCFA issued $36,260,000 of 2015-2016 Tax and Revenue Anticipation Notes (TRAN) at an interest rate of 2.00%, for the purpose of financing seasonal cash flow requirements for General Fund expenditures during the fiscal year ending June 30, 2016. The TRAN, plus accrued interest in the amount of $723,186, was repaid on June 30, 2016. Short-term debt activity pertaining to the TRAN was as follows for the year ended June 30, 2016:

	Beginning Balance	Additions	Payments	Ending Balance
Principal	$ -	$36,260,000	$(36,260,000)	$ -
Accrued interest	-	723,186	(723,186)	-
Total	$ -	$36,983,186	$(36,983,186)	$ -

Required Supplementary Information

Firefighter Academy 42 Graduation - May 2016

Required Supplementary Information

OCERS Retirement Plan
OCFA participates in the Orange County Employees Retirement System (OCERS), a cost-sharing multiple-employer, defined benefit pension plan that provides retirement, disability, and death benefits to general and safety members.

Extra Help Retirement Plan
OCFA administers a single-employer, defined benefit pension plan that provides retirement benefits for OCFA's less than half-time and extra help employees. Plan assets are accounted for in the Extra Help Retirement fiduciary fund.

Retiree Medical Plan
OCFA provides a single-employer, defined benefit plan for OCFA's full-time employees hired prior to January 1, 2007, which provides a monthly grant toward the cost of retirees' health insurance coverage. Plan assets are held in an irrevocable trust for the exclusive benefit of Plan participants and are administered by the Orange County Employees Retirement System (OCERS).

Orange County Fire Authority Safety Message

Smoke Alarms
(Part 2 of 3)

(Continued from Page 46)

Almost two-thirds of all home fire deaths occur in homes with no working smoke alarm. Protect your family by installing smoke alarms, inspecting them regularly, and practicing home fire drills.

Inspect

- ✓ Test all smoke alarms once a month. Press the test button to be sure the alarm is working.
- ✓ Follow the manufacturer's instructions for cleaning to keep smoke alarms working well.

(Continued on Page 107)

ORANGE COUNTY FIRE AUTHORITY

OCERS Retirement Plan
A Cost-Sharing, Multiple-Employer Defined Benefit Pension Plan
As of June 30, 2016
Last Ten Fiscal Years (A)

Schedule of OCFA's Proportionate Share of the Net Pension Liability

	Fiscal Year Ended		
	June 30, 2014	**June 30, 2015**	**June 30, 2016**
OCFA's proportion of the net pension liability	8.37%	9.19%	9.06%
OCFA's proportionate share of the net pension liability	$ 442,651,348	$ 466,968,323	$ 517,669,806
OCFA's covered payroll	$ 129,689,221	$ 129,187,729	$ 129,452,647
OCFA's proportionate share of the net pension liability as a percentage of covered payroll	341.32%	361.46%	399.89%
OCFA's proportionate share of plan fiduciary net position as a percentage of proportionate share of the total pension liability	69.66%	70.35%	68.90%
Plan's fiduciary net position	$ 10,821,318,000	$ 11,536,106,000	$ 11,657,318,000
Plan's fiduciary net position as a percentage of the total pension liability	67.16%	69.42%	67.10%

Notes to Schedule:

(A) Fiscal year ended June 30, 2015 was the first year of implementation; therefore only three years of data are available for presentation. Other years will be added as they become available

ORANGE COUNTY FIRE AUTHORITY

OCERS Retirement Plan
A Cost-Sharing, Multiple-Employer Defined Benefit Pension Plan
As of June 30, 2016
Last Ten Fiscal Years

Schedule of Contributions

	Fiscal Year Ended			
	June 30, 2007	**June 30, 2008**	**June 30, 2009**	**June 30, 2010**
Required contributions (actuarially determined)	$ 33,753,068	$ 35,709,526	$ 37,183,082	$ 42,331,507
Actual contributions	33,753,068	35,709,526	37,183,082	42,331,507
Contribution excess (deficiency)	$ -	$ -	$ -	$ -
Covered payroll	$ 95,823,423	$ 100,313,038	$ 104,571,731	$ 106,718,627
Actual contributions as a percentage of covered payroll	35.22%	35.60%	35.56%	39.67%
Notes to Schedule:				
Valuation dates (D)	12/31/2004	12/31/2005	12/31/2006	12/31/2007
Actuarial cost method	Entry Age	Entry Age	Entry Age	Entry Age
Amortization method	Level % of Pay	Level % of Pay	Level % of Pay	Level % of Pay
Assumed payroll growth	3.50%	3.50%	3.50%	3.50%
Remaining amortization period:				
Closed amortization of balance	30 years	29 years	28 years	27 years
As of	12/31/2004	12/31/2004	12/31/2004	12/31/2004
Asset valuation method	Market value	Market value	Market value	Market value
Investment rate of return	7.75%	7.75%	7.75%	7.75%
Inflation	3.50%	3.50%	3.50%	3.50%
Real salary increases	0.00%	0.00%	0.00%	0.00%
Projected salary increases:				
Safety	3.50%-9.50%	3.50%-9.50%	3.50%-9.50%	4.50%-13.50%
General	4.10%-10.50%	4.10%-10.50%	4.10%-10.50%	4.50%-11.50%
Cost of living adjustments	3.00%	3.00%	3.00%	3.00%
Retirement age	50-70 years	50-70 years	50-70 years	50-70 years
Mortality	(B)	(B)	(B)	(C)

(A) 1983 Group Annuity Table

(B) 1994 Group Annuity Mortality Table

(C) RP-2000 Combined Healthy Mortality Table

(D) Rates are effective 18 months after the valuation date for the fiscal year that begins July 1.

June 30, 2011	June 30, 2012	June 30, 2013	June 30, 2014	June 30, 2015	June 30, 2016
$ 45,543,856	$ 55,756,764	$ 61,206,670	$ 57,795,043	$ 66,186,858	$ 67,315,414
45,543,856	55,756,764	61,206,670	63,030,796	87,563,156	82,726,916
$ -	$ -	$ -	$ 5,235,753	$ 21,376,298	$ 15,411,502
$ 107,268,263	$ 111,444,130	$ 128,121,447	$ 125,869,628	$ 128,215,528	$ 132,248,620
42.46%	50.03%	47.77%	50.08%	68.29%	62.55%
12/31/2008	12/31/2009	12/31/2010	12/31/2011	12/31/2012	12/31/2013
Entry Age	Entry Age	Entry Age	Entry Age	Entry Age	Entry Age
Level % of Pay	Level % of Pay	Level % of Pay	Level % of Pay	Level % of Pay	Level % of Pay
3.50%	3.50%	3.50%	3.75%	3.75%	3.75%
26 years	25 years	24 years	23 years	22 years	20 years
12/31/2004	12/31/2004	12/31/2004	12/31/2004	12/31/2004	12/31/2012
Market value	Market value	Market value	Market value	Market value	Market value
7.75%	7.75%	7.75%	7.75%	7.25%	7.25%
3.50%	3.50%	3.50%	3.50%	3.25%	3.25%
0.00%	0.00%	0.00%	0.25%	0.50%	0.50%
4.50%-13.50%	4.50%-13.50%	4.50%-13.50%	4.75%-17.75%	4.75%-17.75%	4.75%-17.75%
4.50%-11.50%	4.50%-11.50%	4.50%-11.50%	4.75%-13.75%	4.75%-13.75%	4.75%-13.75%
3.00%	3.00%	3.00%	3.00%	3.00%	3.00%
50-70 years	50-70 years	50-70 years	50-75 years	50-75 years	49-75 years
(C)	(C)	(C)	(C)	(C)	(C)

ORANGE COUNTY FIRE AUTHORITY

Extra Help Retirement Plan
A Single-Employer Defined Benefit Pension Plan
As of June 30, 2016
For the Last Ten Fiscal Years (A)

Schedule of Changes in Net Pension Liability and Related Ratios

	Fiscal Year Ended		
	June 30, 2014	**June 30, 2015**	**June 30, 2016**
Total pension liability:			
Service cost	$ 8,030	$ -	$ 8,331
Interest	11,484	-	11,865
Differences between expected and actual experience	(3,269)	9,728	(131,777)
Changes of assumptions	-	-	47,323
Benefit payments, including refunds of member contributions	(8,676)	(6,459)	(10,642)
Net change in total pension liability	**7,569**	**3,269**	**(74,900)**
Total pension liability - beginning	302,551	310,120	313,389
Total pension liability - ending (a)	**310,120**	**313,389**	**238,489**
Plan fiduciary net position:			
Contributions - employer	2,117	2,481	2,267
Contributions - plan members	13,542	11,831	8,923
Net investment income	586	714	1,219
Benefit payments, including refunds of member contributions	(8,676)	(6,459)	(10,642)
Net change in plan fiduciary net position	**7,569**	**8,567**	**1,767**
Total pension net position - beginning	56,895	64,464	73,031
Total pension net position - ending (b)	**64,464**	**73,031**	**74,798**
Net pension liability - ending (a - b)	**$ 245,656**	**$ 240,358**	**$ 163,691**
Plan fiduciary net position as a % of the total pension liability	20.79%	23.30%	31.36%
Covered payroll	$ 205,340	$ 205,340	$ 108,526
Net pension liability as a % of covered payroll	119.63%	117.05%	150.83%
Employer contributions:			
Required and actual contributions	$ 2,117	$ 2,481	$ 2,267
Actual contributions as a % of required contributions	100.00%	100.00%	100.00%

Notes to Schedule:

(A) GASB Statements No. 67 and No. 68 were implemented during Fiscal Year 2013/14 and Fiscal Year 2014/15, respectively. Additional years will be added to this schedule as they become available in the future.

ORANGE COUNTY FIRE AUTHORITY

Extra Help Retirement Plan
A Single-Employer Defined Benefit Pension Plan
As of June 30, 2016
Last Three Actuarial Valuations (A)

Schedule of Funding Progress

	Actuarial Valuation Dated January 1, 2014	Actuarial Valuation Dated January 1, 2016
Total pension liability	$ 313,389	$ 238,489
Total pension net position	64,464	74,798
Net pension liability (NPL)	$ 248,925	$ 163,691
Funded ratio	20.57%	31.36%
Covered payroll	$ 205,340	$ 108,526
NPL as a percentage of covered payroll	121.23%	150.83%

Notes to Schedule:

	Actuarial Valuation Dated January 1, 2014	Actuarial Valuation Dated January 1, 2016
Changes in size or composition of plan members:		
Inactive; currently receiving benefits	-	-
Inactive; entitled to but not yet receiving benefits	10	49
Active	53	19
Total plan members	63	68
Change in assumptions:		
Discount rate	3.75%	2.90%
Inflation	3.00%	2.75%

(A) GASB Statements No. 67 and No. 68 were implemented during Fiscal Year 2013/14 and Fiscal Year 2014/15, respectively. The actuarial valuation dated January 1, 2014, was the first actuarial valuation completed for the plan. Additional years will be added to this schedule as they become available in the future.

ORANGE COUNTY FIRE AUTHORITY

Extra Help Retirement Plan
A Single-Employer Defined Benefit Pension Plan
As of June 30, 2016
For the Last Ten Fiscal Years (A)

Schedule of Investment Returns

	Fiscal Year Ended		
	June 30, 2014	**June 30, 2015**	**June 30, 2016**
Annual money-weighted rate of return, net of investment expense	**0.97%**	**1.24%**	**1.66%**

Notes to Schedule:

(A) GASB Statement No. 67, which requires ten years of history for this schedule, was implemented during Fiscal Year 2013/14. Additional years will be added as they become available in the future.

(B) OCFA also reports the OCERS Retirement Plan, a cost-sharing, multiple-employer defined benefit pension plan. OCERS issues a publicly available financial report that includes ten-year information regarding that Plan's money-weighted rate of return on pension plan investments. The separate OCERS report can be obtained from OCERS at 2223 Wellington Avenue, Santa Ana, California 92701.

ORANGE COUNTY FIRE AUTHORITY

Retiree Medical Plan
A Single-Employer Defined Benefit Plan
As of June 30, 2016
Last Three Actuarial Valuations

Schedule of Funding Progress

	Actuarial Valuation Dated		
	July 1, 2010	**July 1, 2012**	**July 1, 2014**
Entry age actuarial accrued liability (AAL)	$147,709,326	$156,623,184	$179,056,290
Actuarial value of assets	21,549,574	28,910,090	36,945,371
Unfunded AAL (UAAL)	$ 126,159,752	$ 127,713,094	$ 142,110,919
Funded ratio	14.59%	18.46%	20.63%
Covered payroll	$ 81,391,495	$ 75,432,000	$ 66,021,000
UAAL as a percentage of covered payroll	155.00%	169.31%	215.25%

Notes to Schedule:

	Actuarial Valuation Dated		
	July 1, 2010	July 1, 2012	July 1, 2014
Changes in size or composition of plan members:			
Current retirees and surviving spouses	388	471	573
Current active members	896	804	697
Terminated participants entitled but not yet eligible	5	9	13
Declined	n/a	13	14
	1,289	1,297	1,297

ORANGE COUNTY FIRE AUTHORITY

Retiree Medical Plan
A Single-Employer Defined Benefit Plan
As of June 30, 2016
Last Three Fiscal Years

Schedule of Contributions from the Employer and Other Contributing Entities

	Fiscal Year Ended		
	June 30, 2014	**June 30, 2015**	**June 30, 2016**
Annual required contribution (ARC)	$14,560,117	$14,953,772	$15,161,649
Interest on Net OPEB Obligation (NOPEBO)	2,135,737	2,404,266	2,877,656
Actuary's adjustment on the ARC	(2,234,473)	(3,653,066)	(4,488,920)
Annual OPEB cost	$14,461,381	$13,704,972	$13,550,385
Actual contributions	4,693,202	4,237,163	4,460,115
Net increase to Net OPEB obligation	$ 9,768,179	$ 9,467,809	$ 9,090,270
Actual contributions as a percentage of ARC	32.23%	28.34%	29.42%

Notes to Schedule:

Changes in assumptions: The discount rate changed per the table below.

	Actuarial Valuation Dated		
	July 1, 2012	July 1, 2014	July 1, 2014
Discount rate	5.50%	5.00%	5.00%

Supplementary Schedules

Waterworks Safety Event - May 2016

Major Governmental Funds

Capital Projects Funds

Communications and Information Systems
This fund is used to account for the significant acquisition, improvement, or replacement of specialized communications and information technology systems and/or equipment.

Fire Apparatus
This fund is used to account for the significant acquisition, improvement, or replacement of fire apparatus, including vehicles, trailers, and helicopters.

Fire Stations and Facilities
This fund is used to account for the significant acquisition, improvement, replacement, or construction of fire stations and facilities.

ORANGE COUNTY FIRE AUTHORITY
Communications and Information Systems
Budgetary Comparison Schedule
Year ended June 30, 2016
(With Comparative Data for Prior Year)

	2016				2015
	Budget Amounts		Actual	Variance with Final Budget Positive	Actual
	Original	Final	Amounts	(Negative)	Amounts
Budgetary fund balance, July 1	**$ 18,655,855**	**$ 18,655,855**	**$ 18,655,855**	**$ -**	**$ 18,051,752**
Resources (inflows):					
Use of money and property	169,956	91,196	111,865	20,669	57,488
Miscellaneous	-	312,605	312,605	-	253,528
Transfers in	2,127,821	78,187	78,187	-	3,000,906
Total resources (inflows)	**2,297,777**	**481,988**	**502,657**	**20,669**	**3,311,922**
Amounts available for appropriations	**20,953,632**	**19,137,843**	**19,158,512**	**20,669**	**21,363,674**
Charges to appropriation (outflows):					
Services and supplies	-	-	84,845	(84,845)	132,460
Capital outlay	6,625,685	1,794,533	71,395	1,723,138	1,441,647
Transfers out	-	-	-	-	1,133,712
Total charges to appropriations	**6,625,685**	**1,794,533**	**156,240**	**1,638,293**	**2,707,819**
Budgetary fund balance, June 30	**$ 14,327,947**	**$ 17,343,310**	**$ 19,002,272**	**$ 1,658,962**	**$ 18,655,855**

ORANGE COUNTY FIRE AUTHORITY
Fire Apparatus
Budgetary Comparison Schedule
Year ended June 30, 2016
(With Comparative Data for Prior Year)

	2016				2015
	Budget Amounts		Actual	Variance with Final Budget Positive	Actual
	Original	Final	Amounts	(Negative)	Amounts
Budgetary fund balance, July 1	**$ 25,440,432**	**$ 25,440,432**	**$ 25,440,432**	**$ -**	**$ 29,496,881**
Resources (inflows):					
Charges for services	1,428,656	1,428,656	1,421,540	(7,116)	1,381,161
Use of money and property	221,456	97,876	131,954	34,078	87,984
Miscellaneous	-	191,832	191,832	-	155,579
Developer contributions	1,576,744	1,576,744	-	(1,576,744)	527,289
Total resources (inflows)	**3,226,856**	**3,295,108**	**1,745,326**	**(1,549,782)**	**2,152,013**
Amounts available for appropriations	**28,667,288**	**28,735,540**	**27,185,758**	**(1,549,782)**	**31,648,894**
Charges to appropriation (outflows):					
Services and supplies	-	-	248	(248)	3,072
Capital outlay	15,510,454	17,042,593	3,201,526	13,841,067	3,673,667
Principal retirement	2,276,963	2,336,279	2,336,279	-	2,276,963
Interest and fiscal charges	254,760	195,444	195,444	-	254,760
Total charges to appropriations	**18,042,177**	**19,574,316**	**5,733,497**	**13,840,819**	**6,208,462**
Budgetary fund balance, June 30	**$ 10,625,111**	**$ 9,161,224**	**$ 21,452,261**	**$ 12,291,037**	**$ 25,440,432**

ORANGE COUNTY FIRE AUTHORITY
Fire Stations and Facilities
Budgetary Comparison Schedule
Year ended June 30, 2016
(With Comparative Data for Prior Year)

	2016				2015
	Budget Amounts		Actual	Variance with Final Budget Positive	Actual
	Original	Final	Amounts	(Negative)	Amounts
Budgetary fund balance, July 1	**$ 12,520,242**	**$ 12,520,242**	**$ 12,520,242**	**$ -**	**$ 15,409,887**
Resources (inflows):					
Use of money and property	220,188	65,619	74,414	8,795	44,075
Miscellaneous	-	185,165	185,165	-	150,172
Developer contributions	-	2,112,282	3,233,082	1,120,800	7,779,918
Total resources (inflows)	**220,188**	**2,363,066**	**3,492,661**	**1,129,595**	**7,974,165**
Amounts available for appropriations	**12,740,430**	**14,883,308**	**16,012,903**	**1,129,595**	**23,384,052**
Charges to appropriation (outflows):					
Services and supplies	854,248	906,077	53,433	852,644	37,696
Capital outlay	-	-	100,823	(100,823)	10,826,114
Total charges to appropriations	**854,248**	**906,077**	**154,256**	**751,821**	**10,863,810**
Budgetary fund balance, June 30	**$ 11,886,182**	**$ 13,977,231**	**$ 15,858,647**	**$ 1,881,416**	**$ 12,520,242**

Orange County Fire Authority Safety Message

Smoke Alarms
(Part 3 of 3)

(Continued from Page 94)

Almost two-thirds of all home fire deaths occur in homes with no working smoke alarm. Protect your family by installing smoke alarms, inspecting them regularly, and practicing home fire drills.

Protect

- ✓ Draw a home escape plan that shows two ways out of every room and an outside meeting place.
- ✓ Teach children what the smoke alarm sounds like and what to do if they hear it.
- ✓ Practice home fire drills at least twice a year.

ORANGE COUNTY FIRE AUTHORITY
Components of General Fund
Combining Balance Sheet
June 30, 2016
(With Comparative Data for Prior Year)

	General Operating Fund
Assets:	
Cash and investments	$ 41,784,650
Receivables:	
Accounts, net	2,442,570
Accrued interest	84,882
Prepaid costs and other assets	36,753,344
Due from other governments, net	10,050,255
	$ 91,115,701
Liabilities:	
Accounts payable	$ 2,143,427
Accrued liabilities	14,824,059
Unearned revenue	33,116
Due to other governments	123,047
Total liabilities	**17,123,649**
Deferred Inflows of Resources:	
Unavailable revenue	-
Total deferred inflows of resources	**-**
Fund balances:	
Nonspendable - prepaid costs	36,743,933
Restricted for:	
Operations Department	13,867
Committed to - SFF cities enhancements	-
Assigned to:	
Capital improvement program	-
Workers' compensation	-
Executive Management	36,690
Operations Department	51,484
Community Risk Reduction Department	15,845
Business Services Department	162,699
Support Services Department	119,743
Organizational Planning Department	21,000
Facilities projects	69,987
Communications and IT projects	-
Unassigned	36,756,804
Total fund balances	**73,992,052**
Total liabilities, deferred inflows of resources, and fund balances	**$ 91,115,701**

General Fund CIP	Structural Fire Entitlement	Self Insurance	Eliminations	Total General Fund 2016	Total General Fund 2015
$ 4,903,086	$ 608,903	$ 74,053,775	$ -	$ 121,350,414	$ 109,157,641
-	-	-	-	2,442,570	2,552,672
-	348	40,476	-	125,706	27,902
35,912	-	-	-	36,789,256	31,127,148
-	-	-	-	10,050,255	6,967,289
$ 4,938,998	**$ 609,251**	**$ 74,094,251**	**$ -**	**$ 170,758,201**	**$ 149,832,652**
$ 177,863	$ 24,787	$ 374,197	$ -	$ 2,720,274	$ 3,106,977
-	-	-	-	14,824,059	12,828,886
-	-	-	-	33,116	3,234,898
-	-	-	-	123,047	10,072,547
177,863	**24,787**	**374,197**	**-**	**17,700,496**	**29,243,308**
-	-	-	-	-	316,087
-	**-**	**-**	**-**	**-**	**316,087**
35,912	-	-	-	36,779,845	31,127,148
-	-	-	-	13,867	55,538
-	584,464	-	-	584,464	691,265
4,668,314	-	-	-	4,668,314	233,180
-	-	73,720,054	-	73,720,054	68,494,796
-	-	-	-	36,690	98,415
-	-	-	-	51,484	46,859
-	-	-	-	15,845	354
-	-	-	-	162,699	66,963
-	-	-	-	119,743	207,784
-	-	-	-	21,000	33,890
-	-	-	-	69,987	52,061
56,909	-	-	-	56,909	48,528
-	-	-	-	36,756,804	19,116,476
4,761,135	**584,464**	**73,720,054**	**-**	**153,057,705**	**120,273,257**
$ 4,938,998	**$ 609,251**	**$ 74,094,251**	**$ -**	**$ 170,758,201**	**$ 149,832,652**

ORANGE COUNTY FIRE AUTHORITY
Components of General Fund
Combining Schedule of Revenues, Expenditures and Changes in Fund Balances
Year ended June 30, 2016
(With Comparative Data for Prior Year)

	General Operating Fund
Revenues:	
Taxes	$ 219,840,417
Intergovernmental	25,978,081
Charges for services	102,408,896
Use of money and property	961,795
Miscellaneous	2,096,571
Total revenues	**351,285,760**
Expenditures:	
Current - public safety:	
Salaries and benefits	307,143,676
Services and supplies	27,411,361
Capital outlay	298,162
Debt service:	
Interest and fiscal charges	740,437
Total expenditures	**335,593,636**
Excess (deficiency) of revenues over (under) expenditures	15,692,124
Other financing sources (uses):	
Transfers in	-
Transfers out	(5,516,980)
Sale of capital and other assets	24,470
Insurance recoveries	121,288
Total other financing sources (uses)	**(5,371,222)**
Net change in fund balances	10,320,902
Fund balances, beginning of year, as restated	63,671,150
Fund balances, end of year	**$ 73,992,052**

General Fund CIP	Structural Fire Entitlement	Self Insurance	Eliminations	Total General Fund 2016	Total General Fund 2015
$ -	$ -	$ -	$ -	$ 219,840,417	$ 205,141,237
-	-	-	-	25,978,081	23,565,214
-	-	12,729,592	(12,729,592)	102,408,896	100,619,516
-	3,511	387,777	-	1,353,083	651,975
-	-	-	-	2,096,571	1,120,697
-	**3,511**	**13,117,369**	**(12,729,592)**	**351,677,048**	**331,098,639**
-	-	-	(12,729,592)	294,414,084	285,988,997
751,308	110,312	7,892,111	-	36,165,092	40,317,142
324,744	-	-	-	622,906	703,370
-	-	-	-	740,437	330,741
1,076,052	**110,312**	**7,892,111**	**(12,729,592)**	**331,942,519**	**327,340,250**
(1,076,052)	(106,801)	5,225,258	-	19,734,529	3,758,389
5,438,793	-	-	(5,438,793)	-	3,844,414
-	-	-	5,438,793	(78,187)	(3,000,906)
-	-	-	-	24,470	134,123
-	-	-	-	121,288	32,948
5,438,793	**-**	**-**	**-**	**67,571**	**1,010,579**
4,362,741	(106,801)	5,225,258	-	19,802,100	4,768,968
398,394	691,265	68,494,796	-	133,255,605	115,504,289
$ 4,761,135	**$ 584,464**	**$ 73,720,054**	**$ -**	**$ 153,057,705**	**$ 120,273,257**

ORANGE COUNTY FIRE AUTHORITY
Components of General Fund
Combining Original Budget
Year ended June 30, 2016

	General Operating Fund	General Fund CIP	Structural Fire Entitlement
Budgetary fund balance, July 1	**$ 63,671,150**	**$ 398,394**	**$ 691,265**
Resources (inflows):			
Taxes	214,445,545	-	-
Intergovernmental	14,942,177	-	-
Charges for services	101,969,304	-	-
Use of money and property	658,828	-	11,999
Miscellaneous	1,008,733	-	-
Transfers in	-	5,234,000	-
Sale of capital and other assets	50,000	-	-
Total resources (inflows)	**333,074,587**	**5,234,000**	**11,999**
Amounts available for appropriations	**396,745,737**	**5,632,394**	**703,264**
Charges to appropriation (outflows):			
Salaries and benefits	290,154,202	-	-
Services and supplies	35,053,663	1,242,528	-
Capital outlay	236,504	4,040,000	-
Interest and fiscal charges	318,050	-	-
Transfers out	7,361,821	-	-
Total charges to appropriations	**333,124,240**	**5,282,528**	**-**
Budgetary fund balance, June 30	**$ 63,621,497**	**$ 349,866**	**$ 703,264**

Self Insurance	Eliminations	Total General Fund 2016
$ 68,494,796	**$ -**	**$ 133,255,605**
-	-	214,445,545
-	-	14,942,177
12,729,592	(12,729,592)	101,969,304
887,704	-	1,558,531
-	-	1,008,733
-	(5,234,000)	-
-	-	50,000
13,617,296	**(17,963,592)**	**333,974,290**
82,112,092	**(17,963,592)**	**467,229,895**
-	(12,729,592)	277,424,610
7,702,911	-	43,999,102
-	-	4,276,504
-	-	318,050
-	(5,234,000)	2,127,821
7,702,911	**(17,963,592)**	**328,146,087**
$ 74,409,181	**$ -**	**$ 139,083,808**

ORANGE COUNTY FIRE AUTHORITY
Components of General Fund
Combining Final Budget
Year ended June 30, 2016

	General Operating Fund	General Fund CIP	Structural Fire Entitlement
Budgetary fund balance, July 1	**$ 63,671,150**	**$ 398,394**	**$ 691,265**
Resources (inflows):			
Taxes	218,156,295	-	-
Intergovernmental	23,926,860	-	-
Charges for services	101,173,891	-	-
Use of money and property	689,516	-	2,921
Miscellaneous	2,203,027	-	-
Transfers in	-	5,438,793	-
Sale of capital and other assets	50,480	-	-
Insurance recoveries	79,433	-	-
Total resources (inflows)	**346,279,502**	**5,438,793**	**2,921**
Amounts available for appropriations	**409,950,652**	**5,837,187**	**694,186**
Charges to appropriations (outflows):			
Salaries and benefits	309,677,422	-	-
Services and supplies	30,433,960	1,423,143	85,524
Capital outlay	590,562	4,064,178	-
Interest and fiscal charges	754,436	-	-
Transfers out	5,516,980	-	-
Total charges to appropriations	**346,973,360**	**5,487,321**	**85,524**
Budgetary fund balance, June 30	**$ 62,977,292**	**$ 349,866**	**$ 608,662**

Self Insurance	Eliminations	Total General Fund 2016
$ 68,494,796	**$ -**	**$ 133,255,605**
-	-	218,156,295
-	-	23,926,860
12,729,592	(12,729,592)	101,173,891
315,984	-	1,008,421
-	-	2,203,027
-	(5,438,793)	-
-	-	50,480
-	-	79,433
13,045,576	**(18,168,385)**	**346,598,407**
81,540,372	**(18,168,385)**	**479,854,012**
-	(12,729,592)	296,947,830
7,702,911	-	39,645,538
-	-	4,654,740
-	-	754,436
-	(5,438,793)	78,187
7,702,911	**(18,168,385)**	**342,080,731**
$ 73,837,461	**$ -**	**$ 137,773,281**

Orange County Fire Authority Safety Message

Vegetation Management
(Part 1 of 4)

Vegetation management is controlling plant material to prevent wildfire spread. It requires a constant commitment to follow the "four R's" of vegetation management to reduce the threat of wildfire.

Removal

- ✓ Remove all dead and dying plants within 100 feet of your home.
- ✓ Identify and remove plants found on OCFA's "Undesired Plant List." These plants are considered to be undesirable and invasive due to their physical or chemical characteristics.

(Continued on Page 118)

Statistical

Section

ORANGE COUNTY FIRE AUTHORITY

Overview of the Statistical Section

The Statistical Section provides a context for understanding information in the financial statements, note disclosures and required supplementary information and how that information relates to the OCFA's overall financial health. The detailed schedules presented in the Statistical Section are grouped into five sections pertaining to financial trends, revenue capacity, debt capacity, demographic and economic information, and operating information.

Financial Trends Information – These schedules contain trend information to assist the reader in understanding how the OCFA's financial performance and well-being have changed over time.

Revenue Capacity Information – These schedules contain information to assist the reader in assessing property taxes, the OCFA's most significant local revenue source.

Debt Capacity Information – These schedules present information to assist the reader in assessing the affordability of the OCFA's current levels of outstanding debt and its ability to issue additional debt in the future.

Demographic and Economic Information – These schedules offer demographic and economic indicators to assist the reader in understanding the environment within which the OCFA's financial activities take place.

Operating Information – These schedules contain data to assist the reader in understanding how the information in the financial report relates to the services provided by and the activities performed by the OCFA.

Orange County Fire Authority Safety Message

Vegetation Management
(Part 2 of 4)

(Continued from Page 116)

Vegetation management is controlling plant material to prevent wildfire spread. It requires a constant commitment to follow the "four R's" of vegetation management to reduce the threat of wildfire.

Reduction

- ✓ Prune and thin plants within 100 feet of your home and your neighbor's home.
- ✓ Provide 4 feet vertical separation between shrub tops and lower tree branches to reduce "fuel ladders."
- ✓ Use horizontal separation guidelines for plants over 2 feet in height.
- ✓ Keep all shrubs within 10 feet of your home trimmed to 2 feet or lower.
- ✓ Prune or remove plants near windows
- ✓ Remove all tree branches or plants within 10 feet of chimney outlets.
- ✓ Move wood piles at least 30 feet from your home or to the property line.
- ✓ Keep annual grasses and weeds cut to 4 inches or less.

(Continued on Page 128)

ORANGE COUNTY FIRE AUTHORITY

Financial Trends Information

Net Position by Component – Presents net position of the OCFA's governmental activities by the three individual components of net position for each of the last ten fiscal years.

Changes in Net Position – Presents the changes in net position of governmental activities for each of the last ten fiscal years.

Fund Balances of Governmental Funds – Presents information on the fund balances of the General Fund and the aggregate of all other governmental funds for each of the last ten fiscal years.

Changes in Fund Balances of Governmental Funds – Presents information on the changes in fund balances for total governmental funds for each of the last ten fiscal years, including the ratio of debt service expenditures to noncapital expenditures.

ORANGE COUNTY FIRE AUTHORITY
Net Position by Component
Last Ten Fiscal Years
(accrual basis of accounting)

	Fiscal Year ended June 30			
	2007	2008	2009	2010
Governmental activities:				
Net investment in capital assets	$ 138,152,825	$ 163,340,815	$ 172,293,178	$ 183,717,406
Restricted	15,179,905	11,331,122	7,394,371	1,623,121
Unrestricted	93,182,195	120,539,628	129,119,689	115,965,726
Total governmental activities net position	$ 246,514,925	$ 295,211,565	$ 308,807,238 (1)	$ 301,306,253

SOURCE: OCFA Comprehensive Annual Financial Reports

NOTES:
(1) Restricted net position as of June 30, 2009, pertained to requirements of the revenue bonds issued to construct the Regional Fire Operations and Training Center. Those revenue bonds were issued in Fiscal Year 2001/02 and repaid in full during Fiscal Year 2009/10.

(2) Restricted net position as of June 30, 2012, included a one-time, $1.5 million unperformed purchase order for self-contained breathing apparatus that was funded by a federal grant.

(3) GASB Statement No. 68 was implemented during Fiscal Year 2014/15, which required a $362 million restatement to beginning net position in order to fully reflect net OCFA's net pension liabilities. This adjustment contributed to an overall negative balance in unrestricted net position as of June 30, 2015 and thereafter.

2011	2012	2013	2014	2015	2016
$ 186,297,543	$ 183,584,385	$ 181,363,364	$ 180,917,654	$ 190,800,116	$ 187,910,677
1,627,233	3,252,969	1,690,858	1,076,322	588,770	547,099
99,704,595	81,450,846	74,510,482	61,760,639	(360,513,259)	(349,121,694)
$ 287,629,371	$ 268,288,200	$ 257,564,704	$ 243,754,615	$ (169,124,373)	$ (160,663,918)
	(2)			(3)	

ORANGE COUNTY FIRE AUTHORITY
Changes in Net Position
Last Ten Fiscal Years
(accrual basis of accounting)

	Fiscal Year ended June 30			
Governmental Activities	2007	2008	2009	2010
Expenses - public safety:				
Salaries and benefits	$ 187,129,443	$ 199,095,873	$ 209,092,693	$ 211,729,989
Services and supplies	27,139,113	31,669,603	31,425,592	24,318,065
Depreciation and amortization	7,000,915	7,399,902	7,923,947	8,432,793
Interest on long-term debt	1,871,983	1,410,673	1,718,137	855,577
Total program expenses	223,141,454	239,576,051	250,160,369	245,336,424
Program revenues - public safety:				
Charges for services	61,130,982	69,187,051	67,305,621	63,743,942
Operating grants and contributions	5,537,722	6,835,746	5,981,800	5,784,969
Capital grants and contributions	4,172,358	22,092,218	140,903	1,415,618
Total program revenues	70,841,062	98,115,015	73,428,324	70,944,529
Net program revenues (expenses)	(152,300,392)	(141,461,036)	(176,732,045)	(174,391,895)
General revenues:				
Property taxes	166,639,162	182,536,717	184,696,756	179,001,919
Investment income	7,912,428	6,295,464	3,704,964	1,006,128
Gain on disposal of capital assets	-	-	-	-
Miscellaneous	903,992	730,733	1,925,998	890,127
Total general revenues	175,455,582	189,562,914	190,327,718	180,898,174
Changes in net position	$ 23,155,190	$ 48,101,878	$ 13,595,673	$ 6,506,279
		(1)		

SOURCE: OCFA Comprehensive Annual Financial Reports

NOTES:
(1) During Fiscal Year 2007/08, three fire stations valued at $17.9 million were contributed to OCFA by The Irvine Company and recognized as revenue (capital grants and contributions).

(2) The City of Santa Ana became a member city of OCFA during Fiscal Year 2011/12 (April 2012).

(3) GASB Statement No. 68 was implemented during Fiscal Year 2014/15, which required that pension expense be adjusted annually to fully reflect the accrual-based cost incurred during the year. OCFA recognized an increase to its pension expense totaling $39.9 million during the year ended June 30, 2015. That amount is included within salaries and benefits.

2011	2012	2013	2014	2015	2016
$ 221,031,439	$ 240,084,607	$ 264,067,489	$ 266,764,367	$ 335,419,737	$ 316,292,785
30,736,034	37,069,099	45,879,501	47,912,808	46,073,201	35,127,573
8,970,508	9,300,853	9,793,491	9,612,453	9,050,195	9,267,982
677,910	494,014	367,701	311,327	582,565	917,320
261,415,891	286,948,573	320,108,182	324,600,955	391,125,698	361,605,660
61,975,963	76,347,126	102,875,410	106,874,513	113,150,325	117,263,679
5,963,648	6,580,681	19,523,853	10,339,966	11,410,019	12,165,015
395,180	3,926,275	2,811,180	1,462,540	9,182,195	3,331,088
68,334,791	86,854,082	125,210,443	118,677,019	133,742,539	132,759,782
(193,081,100)	(200,094,491)	(194,897,739)	(205,923,936)	(257,383,159)	(228,845,878)
177,181,086	177,728,290	181,720,253	190,873,689	205,141,237	219,840,417
611,408	524,602	(136,493)	823,010	839,864	1,654,065
39,803	79,705	11,924	21,834	63,953	6,000
835,021	2,420,723	4,329,603	1,200,195	1,235,004	2,823,503
178,667,318	180,753,320	185,925,287	192,918,728	207,280,058	224,323,985
$ (14,413,782)	$ (19,341,171)	$ (8,972,452)	$ (13,005,208)	$ (50,103,101)	$ (4,521,893)
	(2)			(3)	

ORANGE COUNTY FIRE AUTHORITY
Fund Balances of Governmental Funds
Last Ten Fiscal Years
(modified accrual basis of accounting)

	Fiscal Year ended June 30			
	2007	2008	2009	2010
General Fund:				
Reserved	$ 1,476,790	$ 1,519,961	$ 1,417,069	$ -
Unreserved	54,391,252	60,436,769	67,926,629	-
Nonspendable	-	-	-	117,473
Restricted	-	-	-	111,305
Committed	-	-	-	861,116
Assigned	-	-	-	37,621,864
Unassigned	-	-	-	41,985,648
Total General Fund	$ 55,868,042	$ 61,956,730	$ 69,343,698	$ 80,697,406
All other governmental funds:				
Reserved	$ 14,066,095	$ 8,446,422	$ 14,752,366	$ -
Unreserved, reported in:				
Special revenue funds	46,998,762	62,633,870	75,515,265	-
Capital projects funds	5,602,562	16,718,235	13,344,809	-
Debt service funds	12,648,661	8,738,484	4,752,258	-
Nonspendable	-	-	-	567,349
Restricted	-	-	-	1,015,700
Assigned	-	-	-	87,476,588
Total all other governmental funds	$ 79,316,080	$ 96,537,011	$ 108,364,698	$ 89,059,637
				(1)

SOURCE: OCFA Comprehensive Annual Financial Reports

NOTES:
(1) OCFA implemented GASB Statement No. 54 during the fiscal year ended June 30, 2011. This statement eliminated the previous fund balance categories (reserved and unreserved), and replaced them with five new categories (nonspedable, restricted, committed, assigned, unassigned). Fund balance amounts as of June 30, 2010, and thereafter reflect the new categories; however, all previous fiscal years are presented using the old categories.

2011	2012	2013	2014	2015	2016
$ -	$ -	$ -	$ -	$ -	$ -
-	-	-	-	-	-
23,186,680	22,756,709	26,727,849	30,560,638	31,127,148	36,779,845
111,980	1,699,787	137,676	32,282	55,538	13,867
797,935	1,372,789	1,268,160	784,617	691,265	584,464
35,550,989	34,715,397	53,668,608	61,236,092	69,282,830	78,922,725
25,592,531	25,751,128	25,782,851	22,890,660	19,116,476	36,756,804
$ 85,240,115	$ 86,295,810	$ 107,585,144	$ 115,504,289	$ 120,273,257	$ 153,057,705
$ -	$ -	$ -	$ -	$ -	$ -
-	-	-	-	-	-
-	-	-	-	-	-
-	-	-	-	-	-
478,449	405,815	352,318	284,349	32,946	-
1,515,253	1,553,182	1,553,182	1,044,040	533,232	533,232
78,023,210	74,037,637	67,317,090	64,340,833	56,050,351	55,779,948
$ 80,016,912	$ 75,996,634	$ 69,222,590	$ 65,669,222	$ 56,616,529	$ 56,313,180

ORANGE COUNTY FIRE AUTHORITY
Changes in Fund Balances of Governmental Funds
Last Ten Fiscal Years
(modified accrual basis of accounting)

	Fiscal Year ended June 30			
	2007	2008	2009	2010
Revenues:				
Taxes	$ 166,639,162	$ 182,536,717	$ 184,696,756	$ 179,001,919
Intergovernmental	15,643,174	24,168,953	18,898,459	14,202,209
Charges for services	53,191,997	53,510,278	54,125,964	55,325,007
Use of money and property	8,379,245	7,336,664	4,148,889	1,341,991
Miscellaneous	428,475	982,487	2,517,891	1,333,170
Developer contributions	1,096,262	1,744,392	-	551,365
Total revenues	245,378,315	270,279,491	264,387,959	251,755,661
Expenditures:				
Current - public safety:				
Salaries and benefits	186,074,623	195,481,030	203,790,256	206,942,045
Services and supplies	27,146,936	31,386,487	28,561,308	28,521,125
Capital outlay	9,714,765	13,323,621	32,624,294	9,647,853
Debt service:				
Principal retirement	5,186,766	4,867,453	5,933,911	13,370,586
Interest and fiscal charges	2,414,453	2,526,877	2,119,347	1,459,383
Issuance costs	-	-	-	-
Total expenditures	230,537,543	247,585,468	273,029,116	259,940,992
Excess (deficiency) of revenues over (under) expenditures	14,840,772	22,694,023	(8,641,157)	(8,185,331)
Other financing sources (uses):				
Transfers in	24,350,337	29,914,910	30,257,506	10,608,277
Transfers out	(24,350,337)	(29,914,910)	(30,257,506)	(10,608,277)
Issuance of long-term debt	-	-	21,515,238	-
Refinanced long-term debt	-	-	-	-
Sale of capital and other assets	55,946	93,807	93,480	162,533
Insurance recoveries	-	-	81,576	71,445
Total other financing sources (uses)	55,946	93,807	21,690,294	233,978
Net change in fund balances	$ 14,896,718	$ 22,787,830	$ 13,049,137	$ (7,951,353)
Debt service as a percentage of noncapital expenditures	3.4%	3.2%	3.3%	5.9%

SOURCE: OCFA Comprehensive Annual Financial Reports

2011	2012	2013	2014	2015	2016
$ 177,181,086	$ 177,728,290	$ 181,720,253	$ 190,873,689	$ 205,141,237	$ 219,840,417
11,080,619	12,894,882	28,883,649	19,111,811	23,565,214	25,978,081
56,582,867	65,556,905	95,904,052	97,705,183	102,000,677	103,830,436
822,002	660,621	(20,556)	932,284	841,522	1,671,316
1,320,856	2,753,421	5,111,908	1,677,853	1,679,976	2,786,173
43,200	10,140	538,260	1,271,400	8,307,207	3,233,082
247,030,630	259,604,259	312,137,566	311,572,220	341,535,833	357,339,505
211,801,889	228,452,010	255,301,913	257,134,030	285,988,997	294,414,084
28,207,018	30,737,551	32,613,137	40,187,878	40,490,370	36,303,618
9,899,979	932,034	5,420,102	7,681,418	16,644,798	3,996,650
1,911,912	2,139,694	2,162,809	2,219,152	2,276,963	2,336,279
890,067	635,351	484,851	421,845	585,501	935,881
-	286,599	-	-	-	-
252,710,865	263,183,239	295,982,812	307,644,323	345,986,629	337,986,512
(5,680,235)	(3,578,980)	16,154,754	3,927,897	(4,450,796)	19,352,993
4,137,811	-	381,222	5,370,375	6,845,320	78,187
(4,137,811)	-	(381,222)	(5,370,375)	(6,845,320)	(78,187)
-	16,756,078	-	-	-	-
-	(16,377,093)	-	-	-	-
434,914	146,317	58,051	77,077	134,123	24,470
8,405	89,095	53,529	360,803	32,948	121,288
443,319	614,397	111,580	437,880	167,071	145,758
$ (5,236,916)	$ (2,964,583)	$ 16,266,334	$ 4,365,777	$ (4,283,725)	$ 19,498,751
1.2%	1.1%	0.9%	0.9%	0.9%	1.0%

Orange County Fire Authority Safety Message

Vegetation Management
(Part 3 of 4)

(Continued from Page 118)

Vegetation management is controlling plant material to prevent wildfire spread. It requires a constant commitment to follow the "four R's" of vegetation management to reduce the threat of wildfire.

Replacement

- ✓ Replace fire-prone plants with fire-resistant and drought tolerant plants. See the OCFA "Planting Guide" for recommendations.
- ✓ When putting in new plants, leave enough space for them to grow to mature size.

(Continued on Page 138)

ORANGE COUNTY FIRE AUTHORITY

Revenue Capacity Information

Assessed Value and Estimated Actual Value of Taxable Property – Presents information on the assessed property values of each city and the unincorporated area within the OCFA's jurisdiction for each of the last ten fiscal years.

Property Tax Rates of Direct and Overlapping Governments – Presents the County of Orange's direct property tax rate, as well as the rates of any overlapping governments that are applied to the same revenue base.

Principal Property Tax Payers – Presents information about the OCFA's ten largest property tax payers for the current fiscal year, as compared to nine fiscal years ago.

Property Tax Levies and Collections – Presents information on the levy and subsequent collection of OCFA's property taxes for each of the last ten fiscal years.

ORANGE COUNTY FIRE AUTHORITY
Assessed Value (1) and Estimated Actual Value of Taxable Property
Last Ten Fiscal Years
(dollars in thousands)

Jurisdiction	FY 2006/07	FY 2007/08	FY 2008/09	FY 2009/10
Buena Park	$ 6,750,905	$ 7,351,653	$ 7,611,793	$ 7,438,787
Placentia	4,628,986	4,991,175	5,070,123	4,967,651
San Clemente	11,366,168	12,486,976	12,855,038	12,631,337
Santa Ana (4)	n/a	n/a	n/a	n/a
Seal Beach	3,585,301	3,875,902	4,256,884	4,241,221
Stanton	1,972,744	2,184,177	2,195,788	2,070,815
Tustin	8,170,655	9,070,627	9,958,561	9,501,069
Westminster	6,215,306	6,640,057	6,775,451	6,698,153
Total cash contract cities (3)	42,690,065	46,600,567	48,723,638	47,549,033
Aliso Viejo	6,968,167	7,499,861	7,792,144	7,553,177
Cypress	5,085,127	5,421,886	5,604,677	5,529,005
Dana Point	7,693,012	8,532,709	8,879,909	8,763,402
Irvine	39,280,256	44,382,983	47,257,608	47,212,001
Laguna Hills	5,313,973	5,736,525	5,692,646	5,589,417
Laguna Niguel	11,347,524	12,073,542	12,227,117	11,883,056
Laguna Woods	2,118,937	2,262,295	2,295,254	2,273,717
Lake Forest	10,165,487	10,896,488	11,189,197	10,915,562
La Palma	1,509,520	1,636,875	1,685,812	1,695,126
Los Alamitos	1,416,837	1,515,499	1,582,738	1,589,309
Mission Viejo	12,449,764	13,246,125	13,357,566	13,104,698
Rancho Santa Margarita	6,575,282	6,977,082	6,921,865	6,617,903
San Juan Capistrano	5,260,585	5,794,133	5,961,050	5,835,957
Villa Park	1,234,034	1,311,588	1,355,557	1,359,734
Yorba Linda	9,969,593	10,909,311	11,165,576	10,897,981
Unincorporated	19,843,722	21,846,485	22,212,379	21,447,511
Total SFF jurisdictions (2)	146,231,820	160,043,387	165,181,095	162,267,556
Percentage change from prior year	11.53%	9.44%	3.21%	-1.76%
Total assessed valuation	$ 188,921,885	$ 206,643,954	$ 213,904,733	$ 209,816,589
Total direct tax rate	0.11%	0.11%	0.11%	0.11%

SOURCE: County of Orange, Auditor-Controller, Assessed Valuations by Fiscal Year
http://acweb1.ocgov.com/ac/txfdr_Civica/av/default_egov.asp

NOTES:

(1) Assessed value is stated at taxable full cash value. These values may include an increased value over the base year for that portion of the city or district which lies within a redevelopment agency.

(2) Assessed value for these cities is part of the Structural Fire Fund (SFF).

(3) These cities pay for services on a cash contract basis. Assessed value is shown for comparison only.

(4) Santa Ana joined OCFA on April 20, 2012.

FY 2010/11	FY 2011/12	FY 2012/13	FY 2013/14	FY 2014/15	FY 2015/16
$ 7,478,553	$ 7,484,717	7,602,927	7,886,342	8,313,496	8,769,022
4,969,023	5,007,558	5,080,849	5,203,417	5,519,085	5,878,473
12,431,717	12,356,019	12,506,118	12,824,727	13,666,851	14,447,434
n/a	20,100,864	20,339,779	21,119,683	22,075,383	23,013,226
4,282,032	4,434,345	4,480,557	4,580,472	4,891,060	5,081,691
2,042,112	2,063,293	2,073,752	2,144,270	2,297,508	2,433,266
9,419,294	9,378,899	9,502,173	9,732,381	10,292,805	11,004,027
6,779,972	6,935,762	7,023,383	7,176,141	7,628,669	8,279,644
47,402,703	67,761,457	68,609,538	70,667,433	74,684,857	78,906,783
7,459,562	7,511,408	7,605,524	7,877,812	8,440,740	8,765,964
5,514,794	5,560,190	5,666,354	5,854,809	6,104,218	6,463,650
8,687,748	8,735,352	8,844,364	9,126,750	9,787,132	10,513,667
46,538,576	47,136,231	48,646,093	51,002,248	55,693,885	60,912,694
5,460,470	5,463,649	5,513,066	5,643,545	5,961,947	6,256,109
11,892,951	11,991,939	12,116,601	12,402,919	13,270,851	14,015,647
2,214,363	2,186,990	2,193,624	2,237,288	2,424,736	2,620,217
10,744,518	10,721,083	10,885,724	11,238,775	11,920,081	12,672,969
1,698,469	1,698,169	1,718,007	1,744,907	1,829,353	1,904,950
1,616,120	1,603,255	1,638,193	1,674,933	1,778,110	1,887,771
13,157,979	13,226,115	13,320,574	13,639,460	14,533,544	15,262,434
6,605,397	6,623,819	6,679,191	6,759,144	7,231,597	7,572,862
5,817,501	5,799,444	5,833,269	6,039,344	6,443,224	6,828,239
1,353,409	1,372,687	1,398,666	1,466,599	1,527,255	1,596,806
10,936,312	11,262,427	11,484,958	11,857,840	12,668,130	13,488,124
21,485,307	21,509,471	21,332,072	21,915,863	23,573,390	24,999,336
161,183,476	162,402,229	164,876,280	170,482,236	183,188,193	195,761,439
-0.67%	0.76%	1.52%	3.40%	7.45%	6.86%
$ 208,586,179	$ 230,163,686	$ 233,485,818	$ 241,149,669	$ 257,873,050	$ 274,668,222
0.11%	0.11%	0.11%	0.11%	0.11%	0.11%

(5) In 1978, the voters of the State of California passed Proposition 13 which limited property taxes to a total maximum rate of 1% based upon the assessed value of the property being taxed. Each year, the assessed value of property may be increased by an "inflation factor" (limited to a maximum increase of 2%). With few exceptions, property is only re-assessed at the time that it is sold to a new owner. At that point, the new assessed value is reassessed at the purchase price of the property sold. The assessed valuation data shown above represents the only data currently available with respect to the actual market value of taxable property and is subject to the limitations described above.

ORANGE COUNTY FIRE AUTHORITY
Property Tax Rates of Direct and Overlapping Governments
Last Ten Fiscal Years

	County of Orange (B)			OCFA (B)
	Overlapping	Direct		Direct
	Basic Operating Levy	Debt Service	Total	Basic Operating Levy
2007	1.00000	0.00000	1.00000	0.0011
2008	1.00000	0.00000	1.00000	0.0011
2009	1.00000	0.00000	1.00000	0.0011
2010	1.00000	0.00000	1.00000	0.0011
2011	1.00000	0.00000	1.00000	0.0011
2012	1.00000	0.00000	1.00000	0.0011
2013	1.00000	0.00000	1.00000	0.0011
2014	1.00000	0.00000	1.00000	0.0011
2015	1.00000	0.00000	1.00000	0.0011
2016	1.00000	0.00000	1.00000	0.0011
	(A)	(A)		(C)

SOURCE:

(A) County of Orange, Auditor-Controller, Tax Rate Books by Fiscal Year
http://acweb1.ocgov.com/ac/txfdr_civica/tr/index_egov.asp

(B) Data for the entire County of Orange is not limited to the cities/unincorporated areas served by the Orange County Fire Authority. Data for OCFA is limited to its member cities that are part of the Structural Fire Fund (SFF).

(C) Direct tax rate calculation per the "Assessed Value and Estimated Actual Value of Taxable Property" schedule included in this report.

NOTE: This schedule presents tax rates per $100 of assessed/full cash value.

ORANGE COUNTY FIRE AUTHORITY
Principal Property Tax Payers
Current and Nine Years Ago
(Dollars in Thousands)

	Fiscal Year 2006/2007 (A)			Fiscal Year 2015/16 (B)		
Property Tax Payer	Actual Taxes Levied	Rank	Percent of Total Taxes Levied	Actual Taxes Levied	Rank	Percent of Total Taxes Levied
The Irvine Company	$ 50,787	1	1.09%	$ 111,040	1	1.92%
Irvine Apartment Communities	$ 19,409	3	0.42%			
Irvine Co. of W. VA.	$ 5,382	9	0.12%			
Irvine Community Development	$ 5,148	10	0.11%			
	$ 80,726			$ 111,040		
Walt Disney Parks & Resorts U.S.				$ 48,011	2	0.83%
Walt Disney World Co.	$ 30,388	2	0.65%			
Walt Disney World Company	$ 7,547	6	0.16%			
	$ 37,935			$ 48,011		
Southern California Edison Company	$ 18,548	4	0.40%	$ 34,709	3	0.60%
Heritage Fields El Toro	$ 8,424	5	0.18%	$ 11,943	4	0.21%
Pacific Bell Telephone Company (AT&T)	$ 6,464	8	0.14%	$ 10,921	5	0.19%
United Laguna Hills Mutual	$ 7,470	7	0.16%	$ 8,735	6	0.15%
Southern California Gas Company				$ 5,934	7	0.10%
Oxy USA, Inc.				$ 5,575	8	0.10%
B. Braun Medical, Inc.				$ 4,302	9	0.07%
Bella Terra Associates, LLC				$ 3,999	10	0.07%

SOURCES:
(A) OCFA Comprehensive Annual Financial Report for Fiscal Year 2006/07

(B) County of Orange, Treasurer-Tax Collector, Tax Collector Top 20 Taxpayer List for Fiscal Year 2015/16 (http://tcc.ocgov.com/rptstats/stats). Taxpayers are grouped under a parent company, if identifiable.

NOTE:
This schedule presents data for the entire County of Orange and is not limited to the cities/unincorporated areas served by the Orange County Fire Authority.

ORANGE COUNTY FIRE AUTHORITY
Property Tax Levies and Collections
Last Ten Fiscal Years
(dollars in thousands)

Fiscal Year ended June 30	Taxes Levied for the Fiscal Year	Collected within the Fiscal Year of Levy		Collection of Prior Year Levies		Collection of Penalties and Interest		Total Collection to Date		Collection of Property Tax Increment (2) Pass-Through	
		Amount	% of Levy	Teeter Plan	Delinquencies and Other	Delinquency Penalties	Interest	Total Amounts Collected	% of Levy	RDA	H&S
2006	$ 154,294	$ 149,252	96.7%	$ 2,104	$ 290	$ 42	$ 101	$ 151,789	98.4%	$ -	$ -
2007	$ 168,777	$ 160,990	95.4%	$ 4,023	$ 506	$ 74	$ 974	$ 166,567	98.7%	$ -	$ -
2008	$ 182,400	$ 174,208	95.5%	$ 6,157	$ 812	$ 125	$ 471	$ 181,773	99.7%	$ -	$ -
2009	$ 184,776	$ 176,080	95.3%	$ 5,985	$ 878	$ 157	$ 226	$ 183,326	99.2%	$ -	$ -
2010	$ 179,914	$ 158,509	88.1%	$ 3,683	$ 493	$ 110	$ 100	$ 162,895	90.5% (1)	$ -	$ -
2011	$ 178,812	$ 172,543	96.5%	$ 2,510	$ 246	$ 79	$ 58	$ 175,436	98.1%	$ -	$ -
2012	$ 179,564	$ 173,169	96.4%	$ 2,324	$ 262	$ 79	$ 46	$ 175,880	97.9%	$ 3,468	$ -
2013	$ 184,029	$ 178,299	96.9%	$ 1,674	$ 157	$ 30	$ 37	$ 180,197	97.9%	$ 6,248	$ 10,269
2014	$ 192,876	$ 187,828	97.4%	$ 1,371	$ 49	$ 32	$ 37	$ 189,317	98.2%	$ 6,958	$ 208
2015	$ 207,775	$ 202,356	97.4%	$ 1,336	$ 50	$ 32	$ 38	$ 203,812	98.1%	$ 8,110	$ 605
2016	$ 224,452	$ 216,219	96.3%	$ 1,368	$ 157	$ 38	$ 73	$ 217,855	97.1%	$ 9,180	$ 639

SOURCE: County of Orange, Auditor-Controller, Tax Ledger Detail by Fiscal Year
http://tax.ocgov.com/acledger/choice_eGov.asp

NOTES:

(1) Due to a Proposition 1A borrowing by the State, the property tax apportionment in Fiscal Year 2009/10 was reduced by $14,648,105. These funds were restored by a securitization mechanism and, had they been included in the tax ledger, collections would have been $177,543,386 (96.2% of levy collected within the fiscal year and 98.7% of levy collected to date).

(2) Upon dissolution of California redevelopment agencies during Fiscal Year 2011/12, property tax increment formerly remitted to OCFA by its member city redevelopment agencies was instead deposited into the newly formed Redevelopment Property Tax Trust Fund (RPTTF) from which the Auditor/Controller made disbursements on behalf of the successor agencies. There is no tax levy associated with these collections; thus, they have been excluded from the "% of levy collected" calculations.

ORANGE COUNTY FIRE AUTHORITY

Debt Capacity Information

Ratios of Outstanding Debt by Type – Presents information on the OCFA's total outstanding debt for each of the last ten fiscal years, including the ratio of outstanding debt to median family income and the calculation of outstanding debt per capita.

Ratios of General Bonded Debt Outstanding – Presents information on net bonded debt that will be repaid by general OCFA resources for each of the last ten fiscal years, including the ratio of outstanding debt to total assessed property value and the calculation of net bonded debt per capita.

The following schedules are not included in the OCFA's CAFR:

Computation of Legal Debt Margin –OCFA is not subject to a legal debt margin.

Pledged Revenue Coverage – Debt of the OCFA is not secured by a pledged revenue stream.

Computation of Direct and Overlapping Bonded Debt – OCFA is not obligated for any direct, bonded debt.

ORANGE COUNTY FIRE AUTHORITY
Ratios of Outstanding Debt by Type
Last Ten Fiscal Years
(dollars in thousands)

	Governmental Activities (A)			(B)		(C)		
Fiscal Year ended June 30	Revenue Bonds	Capital Lease Purchase Agreements	Total Outstanding Debt	County of Orange Median Household Income	Debt as a Percentage of Household Income	Population (OCFA Jurisdiction Only)	Debt per Capita	
2007	$ 13,570	$ 7,865	$ 21,435	$79	27132.9%	1,359	$16	
2008	$ 10,365	$ 6,203	$ 16,568	$84	19723.8%	1,376	$12	
2009	$ 7,040	$ 25,109	$ 32,149	$86	37382.6%	1,387	$23	
2010	$ -	$ 18,778	$ 18,778	$87	21583.9%	1,403	$13	
2011	$ -	$ 16,866	$ 16,866	$84	20078.6%	1,355	$12	
2012	$ -	$ 15,106	$ 15,106	$85	17771.8%	1,694	$9	(1)
2013	$ -	$ 12,943	$ 12,943	$84	15408.3%	1,712	$8	
2014	$ -	$ 10,724	$ 10,724	$85	12616.5%	1,734	$6	
2015	$ -	$ 8,447	$ 8,447	$86	9822.1%	1,755	$5	
2016	$ -	$ 6,110	$ 6,110	$85	7188.2%	1,784	$3	

SOURCES:

(A) Details regarding OCFA's outstanding debt can be found in the notes to the financial statements.

(B) U.S. Department of Housing and Urban Development, Median Family Income Documentation System by Fiscal Year (estimate) http://www.huduser.org/portal/datasets/il.html

(C) California Department of Finance, Population and Housing Estimates as of January 1 http://www.dof.ca.gov/forecasgin/demographics/estimates

NOTE:

(1) The population data presented in this schedule includes only the cities and unincorporated county areas served by the OCFA. Since the City of Santa Ana became a member of the OCFA in April 2012, its population data is not included with population totals prior to Fiscal Year 2011/12. The Fiscal Year 2011/12 population total includes 327,731 for the City of Santa Ana.

ORANGE COUNTY FIRE AUTHORITY
Ratios of General Bonded Debt Outstanding
Last Ten Fiscal Years
(amounts in thousands)

Fiscal Year ended June 30	(A) Population (OCFA Jurisdiction Only)	(B) Assessed Value	(C) Gross Bonded Debt	(D) Amounts Available in Debt Service Fund	Net Bonded Debt	Ratio of Net Bonded Debt to Assessed Value	Net Bonded Debt per Capita	
2007	1,359	$ 188,921,885	$ 13,570	$ 2,806	$ 10,764	0.01%	$ 8	
2008	1,376	$ 206,643,954	$ 10,365	$ 2,806	$ 7,559	0.00%	$ 5	
2009	1,387	$ 213,904,733	$ 7,040	$ 2,806	$ 4,234	0.00%	$ 3	
2010	1,403	$ 209,816,589	$ -	$ -	$ -	0.00%	$ -	(1)
2011	1,355	$ 208,586,179	$ -	$ -	$ -	0.00%	$ -	
2012	1,694	$ 230,163,686	$ -	$ -	$ -	0.00%	$ -	
2013	1,712	$ 233,485,818	$ -	$ -	$ -	0.00%	$ -	
2014	1,734	$ 241,149,669	$ -	$ -	$ -	0.00%	$ -	
2015	1,755	$ 257,873,050	$ -	$ -	$ -	0.00%	$ -	
2016	1,784	$ 274,668,222	$ -	$ -	$ -	0.00%	$ -	

SOURCES:

(A) California Department of Finance, Population and Housing Estimates as of January 1
http://www.dof.ca.gov/forecasting/demographics/estimates

(B) County of Orange, Auditor-Controller, Assessed Valuations by Fiscal Year
http://acweb1.ocgov.com/ac/txfdr_Civica/av/default_egov.asp

(C) Orange County Fire Authority, Finance Division, Accounting Section

(D) Minimum reserve requirement per bond documents

NOTE:

(1) OCFA's revenue bonds were repaid during Fiscal Year 2009/10.

Orange County Fire Authority Safety Message

Vegetation Safety
(Part 4 of 4)

(Continued from Page 128)

Vegetation management is controlling plant material to prevent wildfire spread. It requires a constant commitment to follow the "four R's" of vegetation management to reduce the threat of wildfire.

Resistant

- ✓ Use fire-resistant plants whenever possible.
- ✓ Keep in mind that even plants listed on the "Planting Guide" must be maintained using spacing guidelines for both vertical and horizontal separation. Plant separation is an important part of reducing wildfire threat.

ORANGE COUNTY FIRE AUTHORITY

Demographic and Economic Information

Demographic and Economic Indicators – Presents information regarding population, personal income, per capita income and the unemployment rate for the County of Orange for each of the last ten fiscal years.

Population and Housing Statistics – Presents information on population and housing units of each city and the unincorporated area within the OCFA's jurisdiction for the current fiscal year, as compared to nine fiscal years ago.

Principal Employers – Presents information about the ten largest employers within the OCFA's jurisdiction for the current fiscal year, as compared to nine fiscal years ago.

ORANGE COUNTY FIRE AUTHORITY
Demographic and Economic Indicators
Last Ten Fiscal Years
(amounts in thousands)

Calendar Year	(A) (Orange County)	(B) Total Personal Income	Per Capita Income	(C) Unemployment Rate
2007	3,078	$ 153,446,600	$ 49,853	4.8
2008	3,104	$ 155,068,400	$ 49,958	7.0
2009	3,135	$ 145,247,400	$ 46,331	10.9
2010	3,166	$ 147,195,100	$ 46,492	11.8
2011	3,030	$ 154,486,000	$ 50,985	11.4
2012	3,056	$ 164,971,000	$ 53,983	10.2
2013	3,082	$ 165,858,000	$ 53,815	9.0
2014	3,114	$ 173,306,000	$ 55,654	7.6
2015	3,147	$ 181,496,000	$ 57,673	6.2
2016	3,183	$ 188,384,000	$ 59,184	4.9

SOURCES:

(A) California Department of Finance
Population and Housing Estimates Table E-5, As of January 1
http://www.dof.ca.gov/forecasting/demographics/estimates

(B) Chapman University Economic & Business Review
Annual History and Forecasts
Years 2011-2015 updated as of June 30, 2016.
Most recent year is an estimate.

(C) Bureau of Labor Statistics (www.bls.gov/lau), Local Area Unemployment Statistics, Los Angeles-Long Beach-Anaheim, CA Metropolitan Statistical Area (The 2007-2015 figures reflect revised inputs, reestimation, and new statewide control. The 2016 figure is a six-month average for a partial year January - June.)

NOTE:

Data presented on this schedule is for the County of Orange and is not limited to the cities/county unincorporated areas served by the OCFA.

ORANGE COUNTY FIRE AUTHORITY
Population and Housing Statistics
Current Year and Nine Years Ago

	Population			Housing Units		
Jurisdiction	2007	2016	% Change	2007	2016	% Change
Aliso Viejo	44,830	50,509	12.7%	17,980	19,354	7.6%
Buena Park	81,775	83,347	1.9%	24,209	24,725	2.1%
Cypress	48,881	49,743	1.8%	16,540	16,194	-2.1%
Dana Point	36,639	33,415	-8.8%	15,940	16,016	0.5%
Irvine	199,400	258,386	29.6%	74,936	95,216	27.1%
Laguna Hills	33,117	30,681	-7.4%	11,153	10,996	-1.4%
Laguna Niguel	66,058	66,142	0.1%	24,831	25,458	2.5%
Laguna Woods	18,272	16,213	-11.3%	13,629	13,079	-4.0%
Lake Forest	77,603	83,910	8.1%	26,384	28,443	7.8%
La Palma	16,028	16,057	0.2%	5,131	5,234	2.0%
Los Alamitos	12,048	11,738	-2.6%	4,409	4,388	-0.5%
Mission Viejo	99,292	96,701	-2.6%	34,277	34,876	1.7%
Placentia	51,070	52,263	2.3%	16,436	17,155	4.4%
Rancho Santa Margarita	49,306	48,516	-1.6%	16,793	17,309	3.1%
San Clemente	66,833	66,245	-0.9%	26,955	26,143	-3.0%
San Juan Capistrano	36,153	36,085	-0.2%	11,780	12,262	4.1%
Santa Ana (A)	350,367	342,930	-2.1%	75,337	77,610	3.0%
Seal Beach	25,752	25,078	-2.6%	14,538	14,534	0.0%
Stanton	38,662	39,751	2.8%	11,087	11,355	2.4%
Tustin	71,931	82,717	15.0%	25,477	27,697	8.7%
Villa Park	6,202	5,948	-4.1%	2,021	2,024	0.1%
Westminster	92,104	94,073	2.1%	27,398	27,791	1.4%
Yorba Linda	67,192	67,637	0.7%	21,783	23,049	5.8%
Unincorporated	119,447	125,420	5.0%	38,887	40,583	4.4%
Total OCFA, adjusted (A)	1,708,962	1,783,505	4.4%	557,911	591,491	6.0%
Total non-OCFA	1,368,694	1,399,506	2.3%	467,391	484,214	3.6%
Total Orange County	3,077,656	3,183,011	3.4%	1,025,302	1,075,705	4.9%
Total OCFA, adjusted	1,708,962			557,911		
Less: Santa Ana	(350,367)			(75,337)		
Total OCFA, actual	1,358,595	1,783,505	31.3%	482,574	591,491	22.6%

SOURCE: California Department of Finance, Population and Housing Estimates Table E-5
As of January 1, 2007 and 2016 (http://www.dof.ca.gov/forecasting/demographics/estimates)

NOTE:

(A) Before Santa Ana became on OCFA member city in April 2012, the city's data was included in the "non-OCFA" total. However, Santa Ana's 2007 data has been identified separately for comparison purposes.

ORANGE COUNTY FIRE AUTHORITY
Principal Employers
Current and Nine Years Ago

	Fiscal Year 2006/07			Fiscal Year 2015/16		
Employer	Number of Employees	Rank	Percent of Total Employment	Number of Employees	Rank	Percent of Total Employment
Walt Disney Co.	21,000	1	1.37%	27,000	1	1.69%
University of California, Irvine	16,229	3	1.06%	22,385	2	1.40%
County of Orange	17,785	2	1.16%	18,135	3	1.13%
St. Joseph Health System	9,385	5	0.61%	12,227	4	0.76%
Kaiser Permanente				7,000	5	0.44%
Boeing Co.	12,042	4	0.79%	6,890	6	0.43%
Walmart				6,000	7	0.38%
Memorial Care Health System				5,650	8	0.35%
Bank of America				5,500	9	0.34%
Target Corporation				5,400	10	0.34%
Yum! Brands Inc.	6,600	6	0.43%			
Ameriquest Capital Corporation	6,300	7	0.41%			
California State University, Fullerton	5,256	8	0.34%			
PacifiCare Health System	5,074	9	0.33%			
Home Depot, Incorporated	5,000	10	0.33%			

SOURCE:
County of Orange Comprehensive Annual Financial Report for Fiscal Year 2014/15
For years ended June 30, 2015 and 2006
Amounts are reported one year in arrears due to availability of data at time of publication of this document.
http://acdcweb01.ocgov.com/acInternet/Reports/CAFRReports.aspx

NOTE:
Data presented on this schedule is for the County of Orange and is not limited to the cities/county unincorporated areas served by the OCFA.

ORANGE COUNTY FIRE AUTHORITY

Operating Information

Authorized Positions by Function/Fund/Department – Presents the number of funded and authorized positions by function/fund/department for each of the last ten fiscal years.

Authorized Positions by Unit – Presents the number of authorized positions by unit for each of the last ten fiscal years.

Frozen Positions by Department – Presents the number of frozen positions by department as of June 30 for each of the last ten fiscal years.

Jurisdiction Information – Presents information on the OCFA's member agencies, square mile area served, population served, and number of fire stations for each of the last ten fiscal years.

Incidents by Type – Presents the number of OCFA major incidents by category for each of the last ten fiscal years.

Incidents by Member Agency – Presents the number of OCFA major incidents by member agency for each of the last ten fiscal years.

Incidents by Major Category Definitions – Provides OCFA's definitions for categories of major incidents.

Capital Equipment by Category – Presents the historical cost and quantity of capital equipment by category for each of the last nine fiscal years.

Capital Vehicles by Category – Presents the historical cost and quantity of capital vehicles by category for each of the last nine fiscal years.

Map of Division/Battalion Boundaries and Station Locations – This Orange county map identifies the areas included within OCFA's jurisdiction, the boundaries of its divisions/battalions, and the locations of all OCFA fire stations.

List of Stations by Member Agency – Presents a list of OCFA fire stations and street addresses by member agency.

Description of the Organization, Programs and Service Delivery – Provides an overview of the activities and responsibilities carried out by each of the OCFA's five departments.

ORANGE COUNTY FIRE AUTHORITY
Authorized Positions by Function/Fund/Department
Last Ten Fiscal Years

Public Safety	As of June 30									
Fund/Department	2007	2008	2009	2010	2011	2012	2013	2014	2015	2016
Funded positions:										
Executive Management	44	45	45	45	35	33	33	40	36 **(E,F)**	37
Operations	877	892	902	878	881	1,001 **(B)**	994	968 **(D)**	966 **(F)**	984
Community Risk Reduction	74	76	72	65	67	76	76	96 **(D)**	98	98
Business Services	77	77	77	73	48 **(A)**	47	47	48	53 **(E)**	53
Support Services	35	35	35	34	55 **(A)**	88 **(B)**	88	88	86 **(F)**	97
Organizational Planning	-	-	-	-	-	-	-	-	5 **(F)**	5
General Operating Fund	1,107	1,125	1,131	1,095	1,086	1,245	1,238	1,240	1,244	1,274
Facilities Replacement	1	1	1	1	-	-	-	-	-	-
RFOTC	-	-	-	-	-	-	-	-	-	-
Structural Fire Entitlement	2	-	-	-	-	-	-	-	-	-
Total funded positions	**1,110**	**1,126**	**1,132**	**1,096**	**1,086**	**1,245** **(C)**	**1,238**	**1,240**	**1,244**	**1,274**
Unfunded positions:										
Limited term and/or grant-funded positions	-	-	-	-	-	1	3	3	3	3
Frozen positions	1	1	50	86	95	93	102	100	97	86
Total unfunded positions	**1**	**1**	**50**	**86**	**95**	**94**	**105**	**103**	**100**	**89**
Total authorized positions	**1,111**	**1,127**	**1,182**	**1,182**	**1,181**	**1,339**	**1,343**	**1,343**	**1,344**	**1,363**

SOURCE: Orange County Fire Authority, Treasury & Financial Planning Division, Budget Section

NOTE:

(A) During Fiscal Year 2010/11, Information Technology (23 positions) was transferred from Business Services to Support Services.

(B) During Fiscal Year 2011/12, the Emergency Command Center (32 positions) was transferred from Operations to Support Services.

(C) The net increase of 159 total funded employees during Fiscal Year 2011/12 included 163 authorized/funded positions for employees transitioning from the City of Santa Ana (151 Operations; 9 Community Risk Reduction; 3 Support Services).

(D) During Fiscal Year 2013/14, Crews & Equipment (26 positions) was transferred form Operations to Community Risk Reduction.

(E) During Fiscal Year 2014/15, the Clerk of the Authority (5 positions) was transferred form Executive Management to Business Services.

(F) During Fiscal Year 2014/15, the Organizational Planning Department was created by transferring positions from Executive Management (Human Resources - 1 position); Operations (Emergency Planning and Coordination - 1 position); and Support Services (Strategic Services - 3 positions).

ORANGE COUNTY FIRE AUTHORITY
Authorized Positions by Unit
Last Ten Fiscal Years

	As of June 30										
Unit	2006	2007	2008	2009	2010	2011	2012	2013	2014	2015	2016
Firefighter	778	792	808	863	863	863	1,010	1,011	1,011	1,011	1,023
Fire Management	40	41	41	41	41	41	45	45	45	45	45
General	192	198	197	197	197	196	203	205	205	205	213
Supervisory Management	27	27	28	28	28	28	28	28	27	27	27
Supported Employment	4	4	4	4	4	4	4	4	4	4	4
Administrative Management	43	42	42	42	42	42	42	43	44	44	43
Executive Management	7	7	7	7	7	7	7	7	7	8	8
Total authorized positions	1,091	1,111	1,127	1,182	1,182	1,181	1,339	1,343	1,343	1,344	1,363
Increase (decrease) from prior fiscal year	1	20	16	55	-	(1)	158	4	-	1	19
							(A)				

SOURCE: OCFA Treasury & Financial Planning Division, Budget Section

(A) The net increase of total authorized positions during Fiscal Year 2011/12 included 163 authorized positions for employees transitioning from the City of Santa Ana (147 Firefighter Unit, 4 Fire Management Unit, 11 General Unit, and 1 Supervisory Management Unit).

ORANGE COUNTY FIRE AUTHORITY
Frozen Positions by Department
Last Ten Fiscal Years

	As of June 30									
Department	2007	2008	2009	2010	2011	2012	2013	2014	2015	2016
Suppression:										
Operations:										
Firefighter	-	-	15	15	18	18	18	18	18	18
Fire Apparatus Engineer	-	-	3	13	18	18	24	24	24	21
Fire Captain	-	-	3	16	24	24	27	27	27	24
Battalion Chief (Staff)	-	-	-	2	2	2	2	2	2	2
Fire Pilot	-	-	-	-	-	-	-	1	1	1
Hand Crew Firefighter	-	-	22	22	-	-	-	-	-	-
Heavy Fire Equipment Operator	-	-	-	-	1	1	1	1	1	1
Subtotal Suppression	**-**	**-**	**43**	**68**	**63**	**63**	**72**	**73**	**73**	**67**
Non-Suppression:										
Executive Management:										
Executive Management	-	-	-	-	1	-	-	-	-	-
Human Resources	-	-	-	-	4	4	4	4	3	2
Corporate Communications/CAPA	-	-	-	-	1	-	-	-	-	-
Subtotal Executive Management	-	-	-	-	6	4	4	4	3	2
Operations	-	-	-	-	-	1	2	1	1	1
Community Risk Reduction	1	1	6	12	16	15	15	14	12	9
Business Services	-	-	1	5	6	6	5	4	4	4
Support Services	-	-	-	1	4	4	4	4	4	3
Organizational Planning	-	-	-	-	-	-	-	-	-	-
Subtotal Non-Suppression	**1**	**1**	**7**	**18**	**32**	**30**	**30**	**27**	**24**	**19**
Total frozen positions	**1**	**1**	**50**	**86**	**95**	**93**	**102**	**100**	**97**	**86**

SOURCE: Orange County Fire Authority, Treasury & Financial Planning Division, Budget Section

ORANGE COUNTY FIRE AUTHORITY
Jurisdiction Information
Last Ten Fiscal Years

Fiscal Year Ended June 30	(A) Number of Member Agencies	(B) Square Mile Area Served	(C) Population Served	(A) Number of Stations	New and Closed Station(s) +/-	Description
2007	23	551	1,358,595	60	(1)	Closed Station 52 (Crews & Equipment)
2008	23	550	1,375,509	61	1	New Station 27 (Irvine/Portola Springs)
2009	23	550	1,387,171	62	1	New Station 20 (Irvine/Great Park)
2010	23	550	1,403,072	62	-	
2011	23	548	1,355,090	61	(1)	Closed Station 3 (County/Sunset Beach)
2012	24	576	1,694,010	71	10	New Stations 70 through 79 (Santa Ana)
2013	24	571	1,712,234	71	-	
2014	24	571	1,733,563	71	-	
2015	24	571	1,755,436	71	-	
2016	24	576	1,783,505	72	1	New Station 56 (County/Rancho Mission Viejo)

SOURCES:

(A) Orange County Fire Authority, Clerk of the Authority

(B) Orange County Fire Authority, Geographic Information Systems

(C) California Department of Finance, Population and Housing Estimates as of January 1
http://www.dof.ca.gov/forecasting/demographics/estimates

NOTE: The City of Santa Ana became an OCFA member city in Fiscal Year 2011/12.

ORANGE COUNTY FIRE AUTHORITY
Incidents by Type
Last Ten Fiscal Years

Fiscal Year ended June 30 (1)	Fire/ Explosion	Ruptures	Rescue/ EMS	Hazmat	Service Call	Good Intent	False Alarm	Natural Disaster	Other	Total	
2007	2,155	179	55,863	1,465	5,475	10,636	4,734	5	209	80,721	
2008	1,946	178	57,871	1,353	5,257	10,933	4,835	10	547	82,930	
2009	1,795	169	58,358	1,080	5,508	10,839	4,503	3	294	82,549	
2010	1,464	164	59,408	1,049	5,703	10,979	4,300	25	349	83,441	
2011	1,541	158	61,870	1,011	6,157	12,897	4,293	51	249	88,227	(2)
2012	1,635	157	66,383	965	6,457	12,802	4,065	4	192	92,660	(3)
2013	2,004	219	80,167	1,100	7,753	14,786	5,710	1	149	111,889	(3)
2014	1,936	220	83,762	1,254	6,978	12,411	6,238	6	220	113,025	
2015	1,898	229	94,740	1,220	6,996	12,046	6,515	5	345	123,994	
2016	2,338	197	102,994	1,314	7,921	13,261	6,575	6	9	134,615	

SOURCE:
Orange County Fire Authority, Organizational Planning Department, Strategic Services

NOTES:
(1) Response statistics are normally reported on a calendar year basis in other reports. These statistics have been reported on the fiscal year basis, July through June.

(2) Beginning in Fiscal Year 2010/11, totals were revised to include incidents outside of OCFA jurisdiction that involved OCFA units and personnel (Auto/Mutual Aid Given).

(3) The City of Santa Ana joined the OCFA effective April 20, 2012. Fiscal Year 2011/12 data includes the portion of the fiscal year during which the city was a member of OCFA. Fiscal Year 2012/13 data includes the first full year of Santa Ana activity.

ORANGE COUNTY FIRE AUTHORITY
Incidents by Member Agency
Last Ten Fiscal Years

	Fiscal Year ended June 30 (1)									
Member Agency	2007	2008	2009	2010	2011	2012	2013	2014	2015	2016
Aliso Viejo	1,939	2,060	1,998	2,005	2,094	2,071	2,226	2,194	2,420	2,511
Buena Park	5,431	5,528	5,668	5,676	5,652	5,836	5,849	6,057	6,569	7,016
Cypress	2,518	2,552	2,504	2,600	2,490	2,556	2,699	2,633	2,833	3,013
Dana Point	2,660	2,700	2,650	2,787	2,870	2,772	2,950	2,925	3,297	3,291
Irvine	11,216	11,632	11,385	11,981	12,214	11,969	12,485	12,896	13,875	14,688
La Palma	798	760	760	754	778	750	808	925	1,036	1,059
Laguna Hills	2,494	2,434	2,421	2,558	2,614	2,542	2,579	2,584	2,675	2,887
Laguna Niguel	3,017	3,101	3,079	3,094	3,255	3,358	3,476	3,685	3,584	3,861
Laguna Woods	4,275	4,349	4,350	4,399	4,560	4,717	4,748	4,306	4,847	5,319
Lake Forest	4,289	4,170	4,272	4,320	4,334	4,230	4,459	4,297	4,651	4,995
Los Alamitos	1,033	1,032	1,083	1,080	1,055	1,101	1,199	1,123	1,254	1,380
Mission Viejo	5,794	6,139	6,424	6,363	6,379	6,355	6,760	6,791	7,072	7,508
Placentia	2,678	2,829	2,699	2,696	2,837	2,714	2,846	2,806	2,981	3,132
Rancho Santa Margarita	1,879	2,002	1,965	2,009	2,015	2,105	1,983	2,111	2,254	2,415
San Clemente	3,684	3,863	3,678	3,961	3,813	3,999	4,187	4,334	4,668	5,080
San Juan Capistrano	2,554	2,569	2,526	2,429	2,580	2,617	2,701	2,934	3,164	3,629
Santa Ana (3)	n/a	n/a	n/a	n/a	n/a	3,654	18,915	19,303	21,465	23,455
Seal Beach	3,283	3,453	3,388	3,503	3,375	3,617	3,571	3,343	3,783	4,882
Stanton	2,343	2,438	2,420	2,401	2,597	2,660	2,878	2,879	3,113	3,413
Tustin	3,845	3,865	3,761	3,744	4,055	4,196	4,582	4,614	5,205	5,406
Villa Park	319	324	329	336	388	363	392	338	378	452
Westminster	5,684	5,795	5,835	5,724	5,882	6,012	6,486	6,201	6,880	7,442
Yorba Linda	2,991	3,100	3,134	2,937	2,928	3,125	3,277	3,185	3,547	3,716
Unincorporated	5,997	6,235	6,220	6,084	6,087	5,991	6,312	6,073	6,496	6,719
	80,721	82,930	82,549	83,441	84,852	89,310	108,368	108,537	118,047	127,269
Auto/Mutual Aid Given (2)	n/a	n/a	n/a	n/a	3,375	3,350	3,521	4,488	5,947	7,346
Total	80,721	82,930	82,549	83,441	88,227	92,660	111,889	113,025	123,994	134,615

SOURCE: Orange County Fire Authority, Organizational Planning Department, Strategic Services

NOTES:

(1) Response statistics are normally reported on a calendar year basis in other reports. These statistics have been reported on the fiscal year basis, July through June.

(2) Beginning in Fiscal Year 2010/11, methodology was revised to include incidents outside of OCFA jurisdiction that involved OCFA units and personnel (Auto/Mutual Aid Given).

(3) The City of Santa Ana joined the OCFA effective April 20, 2012. Fiscal Year 2011/12 data is reported only for the portion of the fiscal year during which the city was a member of OCFA. Fiscal Year 2012/13 data includes the first full year of Santa Ana activity.

ORANGE COUNTY FIRE AUTHORITY
Incidents by Major Category Definitions

Fire, Explosion: This category includes fire responses, even if the fire has been extinguished upon arrival. This category also includes combustion explosions with no resulting fire. Examples of this category include structure fires, rubbish fires, dumpster fires and vehicle fires.

Over-Pressure Rupture: This category includes vessels or containers that suffer failure or near failure due to extreme pressure from either an outside source, such as direct heating, or internally due to a cooling system failure or over-filling, such as a propane tank. Examples of this category also include explosions from bombs, dynamite or similar explosives.

Rescue/EMS Call: This category includes all medical aids, illness and heart attacks, as well as traffic accidents and missing persons.

Hazardous Condition Standby: This category includes Hazardous Materials incidents; electrical wire arcing; suspected drug labs; or situations where there is a perceived problem that may prove to be a potential emergency.

Service Call: This category includes incidents for persons in distress, such as a lock-in or lock-out of a vehicle or dwelling creating an emergency situation or critical need, and smoke or odor problems. This category would also include moving units from one station to another to provide area coverage.

Good Intent Call: This category includes incidents that are cleared prior to arrival, such as a medical aid where the injured party has left the scene, or the initial information indicated that there were injuries and upon arrival no persons were injured. This category may also include calls where the informant has mistaken steam for smoke.

False Alarm: Some examples of the incidents in this category are malicious mischief calls, system malfunctions and the accidental tripping of an interior alarm sensor or device.

Natural Disaster: This category includes incidents that are not normal occurrences, such as earthquakes, lightning strikes, hurricanes and other weather or natural events.

Other: This includes citizen complaints and reports of fire code or ordinance violations.

SOURCE: Orange County Fire Authority, Organizational Planning Department, Strategic Services

Orange County Fire Authority Safety Message

Barbeque Safety
(Part 1 of 2)

There's nothing like an outdoor barbeque. But a barbeque too close to anything that can burn is a fire hazard. Follow these simple steps and stay safe this grilling season.

Grilling Safety

- ✓ Propane and charcoal BBQ grills should only be used outdoors.
- ✓ The grill should be placed well away from the home, deck railings, tables, overhanging branches, and where people gather.
- ✓ Keep children and pets at least three feet away from the grill area.
- ✓ Keep your grill clean by removing grease or fat buildup from the grills and in trays below the grill.
- ✓ Never leave a heated grill, lighter, or matches unattended.

(Continued on Page 160)

ORANGE COUNTY FIRE AUTHORITY
Capital Equipment by Category
Last Nine Fiscal Years

Category	June 30, 2008 Historical Cost	June 30, 2008 Quantity	June 30, 2009 Historical Cost	June 30, 2009 Quantity
Air fill station	$ 53,179	2	$ 53,179	2
Aboveground storage tank	678,014	8	678,014	8
Audio visual equipment	784,559	25	784,559	25
Boat	36,504	4	36,504	4
Camera, thermal imaging	1,205,722	89	1,205,722	89
Camera, other	47,387	4	47,387	4
Communications equipment	1,456,590	37	1,465,264	38
Computer	85,459	5	91,328	6
Defibrillator	1,324,920	74	1,341,790	75
Exercise equipment	34,177	5	44,260	6
Fleet equipment	162,771	16	162,771	16
Forklift	102,994	3	102,994	3
Generator	564,051	25	553,049	24
GPS equipment (AVL regional interoperability projects)	1,391,000	2	1,391,000	2
Hazmat equipment	248,782	20	248,782	20
Helicopters and improvements:				
Helicopter	7,294,218	2	28,854,977	4
Helicopter, rotor blades	-	-	151,573	2
Helicopter, fast fin kits	-	-	-	-
Helicopter equipment	421,615	16	670,576	37
Hydraulic tool	97,746	18	97,746	18
Kitchen equipment	33,403	4	33,403	4
Laptop	53,782	9	53,782	9
Manikin	73,144	12	73,144	12
Miscellaneous equipment	385,042	27	447,889	29
Mobile radio project (FY 2003/04 - FY 2004/05)	2,424,594	1	2,424,594	1
Mobile radio	110,199	17	116,008	18
Network equipment	976,386	29	976,386	29
Office equipment	500,659	7	635,138	8
Portable building	179,863	9	219,564	12
Portable radio	-	-	25,640	5
Printer	99,499	9	99,499	9
Projector	34,565	5	34,565	5
Router	25,980	2	37,405	4
Scanner	-	-	-	-
Search equipment	192,378	13	192,377	13
Server	1,224,377	72	1,090,643	80
Software	6,636,035	47	6,709,908	52
Switch	232,515	11	232,515	11
Tablet	-	-	-	-
Tent	122,237	12	122,237	12
Trailer	419,725	16	433,283	17
Workstation	1,634,122	24	1,641,243	25
	$ 31,348,193	681	$ 53,580,698	738

NOTE: Previous CAFR's presented quantities of select front-line equipment. Beginning in FY 2010/11, historical cost and quantities of all capital equipment are presented. Data is available in this format beginning in Fiscal Year 2007/08.

June 30, 2010		June 30, 2011		June 30, 2012	
Historical Cost	Quantity	Historical Cost	Quantity	Historical Cost	Quantity
$ 53,179	2	$ 53,179	2	$ 53,179	2
678,014	8	678,014	8	678,014	8
768,132	23	754,726	23	716,800	18
23,412	2	23,412	2	31,515	4
1,205,722	89	1,223,802	91	1,251,757	104
41,577	3	41,577	3	11,171	1
1,465,264	38	1,488,213	41	1,512,740	42
82,126	5	82,126	5	82,126	5
1,149,858	90	1,149,858	90	1,528,398	105
35,622	5	35,622	5	35,622	5
162,771	16	170,441	16	172,042	16
102,994	3	88,098	2	93,177	3
553,049	24	510,078	23	504,562	22
1,391,000	2	1,391,000	2	1,391,000	2
248,782	20	248,782	20	337,453	24
28,854,977	4	28,854,977	4	28,854,977	4
319,149	4	319,149	4	319,149	4
-	-	-	-	-	-
747,865	40	770,085	42	778,885	42
97,746	18	195,119	31	368,216	55
33,403	4	33,403	4	33,403	4
62,732	10	56,632	9	44,108	7
73,144	12	67,452	11	67,452	11
495,934	31	559,561	35	597,167	40
2,424,594	1	2,424,594	1	2,424,594	1
116,008	18	116,008	18	107,671	17
967,465	28	967,465	28	804,981	27
648,440	8	648,440	8	648,440	8
226,348	13	226,348	13	226,348	13
25,640	5	25,640	5	25,640	5
77,218	7	77,218	7	72,039	7
25,838	4	25,838	4	10,372	2
37,405	4	37,405	4	37,405	4
-	-	-	-	-	-
211,366	15	204,105	14	163,944	11
1,148,057	88	1,049,533	82	1,027,950	81
7,068,488	55	7,068,488	55	7,074,050	55
264,893	14	282,393	16	282,393	16
-	-	-	-	-	-
122,237	12	122,237	12	122,237	12
423,376	16	423,376	16	437,742	16
1,641,243	25	1,641,243	25	1,641,243	25
$ 54,075,068	766	$ 54,135,637	781	$ 54,569,962	828

SOURCE: Orange County Fire Authority, Finance Division, Accounting Section

(Continued on next page)

ORANGE COUNTY FIRE AUTHORITY
Capital Equipment by Category
(Continued)

Category	June 30, 2013 Historical Cost	June 30, 2013 Quantity	June 30, 2014 Historical Cost	June 30, 2014 Quantity
Air fill station	$ 53,179	2	53,179	2
Aboveground storage tank	678,014	8	678,014	8
Audio visual equipment	716,800	18	716,800	18
Boat	31,515	4	31,515	4
Camera, thermal imaging	1,117,422	97	1,214,725	113
Camera, other	11,171	1	11,171	1
Communications equipment	1,533,009	44	1,458,744	39
Computer	82,126	5	82,126	5
Defibrillator	1,528,398	105	1,526,069	105
Exercise equipment	35,622	5	35,622	5
Fleet equipment	172,042	16	172,042	16
Forklift	93,177	3	93,177	3
Generator	504,562	22	504,562	22
GPS equipment (AVL regional interoperability projects)	1,391,000	2	1,391,000	2
Hazmat equipment	336,275	23	432,282	23
Helicopters and improvements:				
Helicopter	28,854,977	4	28,854,977	4
Helicopter, rotor blades	319,149	4	319,149	4
Helicopter, fast fin kits	-	-	148,104	2
Helicopter equipment	787,062	43	780,245	42
Hydraulic tool	377,287	56	401,133	60
Kitchen equipment	33,403	4	33,403	4
Laptop	29,058	5	29,058	5
Manikin	67,452	11	67,452	11
Miscellaneous equipment	643,040	46	660,496	49
Mobile radio project (FY 2003/04 - FY 2004/05)	2,424,594	1	2,424,594	1
Mobile radio	107,671	17	107,671	17
Network equipment	952,374	30	1,321,172	31
Office equipment	638,472	7	632,865	6
Portable building	236,843	14	274,656	14
Portable radio	79,452	15	79,452	15
Printer	72,039	6	72,039	6
Projector	10,372	2	10,372	2
Router	37,405	4	37,405	4
Scanner	-	-	-	-
Search equipment	163,944	11	196,302	13
Server	1,022,818	81	997,288	79
Software	7,117,506	56	7,117,506	56
Switch	282,393	16	312,760	17
Tablet	-	-	-	-
Tent	122,237	12	122,237	12
Trailer	527,629	18	512,761	18
Workstation	1,641,243	25	1,641,243	25
	$ 54,832,732	843	$ 55,555,368	863

June 30, 2015		June 30, 2016	
Historical Cost	Quantity	Historical Cost	Quantity
$ 53,179	2	53,179	2
678,014	8	678,014	8
734,581	20	734,581	20
31,515	4	31,515	4
1,167,318	107	1,115,772	102
33,713	4	44,264	5
1,458,744	39	1,458,744	39
90,386	6	90,386	6
1,526,069	105	1,526,069	105
35,622	5	35,622	5
189,888	17	252,867	24
93,177	3	93,177	3
504,562	22	504,562	22
1,391,000	2	1,391,000	2
479,786	26	479,786	26
28,854,977	4	28,854,977	4
319,149	4	319,149	4
148,104	2	148,104	2
942,245	43	942,245	43
468,400	67	490,913	69
33,403	4	33,403	4
29,058	5	23,832	4
67,452	11	67,452	11
702,500	52	735,503	55
2,424,594	1	2,424,594	1
82,659	14	153,768	28
1,288,223	29	1,294,452	30
632,865	6	632,865	6
352,872	17	352,872	17
143,605	27	138,477	26
72,039	6	72,039	6
10,372	2	10,372	2
37,405	4	72,745	8
5,489	1	5,489	1
210,657	14	236,657	16
1,000,858	69	1,211,242	72
9,176,979	50	10,502,153	53
312,760	17	349,909	20
5,455	1	24,882	4
122,237	12	122,237	12
523,455	18	523,455	18
1,641,243	25	1,641,243	25
$ 58,076,609	875	$ 59,874,567	914

ORANGE COUNTY FIRE AUTHORITY
Capital Vehicles by Category
Last Nine Fiscal Years

	June 30, 2008		June 30, 2009	
Category	Historical Cost	Quantity	Historical Cost	Quantity
Air Utility	$ 629,011	3	$ 629,011	3
Ambulance	464,082	5	464,082	5
Battalion Chief Vehicle	1,203,251	25	1,300,458	26
Brush Chipper	34,289	2	34,289	2
Crew Cab	176,403	4	176,403	4
Crew-Carrying Vehicle	297,336	4	297,336	4
Dump Truck	66,366	1	66,366	1
Fire Command	402,755	2	402,755	2
Fire Dozer	445,205	4	723,403	4
Foam Tender	152,245	1	152,245	1
Fuel Tender	226,392	2	226,392	2
Hazmat Unit	674,962	2	674,962	2
Heavy Rescue Unit	-	-	649,343	1
Hose Tender	103,189	1	103,189	1
Lift Truck	-	-	-	-
Loader	-	-	-	-
Paramedic Van	1,449,569	22	1,449,569	22
Parade Engine	35,000	2	35,000	2
Patrol	1,539,901	19	1,539,901	19
Patrol, Compressed Air Foam System (CAFS)	-	-	488,603	7
Pickup Truck	1,352,388	42	1,562,434	41
Road Grader	102,396	1	102,396	1
Sedan	123,991	7	123,991	7
Squad	578,998	7	578,998	7
Stakeside	34,289	1	34,289	1
Sport Utility Vehicle (SUV)	2,849,285	104	2,809,830	103
Telesquirt	2,617,035	8	2,617,035	8
Transport Tractor	399,409	5	506,673	5
Truck, 90', 100' and 110' Tractor Drawn Aerials	1,737,166	3	4,428,314	5
Truck, 75' Quint	2,717,185	6	2,717,185	6
Truck, 90' Quint	4,827,476	10	4,429,851	9
Truck, 100' Quint	-	-	-	-
Truck, Other	427,613	5	427,613	5
Truck, Compressed Air Foam System (CAFS)	-	-	-	-
Type 1 Engine	22,538,064	87	21,865,361	82
Type 1 Wildland Urban Interface Engine	-	-	-	-
Type 2 Engine	1,862,087	13	1,752,417	12
Type 3 Engine	914,455	8	4,673,626	18
Utility	176,422	5	176,422	5
Van	681,041	29	648,591	27
Water Tender	753,535	5	753,535	5
	$ 52,592,791	445	$ 59,621,868	455

NOTE: Previous CAFR's presented quantities of select front-line vehicles. Beginning in FY 2010/11, historical cost and quantities of all capital vehicles are presented. Data is available in this format beginning in Fiscal Year 2007/08. More years will be added as they become available.

June 30, 2010		June 30, 2011		June 30, 2012	
Historical Cost	Quantity	Historical Cost	Quantity	Historical Cost	Quantity
$ 629,011	3	$ 629,011	3	$ 820,733	4
935,731	8	776,283	6	776,283	6
1,300,458	26	1,488,518	28	1,518,914	29
34,289	2	34,289	2	34,289	2
139,057	3	139,057	3	69,009	2
297,336	4	297,336	4	452,373	4
66,366	1	66,366	1	66,366	1
402,755	2	402,755	2	402,755	2
723,403	4	723,403	4	723,403	4
152,245	1	152,245	1	152,245	1
226,392	2	226,392	2	376,164	3
674,962	2	674,962	2	1,077,646	3
658,107	1	658,107	1	658,107	1
103,189	1	103,189	1	103,189	1
71,780	1	71,780	1	71,780	1
-	-	-	-	-	-
1,393,496	21	1,860,604	22	1,860,604	22
35,000	2	35,000	2	-	-
1,539,901	19	1,539,901	19	1,539,901	19
858,456	12	858,456	12	858,456	12
1,590,978	41	1,590,978	41	1,796,208	49
102,396	1	102,396	1	102,396	1
83,753	4	61,256	3	61,256	3
578,998	7	578,998	7	578,998	7
34,289	1	34,289	1	34,289	1
2,866,442	107	2,820,880	104	2,658,508	98
2,358,138	7	2,099,242	6	2,344,077	7
506,673	5	506,673	5	506,673	5
4,428,314	5	4,428,314	5	4,943,110	8
2,717,185	6	3,536,736	7	3,124,257	6
4,429,851	9	4,429,851	9	3,562,035	7
-	-	-	-	2,354,146	2
427,613	5	427,613	5	427,538	5
-	-	-	-	21,649	1
26,065,677	91	25,031,630	84	26,638,285	90
1,702,359	4	2,127,949	5	2,127,949	5
1,020,651	7	305,219	2	152,610	1
4,105,746	13	4,105,746	13	4,105,746	13
161,801	4	161,801	4	145,169	3
639,778	25	623,608	24	623,608	24
753,535	5	753,535	5	753,535	5
$ 64,816,111	462	$ 64,464,368	447	$ 68,624,259	458

SOURCE: Orange County Fire Authority, Finance Division, General Accounting Unit

(Continued on next page)

ORANGE COUNTY FIRE AUTHORITY
Capital Vehicles by Category
(Continued)

Category	June 30, 2013 Historical Cost	June 30, 2013 Quantity	June 30, 2014 Historical Cost	June 30, 2014 Quantity
Air Utility	$ 820,733	4	$ 820,733	4
Ambulance	776,283	6	674,739	5
Battalion Chief Vehicle	1,518,914	29	1,518,914	29
Brush Chipper	34,289	2	34,289	2
Crew Cab	69,009	2	-	-
Crew-Carrying Vehicle	452,373	4	452,373	4
Dump Truck	66,366	1	66,366	1
Fire Command	402,755	2	820,829	4
Fire Dozer	723,403	4	723,403	4
Foam Tender	152,245	1	152,245	1
Fuel Tender	376,164	3	376,164	3
Hazmat Unit	1,077,646	3	1,077,646	3
Heavy Rescue Unit	658,107	1	658,107	1
Hose Tender	103,189	1	103,189	1
Lift Truck	71,780	1	71,780	1
Loader	-	-	-	-
Paramedic Van	1,860,604	22	1,860,604	22
Parade Engine	-	-	-	-
Patrol	1,539,901	19	1,539,901	19
Patrol, Compressed Air Foam System (CAFS)	858,456	12	858,456	12
Pickup Truck	1,943,905	51	2,081,006	53
Road Grader	102,396	1	102,396	1
Sedan	61,256	3	44,994	2
Squad	578,998	7	578,998	7
Stakeside	34,289	1	34,289	1
Sport Utility Vehicle (SUV)	2,637,875	97	2,560,913	94
Telesquirt	1,995,305	6	1,736,407	5
Transport Tractor	506,673	5	506,673	5
Truck, 90', 100' and 110' Tractor Drawn Aerials	4,938,110	7	4,938,110	7
Truck, 75' Quint	3,124,257	6	3,124,257	6
Truck, 90' Quint	3,562,035	7	3,562,035	7
Truck, 100' Quint	2,354,146	2	2,354,146	2
Truck, Other	427,538	5	592,188	7
Truck, Compressed Air Foam System (CAFS)	44,058	2	44,058	2
Type 1 Engine	26,638,285	90	28,363,285	92
Type 1 Wildland Urban Interface Engine	3,451,627	8	3,451,627	8
Type 2 Engine	152,610	1	152,610	1
Type 3 Engine	3,871,874	11	4,653,221	13
Utility	145,169	3	145,169	3
Van	623,608	24	623,608	24
Water Tender	753,535	5	753,535	5
	$ 69,509,766	459	$ 72,213,263	461

June 30, 2015		June 30, 2016	
Historical Cost	Quantity	Historical Cost	Quantity
$ 820,733	4	820,733	4
573,194	4	573,194	4
1,518,914	29	2,098,087	42
34,289	2	103,545	3
-	-	-	-
452,373	4	452,373	4
66,366	1	66,366	1
674,655	3	674,655	3
550,978	2	550,978	2
152,245	1	152,245	1
376,164	3	376,164	3
1,077,646	3	1,077,646	3
658,107	1	679,608	1
103,189	1	103,189	1
71,780	1	71,780	1
81,996	1	81,996	1
1,860,604	22	1,860,604	22
-	-	-	-
1,539,901	19	1,539,901	19
858,456	12	858,456	12
2,081,006	53	2,327,501	63
102,396	1	102,396	1
44,994	2	-	-
578,998	7	578,998	7
34,289	1	34,289	1
2,505,906	92	2,621,995	93
1,736,407	5	1,736,407	5
506,673	5	506,673	5
4,938,110	7	4,948,930	8
3,124,257	6	3,124,257	6
3,062,553	6	3,062,553	6
2,354,146	2	2,354,146	2
768,076	11	768,076	11
44,058	2	44,058	2
28,442,065	90	30,580,415	94
3,451,627	8	3,451,627	8
152,610	1	152,610	1
4,653,221	13	4,653,221	13
145,169	3	145,169	3
451,395	19	451,395	19
753,535	5	753,535	5
$ 71,403,081	452	$ 74,539,771	480

Orange County Fire Authority Safety Message

Barbeque Safety
(Part 2 of 2)

(Continued from Page 151)

There's nothing like an outdoor barbeque. But a barbeque too close to anything that can burn is a fire hazard. Follow these simple steps and stay safe this grilling season.

Charcoal Grills

- ✓ If you use a starter fluid, use only charcoal starter fluid. Never add charcoal fluid or any other flammable liquids to the fire.
- ✓ When you are finished grilling, let the coals completely cool (for about 48 hours) before disposing in a metal container.

Propane Grills

- ✓ Check the gas tank hose for leaks before using for the first time each year.
- ✓ If your grill has a gas leak and the leak stops, get the grill serviced by a professional before using it again. If the leak does not stop, call the fire department.
- ✓ If the flame goes out, turn the grill and gas off and wait at least 15 minutes before re-lighting it.

ORANGE COUNTY FIRE AUTHORITY

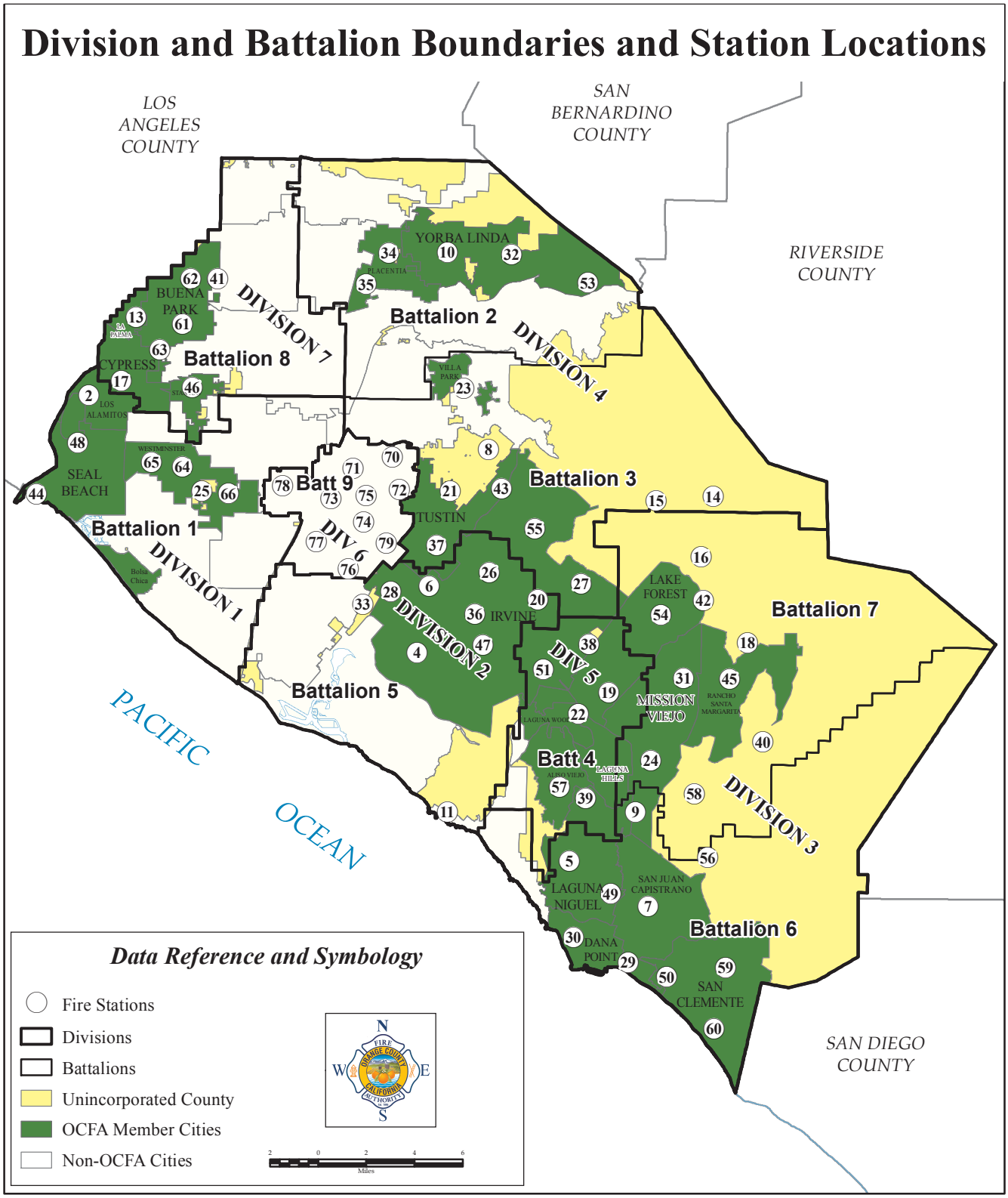

SOURCE: Information Technology Division, Geographic Information Systems

ORANGE COUNTY FIRE AUTHORITY
List of Stations by Member Agency

	City of Aliso Viejo #57, 57 Journey, 92656
	City of Buena Park #61, 8081 Western Ave. 90620 #62, 7780 Artesia Blvd. 90621 #63, 9120 Holder St. 90620
	City of Cypress #17, 4991 Cerritos Ave. 90630
	City of Dana Point #29, 26111 Victoria Blvd. 92624 #30, 23831 Stonehill Dr. 92629
	City of Irvine #4, 2 California Ave. 92612 #6, 3180 Barranca Pkwy. 92606 #20, 6933 Trabuco Rd., 92618 #26, 4691 Walnut Ave. 92604 #27, 12400 Portola Springs 92618 #28, 17862 Gillette Ave. 92614 #36, 301 E. Yale Loop 92604 #38, 26 Parker 92618 #47, 47 Fossil 92603 #51, 18 Cushing 92618 #55, 4955 Portola Pkwy. 92620

	City of La Palma #13, 7822 Walker St. 90623
	Cities of Laguna Hills / Laguna Woods #22, 24001 Paseo de Valencia, Laguna Hills 92653
	City of Laguna Niguel #5, 23600 Pacific Island Dr. 92677 #39, 24241 Avila Rd. 92677 #49, 31461 St. of the Golden Lantern 92677
	City of Lake Forest #19, 23022 El Toro Rd. 92630 #42, 19150 Ridgeline Rd., 92679 #54, 19811 Pauling Ave., 92610
	City of Los Alamitos #2, 3642 Green Ave. 90720
	City of Mission Viejo #9, #9 Shops at Mission Viejo 92691 #24, 25862 Marguerite Pkwy. 92692 #31, 22426 Olympiad Rd. 92692

City of Placentia
#34, 1530 N. Valencia 92870
#35, 110 S. Bradford 92870

City of Rancho Santa Margarita
#45, 30131 Aventura 92688

City of San Clemente
#50, 670 Camino de Los Mares 92672
#59, 48 Avenida La Pata 92673
#60, 100 Avenida Victoria 92672

City of San Juan Capistrano
#7, 31865 Del Obispo 92675

City of Santa Ana
#70, 2301 Old Grand 92701
#71, 1029 West 17th St. 92706
#72, 1688 East 4th St. 92701
#73, 419 Franklin 92703
#74, 1427 South Broadway 92707
#75, 120 West Walnut 92701
#76, 950 West MacArthur 92707
#77, 2317 South Greenville 92704
#78, 501 North Newhope 92703
#79, 1320 East Warner 92705

City of Seal Beach
#44, 718 Central Ave. 90740
#48, 3131 N. Gate Rd. 90740

City of Stanton
#46, 7871 Pacific St. 90680

City of Tustin
#37, 15011 Kensington Park Dr. 92780
#43, 11490 Pioneer Way 92782

City of Villa Park
#23, 5020 Santiago Canyon Rd. 92869

City of Westminster
#64, 7351 Westminster Blvd. 92683
#65, 6061 Hefley St. 92683
#66, 15061 Moran St. 92683

City of Yorba Linda
#10, 18422 E. Lemon Dr. 92886
#32, 20990 Yorba Linda Blvd. 92887
#53, 25415 La Palma Ave. 92887

County of Orange, Unincorporated
#8, 10631 Skyline Dr., Santa Ana 92705
#11, 259 Emerald Bay, Laguna Beach 92651
#14, P.O. Box 12, Silverado 92676
#15, 27172 Silverado Canyon Rd., Silverado 92676
#16, 28891 Modjeska Canyon Rd., Silverado 92676
#18, 30942 Trabuco Canyon Rd., Trabuco Canyon 92679
#21, 1241 Irvine Blvd., Tustin 92780
#25, 8171 Bolsa Ave., Midway City 92655
#40, 25082 Vista del Verde, Coto de Caza 92679
#56, 56 Sendero Way, Rancho Mission Viejo 92694
#58, 58 Station Way, Ladera Ranch 92694

Specialty Stations

Airport Rescue & Firefighting
#33, 374 Paularino, Costa Mesa 92626

Helicopter Operations
#41, 3900 W. Artesia Ave., Fullerton 92633

ORANGE COUNTY FIRE AUTHORITY
Description of the Organization, Programs and Service Delivery
June 30, 2016

EXECUTIVE MANAGEMENT

Orange County Fire Authority (OCFA) is managed by an appointed Fire Chief and five Assistant Chiefs. Service activities are organized into five departments – Operations, Community Risk Reduction, Business Services, Support Services, and Organizational Planning.

Executive Management is responsible for planning, organizing, evaluating fire and emergency services, and providing direction to all departments within the organization. Executive Management also ensures that the types and levels of services provided are consistent with Board policy and the adopted budget. The following divisions report directly to the Fire Chief and are not included in one of the five departments:

Communications and Public Affairs facilitates many of the traditional organizational communications functions that include public information and media relations, public education and community outreach, legislative affairs, and multi-media services.

The **Human Resources Division** provides programs and services designed to support the OCFA and its employees in the achievement of its mission and objectives.

- Employee Benefits is responsible for the administration of employee benefit programs, including health, accidental death and dismemberment, dental, vision, life, disability and optional benefit plans. This section is also responsible for administrative duties and services to employees covering most areas of the Human Resources Division.

- Employee Relations oversees classification and compensation studies, recruitment and selection, labor negations, and Memorandum of Understanding (MOU) administration.

- Risk Management administers OCFA's general liability insurance, workers' compensation self-insurance program, and occupational safety and health programs.

General Counsel – The OCFA contracts with the firm of Woodruff, Spradlin, & Smart located in Costa Mesa, California for its legal services. General Counsel reports directly to the Board of Directors.

OPERATIONS DEPARTMENT

The Operations Department is responsible for providing command and control direction regarding daily operations and all fire suppression activities, including resource utilization, deployment and staffing during major emergencies and disaster or extreme weather staffing conditions. Also included are other fire services such as community volunteer services, emergency medical services, training and safety, and air operations.

Operations Training and Safety (Training) – Training delivers and facilitates all operations personnel training

activities. This includes research, development and implementation of a variety of training courses, including basic and advanced firefighter techniques and administrative and supervisory training. Training coordinates and administers recruit and promotional training academies including reserve firefighters, firefighters, lateral paramedics, engineers and officer academies. Training also maintains a strong working relationship with Santa Ana College and the California Joint Apprentice Commission (CFFJAC) and is a leader in training research and development of the Orange County Training Officers Board locally, and the Training Resources and Data Exchange (TRADE) nationally. This section also serves in a lead capacity on issues of employee and incident safety, with training officers doubling as incident safety officers.

Divisions I through VII – There are seven operational divisions, each under the command of a Division Chief, encompassing geographical areas throughout the OCFA's jurisdiction. Divisions are divided into field battalions, which are under the command of Battalion Chiefs. Within these field battalions are 72 fire stations that provide for regional emergency response to all structure fires, medical aids, rescues, hazardous materials incidents and wildland fires. Battalion Chiefs also oversee various support activities and specialty resources, which are described in more detail below.

Division I	• **Battalion 1** primarily serves the cities of Los Alamitos, Seal Beach, and Westminster, as well as the unincorporated communities of Midway City and Rossmoor. • Division I also assists with the provision of emergency services to Seal Beach Naval Weapons Station and the Joint Forces Training Base in Los Alamitos.
Division II	• **Battalion 5** primarily serves the city of Irvine and the unincorporated community of Emerald Bay. • Division II provides emergency services to the University of California, Irvine (UCI), John Wayne Airport (JWA), and the Orange County Great Park. The division also provides administration, oversight, and training for the Airport Rescue Fire Fighting (ARFF) services and the Fire Exploring Program.
Division III	• **Battalion 6** primarily serves the cities of Dana Point, San Clemente, and San Juan Capistrano, as well as other unincorporated areas of southern Orange County. • **Battalion 7** primarily serves the cities of Mission Viejo and Rancho Santa Margarita, as well as the unincorporated communities of Coto de Caza, Trabuco Canyon, Modjeska Canyon, Ladera Ranch, and other unincorporated areas of southern Orange County. • Division III oversees specialized emergency response capabilities and equipment for the **Urban Search and Rescue** task force, which includes the Swift Water Rescue program and the Mass Casualty Unit.

Division IV	• **Battalion 2** primarily serves the cities of Placentia and Yorba Linda, as well as the unincorporated communities of Tonner Canyon, Carbon Canyon, and Chino Hills State Park. • **Battalion 3** primarily serves the cities Tustin and Villa Park; a portion of northern Irvine; and the unincorporated communities of Cowan Heights, Lemon Heights, Orange Park Acres, Irvine Lake, and Silverado Canyon. • **Community Volunteer Services (CVS)** is responsible for the coordination of Reserve Firefighters (RFF) who provide emergency medical aid, fire suppression and support services responding out of three stand-alone fire stations, five combination fire stations (both RFF and career personnel assigned), one RFF Fire Crew location, and one RFF Helicopter Crew location. CVS also administers and coordinates the OCFA Chaplain Program. • **Emergency Medical Services** (EMS) manages the delivery of medical services by OCFA's emergency medical technicians (EMT) and paramedics. This includes the implementation of the continuing quality improvement program; continuing education for both career and reserve personnel; ongoing review of patient care; supply and equipment evaluation and purchasing; monitoring and tracking of paramedic licensure and EMT certifications; ambulance contract administration oversight; and paramedic recruitment, selection, evaluation, and accreditation. In addition, EMS serves as a liaison to county and state regulatory agencies, hospitals, ambulance providers, and other EMS groups. o The **Wellness and Fitness (WEFIT)** program reports to EMS. Responsibilities include scheduling wellness exams; coordinating peer fitness trainers; providing employee health education and fitness programs; and providing physical training for academy recruits.
Division V	• **Battalion 4** primarily serves the cities of Aliso Viejo, Laguna Hills, Laguna Niguel, Laguna Woods, and Lake Forest, as well as portions of Irvine. • Division V is also responsible for the ongoing oversight and management of the Staffing Program, which ensures correct, 24/7 staffing levels at all stations; the Staffing Committee; and the employee transfer process within the Operations Department.
Division VI	• **Battalion 9** primarily serves the city of Santa Ana. • The division also provides administration, oversight, and training for the Hazardous Materials Response Team (HMRT) and the Fire and Law Enforcement Joint Hazard Assessment Team (JHAT).
Division VII	• **Battalion 8** primarily serves the cities of Buena Park, Cypress, La Palma, and Stanton. • **Air Operations** is responsible for coordination of the OCFA's helicopters. OCFA currently maintains firefighting helicopters used for emergency responses throughout the year for wildland and wildland urban interface fires and special rescues such as swift and still water rescues, medical rescue support and disaster mitigation. • Division VII also provides oversight for the OCFA Equipment Committee.

COMMUNITY RISK REDUCTION DEPARTMENT

The Community Risk Reduction Department contributes to community safety and prosperity through the systematic mitigation of risk. Staff work with the development community and partner agencies to help build safe communities; with community stakeholders and residents to maintain and enhance safety at the neighborhood level; and with other agencies and stakeholders to evaluate losses and improve mitigation through engineering, education and enforcement.

Investigation Services – The Investigation Services Division is responsible for investigating or reviewing fires to determine definitive causes for use in developing intervention strategies. After the initial origin and cause investigation is complete, follow-up investigations on criminal fires are conducted in cooperation with local, state and federal law enforcement agencies. Criminal cases are filed with the District Attorney's Office, while juvenile-related fires may be handled through the Fire F.R.I.E.N.D.S. diversion program. The follow-up of non-criminal fire is conducted with the cooperation of local building officials and technical experts, with the intended result to reduce the reoccurrence of fires by accurately determining the root cause of all fires.

Planning and Development – The Planning and Development Division ensures that new developments meet state and local fire and life safety requirements.

- **Plan Review** serves as the entry point into OCFA's planning and development process. Front counter and plan review staff work closely with the development community, as well as partner agency planning and building staff, to facilitate development and construction consistent with accepted safety practices and adopted standards. Responsibilities including reviewing conceptual community design proposals and building fire protection systems, as well as specific hazardous processes to ensure that appropriate design features have been integrated into each project. Staff also facilitate the adoption and implementation of the latest fire code every three years, and develop local amendments to address risks unique to Orange County.

- **New Construction Inspections** is the second major component of OCFA's planning and development process. Staff assume responsibility for each project once actual construction commences, and work with contractors to ensure that projects are constructed in a manner consistent with adopted fire and life safety standards.

- Planning and Development also administers the **Smoke Alarm Program**, an educational vehicle to deliver the message that working smoke alarms save lives. The program incorporates the United States Fire Administration's campaign line of "*Install, Inspect, Protect*" as the precursor to the overall educational message, and uses it to explain the process of installing, inspecting, and protecting your home.

Pre-Fire Management – The Pre-Fire Management Division focuses on the systematic reduction and mitigation of risk in the community.

- The **Community Wildfire Mitigation** program coordinates all efforts within OCFA specific to wildland fire prevention. The focus is to eliminate the loss of life; reduce the risk of wildfire to the communities and the environment; and reduce loss of property from wildfire.

- The **Fuel Modification** program complements both the Plan Review and New Construction Inspection programs for projects located in areas where vegetation poses a hazard to buildings and occupants. Staff assesses hazards and works with developers to apply special vegetation treatments and building construction features designed to reduce wildfire risk.

- **Crews and Equipment** is responsible for coordinating firefighting hand crews and heavy fire equipment. In addition to training and emergency response, responsibilities include preventative mitigation projects such as fire road and fuel break construction maintenance and projects at OCFA facilities.

Prevention Field Services – Prevention Field Services works with business and building owners and managers to ensure they understand the need and process for maintaining facilities and fire/life safety systems that are safe for occupants. The program consists of annual maintenance inspections based on the occupancy classifications and associated risks. Additionally, program staff issue permits for hazardous processes and special activities.

BUSINESS SERVICES DEPARTMENT

The Business Services Department provides public records oversight; all financial functions; purchasing, receiving, shipping, warehousing and mail operations; and treasury and financial planning services.

Clerk of the Authority – The Clerk of the Authority (COA) facilitates the Board's policy-making process; records and validates the proceedings of the Board and Committees; and provides timely and thorough access to public records. The COA ensures the legislative process is open and public by publishing and posting notices as required by law. It administers the activities pertaining to Board legislation, processes Board/Committee-approved agenda items, manages public records requests, and researches and disseminates information concerning Board/Committee actions to both OCFA staff and the public. The COA is the Fair Practice Commission's filing official for the OCFA. The office is responsible for processing all subpoenas for business records and witnesses.

Finance Division – The Finance Division provides all financial functions, as well as treasury support services. The Finance Division oversees the accounting, reporting, planning and auditing of all OCFA financial records. It is also responsible for developing policies and procedures designed to protect and safeguard OCFA's financial assets. Specific functions and responsibilities include accounts receivable; general accounting (including financial reporting and the monitoring and inventorying of OCFA's fixed and controlled assets); cost accounting (including grants and incident restitutions); accounts payable (including procurement cards and travel-related disbursements); payroll; and timekeeping.

Purchasing and Materiel Management – The Purchasing Division administers the centralized procurement of all supplies, services, equipment, and construction services through competitive solicitations. Through centralized procurement, OCFA achieves standardized bidding and evaluation procedures; economies of scale on agency purchases; and an open, fair and competitive procurement process. The Purchasing Division is also responsible for developing and administering procurement policies and procedures and the procurement card program.

- The Materiel Management (Service Center) section provides shipping, receiving, and warehousing services for the OCFA; performs mail processing and delivery services; certifies and maintains breathing apparatus;

provides repair and fabrication services on equipment, woodworking, safety garments, and tools; manages the acquisition and distribution of bulk supplies and equipment; provides logistical support for both minor and major emergencies; and administers surplus disposition.

Treasury and Financial Planning – The Treasury and Financial Planning Division is responsible for providing cash management, budget development, and administrative support to the OCFA. Treasury services include monitoring cash balances, managing the investment portfolio in compliance with OCFA's investment policy, issuing and administering long and short-term debt, providing oversight for the deferred compensation program, and providing analytical support for the Employee Benefits section. Financial planning services include preparation of the budget, monthly analysis and reporting of revenue and expenditure activities, annual reviews of OCFA's financial health, financial forecasting, and special financial studies. Additional responsibilities include maintenance of lease-purchase agreements and various administrative support functions.

SUPPORT SERVICES DEPARTMENT

The Support Services Department provides support to all departments of the OCFA. Responsibilities include emergency command; preventative maintenance, repair, acquisition, outfitting and disposal of vehicles and apparatus; system development, acquisition, installation and repair of communication and information systems hardware and software; and facility design, construction, repair and maintenance.

Emergency Command Center – The Emergency Command Center (ECC) is responsible for the dispatching function, which includes receiving emergency calls via 911, radio and other telecommunication links; assigning and controlling appropriate emergency response resources; managing unassigned resources to ensure adequate coverage; and providing a communication link for ambulances, law enforcement and other response agencies to fire emergencies. The ECC continues to maintain the Fire Station Order File, an essential component for Computer Aided Dispatch (CAD) operations.

Fleet Services – The Fleet Services Division provides a full line of services to meet the needs of all vehicle and fire apparatus operated by the OCFA. Fleet Services is responsible for all scheduled preventative maintenance; major repairs on all vehicles and fire apparatus in the fleet; twenty-four hour field repair service and tire repair; renovations and upgrades needed to meet changing equipment outfitting needs; recommending apparatus rotations in the attempt to meet mileage and life goals; and testing/certifying specialty equipment. It also develops vehicle/apparatus specifications and oversees the procurement, safety, manufacturing, and quality assurance of all vehicles/apparatus. Fleet Services is responsible for all bulk fuel ordering and administration of the Voyager fuel card accounts.

Information Technology Division – The Information Technology Division is responsible for the development, operation, maintenance and security of OCFA's computers, network and overall technical infrastructure; the development and support of information systems applications and databases; maintenance of centralized enterprise Geographic Information System (GIS) and mapping capabilities; and the acquisition and maintenance of emergency communications equipment. Activities include development and monitoring of IT standards and guidelines; internal and external network development and coordination; and evaluation, selection and deployment for all computers, printers and automation software and hardware purchases, upgrades and replacements. Additional activities include the analysis, design, programming, implementation, maintenance

and security for existing and future computer systems; oversight or the installation of radios and Mobile Data Computers (MDC's) in emergency apparatus; and oversight for fire station alarm systems.

Property Management – The Property Management Division builds, manages and maintains the real property and durable infrastructure of the OCFA. Construction management responsibilities include design, planning and construction of stations built by OCFA, and planning assistance and construction consultation for developer and city built fire stations. Facilities management oversees preventative maintenance, repairs, alterations and improvements of the Regional Fire Operations and Training Center (RFOTC) and fire stations. Property Management also oversees utility usage, energy conservation and regulatory compliance.

ORGANIZATIONAL PLANNING DEPARTMENT

The Organizational Planning Department oversees emergency management planning, performance improvement, and organization-wide strategic and advanced planning.

Emergency Planning and Coordination (EPAC) coordinates OCFA's emergency planning with federal, state and local jurisdictions and agencies; manages the Department Operations Center (DOC) during major emergencies; serves as the OCFA liaison to any agency requiring information on emergency response or planning; and represents the OCFA on working task forces such as the State and Federal Terrorism Task Force, Orange County Intelligence Assessment Center, Nuclear Power Authority, and Marine Disaster. This section coordinates all United States Forest Service (USFS), California Department of Forestry (CDF) and Fire Protection (CALFIRE) contract issues, contract counties review and automatic aid issues. EPAC also maintains and updates all city and county emergency plans, the Multi-Agency Mutual Aid Plan, California Emergency Management Agency (CALEMA) Mutual Aid Plan, Orange County Fire Service Operations Area Annex and Mutual Aid Plan, and the OCFA Supplement Response Guidebook.

Organizational Training & Development facilitates progress and processes that foster learning and development opportunities.

Strategic Services provides strategic and advanced planning functions for OCFA. Areas of responsibility include analyzing and monitoring impacts of development, annexation and incorporations; initiating agreements with developers for acquisition of new facilities; and researching demographic issues in order to determine appropriate service levels and benchmarks. Strategic Services also coordinates the OCFA Strategic Plan; responds to requests for parcel information, station location, Insurance Services Office (ISO) ratings and demographic information; and prepares proposals for fire services, accreditation and special reports as required.

Attachment 2

ORANGE COUNTY FIRE AUTHORITY

Financial Statements

Fiscal Year Ended June 30, 2016

This Page Intentionally Left Blank

ORANGE COUNTY FIRE AUTHORITY
Financial Statements
Year ended June 30, 2016

TABLE OF CONTENTS

Independent Auditors' Report 1

Management's Discussion and Analysis 5

Basic Financial Statements:
- Government-wide Financial Statements:
  - Statement of Net Position 27
  - Statement of Activities 29
- Fund Financial Statements:
  - Governmental Funds:
    - Balance Sheet 30
    - Reconciliation of the Balance Sheet of Governmental Funds to the Statement of Net Position 32
    - Statement of Revenues, Expenditures and Changes in Fund Balances 34
    - Reconciliation of the Statement of Revenues, Expenditures and Changes in Fund Balances of Governmental Funds to the Statement of Activities 36
    - Budgetary Comparison Statement – General Fund 38
  - Fiduciary Funds:
    - Statement of Fiduciary Net Position 39
    - Statement of Changes in Fiduciary Net Position 40
- Notes to the Financial Statements 41

Required Supplementary Information:
- OCERS Retirement Plan:
  - Schedule of OCFA's Proportionate Share of the Net Pension Liability 93
  - Schedule of Contributions 94
- Extra Help Retirement Plan:
  - Schedule of Changes in Net Pension Liability and Related Ratios 96
  - Schedule of Funding Progress 97
  - Schedule of Investment Returns 98
- Retiree Medical Plan:
  - Schedule of Funding Progress 99
  - Schedule of Contributions from the Employer and Other Contributing Entities 100

Supplementary Schedules:
- Major Governmental Funds:
  - Budgetary Comparison Schedules:
    - Communications and Information Systems 102
    - Fire Apparatus 103
    - Fire Stations and Facilities 104
  - Components of General Fund:
    - Combining Balance Sheet 106
    - Combining Schedule of Revenues, Expenditures and Changes in Fund Balances 108
    - Combining Original Budget 110
    - Combining Final Budget 111

This Page Intentionally Left Blank

LSL

CPAs AND ADVISORS

INDEPENDENT AUDITORS' REPORT

To the Board of Directors
Orange County Fire Authority
Irvine, California

Report on the Financial Statements

We have audited the accompanying financial statements of the governmental activities, the aggregate discretely presented component units, each major fund, and the aggregate remaining fund information of Orange County Fire Authority (the "Authority") as of and for the year ended June 30, 2016, and the related notes to the financial statements, which collectively comprise the Authority's basic financial statements as listed in the table of contents.

Management's Responsibility for the Financial Statements

Management is responsible for the preparation and fair presentation of these financial statements in accordance with accounting principles generally accepted in the United States of America; this includes the design, implementation, and maintenance of internal control relevant to the preparation and fair presentation of financial statements that are free from material misstatement, whether due to fraud or error.

Auditor's Responsibility

Our responsibility is to express opinions on these financial statements based on our audit. We conducted our audit in accordance with auditing standards generally accepted in the United States of America and the standards applicable to financial audits contained in *Government Auditing Standards*, issued by the Comptroller General of the United States. Those standards require that we plan and perform the audit to obtain reasonable assurance about whether the financial statements are free from material misstatement.

An audit involves performing procedures to obtain audit evidence about the amounts and disclosures in the financial statements. The procedures selected depend on the auditor's judgment, including the assessment of the risks of material misstatement of the financial statements, whether due to fraud or error. In making those risk assessments, the auditor considers internal control relevant to the entity's preparation and fair presentation of the financial statements in order to design audit procedures that are appropriate in the circumstances, but not for the purpose of expressing an opinion on the effectiveness of the entity's internal control. Accordingly, we express no such opinion. An audit also includes evaluating the appropriateness of accounting policies used and the reasonableness of significant accounting estimates made by management, as well as evaluating the overall presentation of the financial statements.

We believe that the audit evidence we have obtained is sufficient and appropriate to provide a basis for our audit opinions.

Opinions

In our opinion, the financial statements referred to above present fairly, in all material respects, the respective financial position of the governmental activities, the aggregate discretely presented component units, each major fund, and the aggregate remaining fund information of the Orange County Fire Authority, as of June 30, 2016, and the respective changes in financial position and the respective budgetary comparison statement for the General Fund, for the year then ended in accordance with accounting principles generally accepted in the United States of America.

Change in Accounting Principle

As discussed in Note 2 to the financial statements, in 2016 the City adopted new accounting guidance, GASB Statement No. 72, *Fair Value Measurement and Application.*

Other Matters

Required Supplementary Information

Accounting principles generally accepted in the United States of America require that the management's discussion and analysis, the schedule of changes in net pension liability and related ratios, the schedule of contributions, the schedule of investment returns, the schedule of net pension liability, and the schedule of proportionate share of the net pension liability be presented to supplement the basic financial statements. Such information, although not a part of the basic financial statements, is required by the Governmental Accounting Standards Board, who considers it to be an essential part of financial reporting for placing the basic financial statements in an appropriate operational, economic, or historical context. We have applied certain limited procedures to the required supplementary information in accordance with auditing standards generally accepted in the United States of America, which consisted of inquiries of management about the methods of preparing the information and comparing the information for consistency with management's responses to our inquiries, the basic financial statements, and other knowledge we obtained during our audit of the basic financial statements. We do not express an opinion or provide any assurance on the information because the limited procedures do not provide us with sufficient evidence to express an opinion or provide any assurance.

Prior Year Comparative Information

The financial statements include (partial or summarized) prior-year comparative information. Such information does not include all of the information required or sufficient detail to constitute a presentation in conformity with accounting principles generally accepted in the United States of America. Accordingly, such information should be read in conjunction with the government's financial statements for the year ended June 30, 2015, from which such partial information was derived.

LSL
CPAs AND ADVISORS

To the Board of Directors
Orange County Fire Authority

Other Information

Our audit was conducted for the purpose of forming opinions on the financial statements that collectively comprise the Authority's basic financial statements.

The combining and individual fund financial statements and budgetary comparison schedules are the responsibility of management and were derived from and relate directly to the underlying accounting and other records used to prepare the basic financial statements. The information has been subjected to the auditing procedures applied in the audit of the basic financial statements and certain additional procedures, including comparing and reconciling such information directly to the underlying accounting and other records used to prepare the basic financial statements or to the basic financial statements themselves, and other additional procedures in accordance with auditing standards generally accepted in the United States of America. In our opinion, the combining and individual fund financial statements and the budgetary comparison schedules are fairly stated in all material respects in relation to the basic financial statements as a whole.

Other Reporting Required by *Government Auditing Standards*

In accordance with *Government Auditing Standards*, we have also issued our report dated September 30, 2016 on our consideration of the Authority's internal control over financial reporting and on our tests of its compliance with certain provisions of laws, regulations, contracts, and grant agreements and other matters. The purpose of that report is to describe the scope of our testing of internal control over financial reporting and compliance and the results of that testing, and not to provide an opinion on internal control over financial reporting or on compliance. That report is an integral part of an audit performed in accordance with *Government Auditing Standards* in considering the Authority's internal control over financial reporting and compliance.

Lance, Soll & Lunghard, LLP

Brea California
September 30, 2016

This Page Intentionally Left Blank

ORANGE COUNTY FIRE AUTHORITY
Management's Discussion and Analysis
Year ended June 30, 2016

As management of the Orange County Fire Authority (OCFA), we offer readers of OCFA's financial statements this overview and analysis of the financial activities for the fiscal year ended June 30, 2016.

Financial Highlights

Governmental Activities: OCFA's liabilities and deferred inflows of resources exceeded assets and deferred outflows of resources by $160,663,918 at the end of the current fiscal year. Net position consisted of net investment in capital assets totaling $187,910,677; restricted for capital projects and other purposes totaling $547,099; and an unrestricted deficit totaling $349,121,694. The result of current fiscal year operations caused total net position to decrease by $4,521,893 from the prior fiscal year.

Governmental Funds: As of the close of the current fiscal year, the OCFA's governmental funds showed combined ending fund balances totaling $209,370,885, an increase of $32,481,099 from the prior fiscal year. Of the total ending fund balance, $36,756,804 (17.6%) was available for funding future operational needs.

General Fund: At the end of the current fiscal year, total fund balance for the General Fund was $153,057,705, and was categorized as follows:

❖ Nonspendable	$ 36,779,845
❖ Restricted	13,867
❖ Committed	584,464
❖ Assigned	78,922,725
❖ Unassigned	36,756,804
Fund balance of the General Fund as of June 30, 2016	$153,057,705

Overview of the Financial Statements

This discussion and analysis is intended to serve as an introduction to OCFA's basic financial statements. The basic financial statements are comprised of the following three components: (1) government-wide financial statements, (2) fund financial statements, and (3) notes to the financial statements. This financial report also contains required and other supplementary information in addition to the basic financial statements.

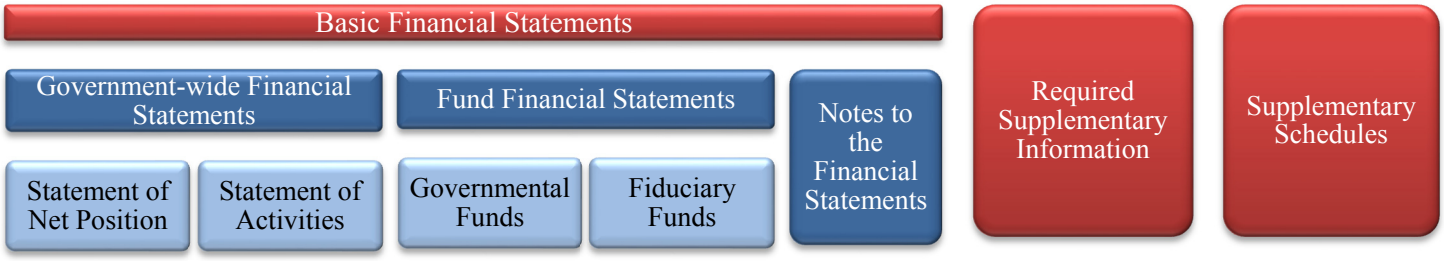

Government-wide Financial Statements: The government-wide financial statements are designed to provide readers with a broad overview of OCFA's finances, in a manner similar to a private-sector business. Public safety activities are reported as governmental activities, since they are principally supported by taxes and intergovernmental revenues. The government-wide financial statements can be found on pages 27-29.

Statement of Net Position: The statement of net position presents information on all of OCFA's assets, deferred outflows of resources, liabilities, and deferred inflows of resources, with the net differences reported as net position. Over time, increases or decreases in net position may serve as a useful indicator of whether the financial position of OCFA is improving or deteriorating.

Statement of Activities: The statement of activities presents information showing how OCFA's net position changed during the most recent fiscal year. All changes in net position are reported as soon as the underlying event giving rise to the change occurs, regardless of the timing of related cash flows. Thus, revenues and expenses are reported in this statement for some items that will only result in cash flows in future fiscal periods.

Fund Financial Statements: A fund is a grouping of related accounts that is used to maintain control over resources that have been segregated for specific activities or objectives. OCFA, like other state and local governments, uses fund accounting to ensure and demonstrate compliance with finance-related legal requirements. OCFA's funds can be divided into two categories – governmental funds and fiduciary funds.

Governmental Funds: Governmental funds are used to account for essentially the same functions reported as governmental activities in the government-wide financial statements. However, unlike the government-wide financial statements, governmental fund financial statements focus on near-term inflows and outflows of spendable resources, as well as on balances of spendable resources available at the end of the fiscal year. Such information may be useful in evaluating a government's near-term financing requirements. Because the focus of government funds is narrower than that of the government-wide financial statements, it is useful to compare the information presented for governmental funds with similar information presented for governmental activities in the government-wide financial statements. By doing so, readers may better understand the long-term impact of OCFA's near-term financial decisions. Both the governmental funds balance sheet and the governmental funds statement of revenues, expenditures and changes in fund balances provide reconciliations to facilitate this comparison.

OCFA reports four individual governmental funds. Information is presented separately in the fund financial statements for all four governmental funds, since OCFA has elected to classify all governmental funds as major funds. The OCFA adopts an annual appropriated budget for each governmental fund. Budgetary comparison statements and schedules have been provided for the governmental funds to demonstrate compliance with this budget. The basic governmental fund financial statements can be found on pages 30-38.

Fiduciary Funds: Fiduciary funds are used to account for resources held for the benefit of parties outside the government. Fiduciary funds are not reflected in the government-wide financial statements because the resources of those funds are not available to support OCFA's own programs. Combined basic fiduciary fund financial statements can be found on pages 39-40.

Notes to the Financial Statements and Required Supplementary Information (RSI): The notes and RSI provide additional information that is essential to a full understanding of the data provided in the government-wide and fund financial statements. The notes to the financial statements can be found on pages 41-90, while RSI can be found on pages 91-100.

Supplementary Schedules: The budgetary schedules referred to earlier in connection with governmental funds are presented in the supplementary schedules section. Combining and individual fund statements and schedules can be found on pages 101-111.

Government-wide Financial Analysis

Net Position: As noted earlier, net position may serve over time as a useful indicator of a government's financial position. In the case of OCFA, net position totaled a deficit of $160,663,918 at the end of the most recent fiscal year, a 5.0% improvement from the prior fiscal year. Following is a summary of the OCFA's net position as of June 30, 2016 and 2015:

ORANGE COUNTY FIRE AUTHORITY's Net Position

Governmental Activities	June 30, 2016	June 30, 2015	Increase (Decrease) Amount	%
Assets:				
Current and other assets	$ 228,981,439	$ 208,723,950	$20,257,489	9.7%
Capital assets	194,021,124	199,246,842	(5,225,718)	-2.6%
Total assets	423,002,563	407,970,792	15,031,771	3.7%
Deferred outflows of resources:				
Related to pensions	139,040,544	85,763,924	53,276,620	6.2%
Total deferred outflows of resources	139,040,544	85,763,924	53,276,620	6.2%
Liabilities:				
Long-term liabilities	668,803,193	611,877,324	56,925,869	9.3%
Other liabilities	17,992,265	29,787,326	(11,795,061)	-4.0%
Total liabilities	686,795,458	641,664,650	45,130,808	7.0%
Deferred inflows of resources:				
Related to pensions	35,911,567	21,194,439	14,717,128	6.9%
Total deferred inflows of resources	35,911,567	21,194,439	14,717,128	6.9%
Net position:				
Net investment in capital assets	187,910,677	190,800,116	(2,889,439)	-1.5%
Restricted for capital projects	533,232	533,232	-	n/a
Restricted for other purposes	13,867	55,538	(41,671)	-0.8%
Unrestricted	(349,121,694)	(360,513,259)	11,391,565	3.2%
Total net position	$(160,663,918)	$(169,124,373)	$ 8,460,455	5.0%

- At June 30, 2016, the largest portion of OCFA's net position reflects its investment in capital assets, less related outstanding debt used to acquire those assets. OCFA uses these capital assets to provide services to citizens; consequently, these assets are not available for future spending. Although OCFA's investment in its capital assets is reported net of related debt, it should be noted that the repayment of any debt issued to acquire capital assets must be from other sources. OCFA cannot sell the assets to obtain funding.

- An additional portion of OCFA's net position represents resources that are subject to external restrictions on how they may be used. As of June 30, 2016, restricted net position relates to CALFIRE contract revenues that are legally restricted for new fire station development or improvements to existing fire stations, as well as donations received for specific programs and unperformed purchase orders for grant-funded programs.

- The remaining balance of net position is considered unrestricted. A positive unrestricted balance would represent amounts that may be used to meet OCFA's ongoing obligations to citizens and creditors. A deficit unrestricted balance, as reported on June 30, 2016 and June 30, 2015, indicates that OCFA's obligations (liabilities and deferred inflows of resources) currently exceed its resources (assets and deferred outflows of

resources). This deficit is due to the implementation of Governmental Accounting Standards Board (GASB) Statement No. 68 during Fiscal Year 2014/15, which required that OCFA begin reporting its net pension liabilities on the Statement of Net Position. Although the situation surrounding OCFA's pension plans did not change, the way in which they are accounted for and reported in the financial statements changed based on the new guidance provided in GASB Statement No. 68.

Changes in Net Position: Governmental activities increased OCFA's net position by $8,460,455 during the most recent fiscal year, an indication that OCFA's financial position has improved. As previously noted, the reason for the overall deficit in net position is due to a change in financial reporting requirements under GASB Statement No. 68, not the result of a change in OCFA's financial situation.

Governmental activities are divided into two categories – program and general. Program revenues are those derived directly from a government program itself, or from parties outside the government's taxpayers, and thus reduce the net cost of providing that program. Any program expenses that are not offset by program revenues must essentially be financed by general revenues, such as taxes and investment earnings. Following is a summary of OCFA's changes in net position for Fiscal Year 2015/16 and Fiscal Year 2014/15, followed by explanations for the increases or decreases in revenues and expenses between fiscal years.

ORANGE COUNTY FIRE AUTHORITY's Changes in Net Position

			Increase (Decrease)	
Governmental Activities	June 30, 2016	June 30, 2015	Amount	%
Program revenues:				
Charges for services	$ 117,263,679	$ 113,150,325	$ 4,113,354	3.6%
Operating grants and contributions	12,165,015	11,410,019	754,996	6.6%
Capital grants and contributions	3,331,088	9,182,195	(5,851,107)	-63.7%
Total program revenues	132,759,782	133,742,539	(982,757)	-0.7%
General revenues:				
Property taxes	219,840,417	205,141,237	14,699,180	7.2 %
Investment income	1,654,065	839,864	814,201	96.9%
Gain on sale of capital assets	6,000	63,953	(57,953)	-90.6%
Miscellaneous	2,823,503	1,235,004	1,588,499	128.6%
Total general revenues	224,323,985	207,280,058	17,043,927	8.2%
Total revenues	357,083,767	341,022,597	16,061,170	4.7%
Public safety expenses:				
Salaries and benefits	316,292,785	335,419,737	(19,126,952)	-5.7%
Services and supplies	35,127,573	46,073,201	(10,945,628)	-23.8%
Depreciation and amortization	9,267,982	9,050,195	217,787	2.4%
Interest on long-term debt	917,320	582,565	334,755	57.5%
Total expenses	361,605,660	391,125,698	(29,520,038)	-7.5%
Change in net position	(4,521,893)	(50,103,101)	45,581,208	
Net position, beginning of year	(169,124,373)	243,754,615	(412,878,988)	
Prior period adjustment	12,982,348	(362,775,887)	375,758,235	
Net position, end of year	$(160,663,918)	$(169,124,373)	$8,460,455	5.0%

Revenues of Governmental Activities - by Source
Fiscal Year 2015/16

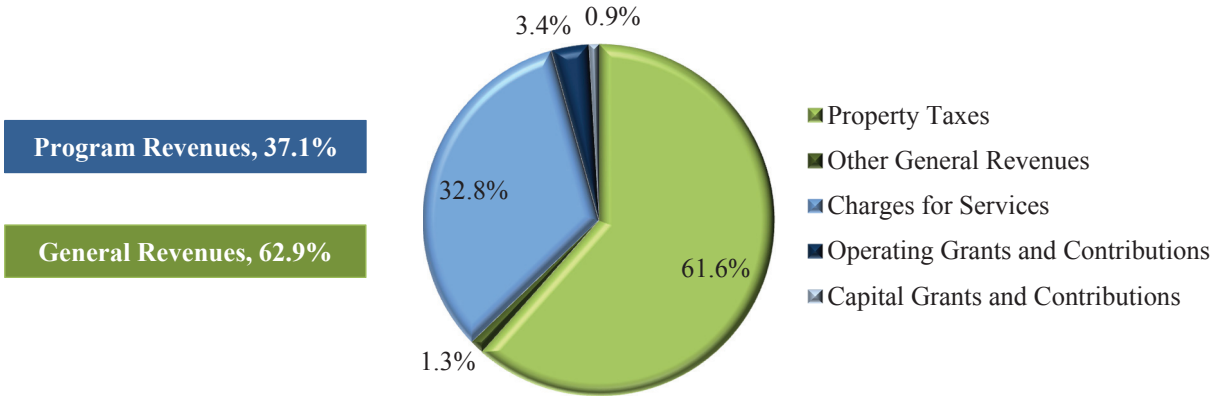

Program revenues, which totaled $132,759,782 for Fiscal Year 2015/16 and accounted for 37.1% of total revenues, decreased by $982,757 (0.7%) from the prior fiscal year. Following is a description of each program revenue type, followed by an explanation of what contributed to the net increase or decrease from the prior fiscal year.

- Charges for services include amounts received from those who purchase, use, or directly benefit from or are affected by a program. These revenues increased by $4,113,354 (3.6%) over the prior fiscal year.

Amount	Reason for Increase / Decrease
+$2,870,000	Fire service contracts increased for cash contract city charges per terms of the Joint Powers Agreement (+$2.53 million); OCFA's contract with California Department of Forestry (CALFIRE) for the protection of State Responsibility Area (SRA) lands (+$210,000); and the Airport Rescue Firefighting (ARFF) Services contract with John Wayne Airport, per terms of an amended contract that went into effect in December 2012 (+$130,000). The increase in cash contract city contract revenues includes accrual-based adjustments for revenues from the City of Santa Ana to reimburse OCFA for usage of employee general leave balances.
+$2,205,000	Reimbursements for state and federal incidents vary each year depending on fire and emergency response activity. State assistance by hire services performed for CALFIRE and the California Emergency Management Agency (CAL EMA) increased by $2.5 million. Reimbursements for state incidents were higher in the current fiscal year due to major Fiscal Year 2015/16 incidents such as the Butte Fire in September 2015. Federal assistance by hire services performed for Cleveland National Forest decreased by $315,000 primarily due to the Fiscal Year 2014/15 Silverado Fire in September 2014. Federal responses to national incidents increased by $20,000 due to responses in Fiscal Year 2015/16 for Hurricane Joaquin in October 2015 and Tropical Cyclone Amos in April 2016 .
-$435,000	Fee-based fire prevention revenues decreased primarily due to permit activity for residential site reviews; a reduction in the fire sprinkler system plan review fee effective September 2015; and a delay in the number of assembly inspections completed in the current fiscal year.
-$420,000	Revenues for ambulance transport and supplies reimbursement were lower in Fiscal Year 2015/16 due to a decline in transport activity.
-$105,000	Road maintenance, fuel reduction, and other contract revenues generated by the hand crew decreased due to a decline in the amount of work performed for Southern California Edison.
+$4,115,000	**Program Revenues: Charges for Services – Net Increase**

- Operating grants and contributions include grants, contributions, donations, and similar items that are restricted to one or more specific program. These revenues increased by $754,996 (6.6%) from the prior fiscal year.

Amount	Reason for Increase / Decrease
+$390,000	Tax increment passed through from member cities decreased by $270,000, but one-time tax increment passed through from the County of Orange increased by $660,000. In Fiscal Year 2011/12, the State of California dissolved its sixty year-old redevelopment program, and city redevelopment agencies were replaced with successor agencies to manage the wind-down of the program. Property tax increment that was formerly passed through to OCFA by various member cities has now been deposited into the newly formed Redevelopment Property Tax Trust Fund, from which the County of Orange Auditor/Controller makes disbursements.
+$480,000	Federal and state operating grants and other reimbursable revenues increased primarily due to three one-time revenue sources that were new in Fiscal Year 2015/16: • $160,000 federal grants passed through the Orange County Sherriff's Department and the City of Santa Ana for development of wildland urban interface pre-fire plans; • $100,000 reimbursement from the California Fire and Rescue Training Authority Task Force for costs incurred during a task force deployment exercise conducted in May 2016; and • $40,000 state grant from CAL FIRE via the State Responsibility Fire Prevention Fund for the development of a county-wide wildfire protection plan. In addition, annual federal grants that increased in Fiscal Year 2015/16 included the Homeland Security Grant Program passed through the Orange County Sheriff's Department for regional training costs ($25,000), and the Urban Search and Rescue (USAR) Cooperative Agreement via the Federal Emergency Management Agency to fund operations of California Task Force 5 ($155,000).
-$115,000	Other miscellaneous operating revenues decreased, primarily due to a decline in the number of reimbursable instructional hours per a contract with Santa Ana College, as well as a decline in the number of projects submitted for reimbursement from the California Joint Apprenticeship Committee.
+$755,000	**Program Revenues: Operating Grants and Contributions – Net Increase**

- Capital grants and contributions include grants, contributions, donations, and similar items that are restricted to one or more specific capital-related programs. These revenues decreased by $5,851,107 (63.7%) from the prior fiscal year.

Amount	Reason for Increase / Decrease
-$5,075,000	Revenues from developers decreased per the terms of various Secured Fire Protection Agreements. During Fiscal Year 2014/15, OCFA received over $4.5 million from various developers as reimbursement for construction of new Fire Station No. 56 (Village of Sendero) in Rancho Mission Viejo, as well as a new type 1 engine to be placed into service at the station. Contributions varied between the prior and current fiscal years based on construction projects in the cities of Irvine, Aliso Viejo, Mission Viejo, Lake Forest, and Yorba Linda, resulting in a net $575,000 increase.
-$795,000	Revenues from federal capital grants decreased by $795,000. A Community Development Block Grant project for improvements at four fire stations in the City of Santa Ana was completed in April 2015, resulting in an $825,000 decrease to capital-related federal grant reimbursements. During Fiscal Year 2014/15, OCFA also received a $10,000 Homeland Security Grant passed through the Orange County Sheriff's Department for the purchase of gas monitors. During Fiscal Year 2015/16, OCFA received a $40,000 Assistance to Firefighters grant for the purchase of vehicle extrication gloves.
+$20,000	Capital assets contributed to OCFA increased primarily due to various equipment items purchased by other government agencies via the federal Urban Area Security Initiative (UASI) grant. During Fiscal Year 2015/16, the City of Anaheim and the City of Santa Ana acquired and contributed to OCFA two search cameras and three mobile radios valued at $45,000. During Fiscal Year 2014/15, the City of Santa acquired and contributed two chemical agent detection kits valued at $35,000. In addition, during Fiscal Year 2015/16 the Orange County Fire Authority Foundation acquired and contributed to OCFA the Pulsepoint software system that had been purchased for $10,000 with a grant from Hoag Hospital.
-$5,850,000	**Program Revenues: Capital Grants and Contributions – Net Decrease**

General revenues, which totaled $224,323,985 for Fiscal Year 2015/16 and accounted for 62.9% of total revenues, increased by $17,043,927 (8.2%) over the prior fiscal year. Following is a description of each general revenue type and an explanation of what contributed to the net increase or decrease from the prior fiscal year.

<table>
<tr><th>Amount</th><th>Reason for Increase / Decrease</th></tr>
<tr><td>+$14,700,000</td><td>The largest general revenue, property taxes, increased by $14,699,180 (7.2%) over the prior fiscal year, primarily due to increases in secured property taxes.</td></tr>
<tr><td>+$1,590,000</td><td>Miscellaneous revenues increased by $1,588,499 (128.6%), primarily relating to amounts received in Fiscal Year 2015/16 from the Orange County Professional firefighters Association IAFF Local 3631 in connection with the contract governing OCFA's contributions to the firefighter medical trust, which pays monthly health care premiums for employees in the firefighter unit. Other Fiscal Year 2015/16 increases pertained to SB90 claims reimbursed from the State of California and bankruptcy proceeds from the County of Orange. These revenue sources vary from year to year.</td></tr>
<tr><td>+$810,000</td><td>Investment income increased by $814,201 (96.9%). OCFA's year-to-date effective rate of return on its investment portfolio was 0.47% as of June 30, 2016, as compared to 0.27% as of June 30, 2015. This 74.0% increase in the annual rate of return attributed to approximately $390,000 of the increase in overall interest earnings. In addition, OCFA adjusts its investments to market value as of June 30 each year. This resulted in an overall investment gain in Fiscal Year 2015/16, and attributed to approximately $50,000 of the increase in total investment income as compared to the prior fiscal year's market value gain. The market value adjustment is a "paper only" transaction, and no actual investment gains or losses have been recognized since OCFA typically holds its investments to maturity. Finally, during Fiscal Year 2015/16 OCFA issued short-term debt in the form of Tax and Revenue Anticipation Notes (TRAN), which generated a premium that was approximately $330,000 higher than the prior fiscal year's TRAN premium. These components of investment income are summarized below:
<table>
<tr><th></th><th>FY 2015/16</th><th>FY 2014/15</th><th>Increase (Decrease)</th></tr>
<tr><td>Portfolio earnings</td><td>$ 843,479</td><td>$450,815</td><td>$392,664</td></tr>
<tr><td>Market value gain (loss)</td><td>125,018</td><td>74,731</td><td>50,287</td></tr>
<tr><td>TRAN premium</td><td>612,431</td><td>275,880</td><td>336,551</td></tr>
<tr><td>Interest on property taxes</td><td>73,137</td><td>38,438</td><td>34,699</td></tr>
<tr><td>Total investment income</td><td>$1,654,065</td><td>$839,864</td><td>$814,201</td></tr>
</table></td></tr>
<tr><td>-$60,000</td><td>Gain on sale of capital assets decreased by $57,953 (90.6%), primarily due to a decline in the number of vehicles and equipment items sold at public auction. During Fiscal Year 2014/15, twelve vehicles and fifteen equipment items were sold, including a fully-depreciated dozer and loader that sold for a combined $53,000. During Fiscal Year 2015/16, only six vehicles were sold for a combined $10,000.</td></tr>
<tr><td>+$17,040,000</td><td>General Revenues – Net Increase</td></tr>
</table>

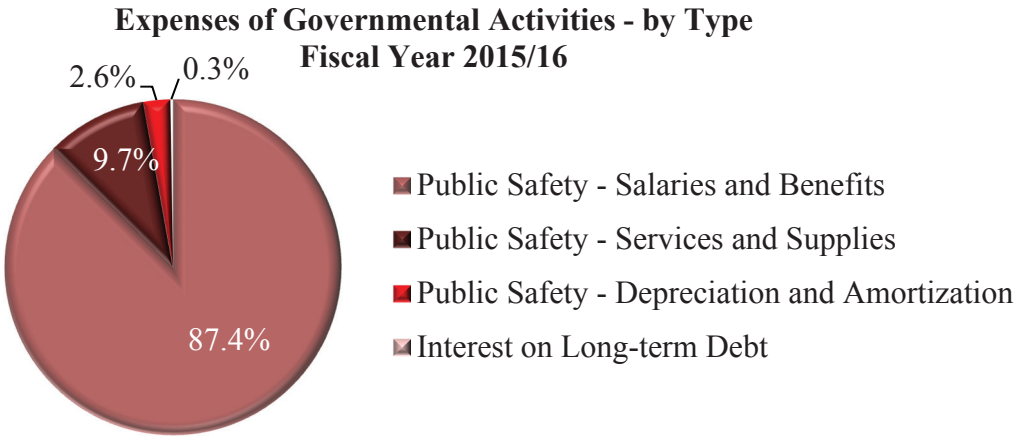

Total expenses decreased by $29,520,038 (7.5%) from the prior fiscal year. Following is an explanation of what contributed to the net increase or decrease of each expense type from the prior fiscal year.

- Salaries and benefits decreased by $19,126,952 (5.7%) from the prior fiscal year.

Amount	Reason for Increase / Decrease
-$32,640,000	Retirement costs for contributions remitted to the Orange County Employees Retirement System (OCERS) decreased by $4,840,000. Reasons for the decrease in actual plan contributions are further explained in the ***Major Governmental Funds – General Fund*** portion of this Management's Discussion and Analysis. In addition, under the requirements of GASB Statement No. 68, the amount of pension expense recognized during Fiscal Year 2015/16 in order to fully capture OCFA's share of the net pension liability and related pension expense in its governmental activities, was $27.8 million less than the prior fiscal year.
+$13,290,000	Reasons for increases and decreases to the following categories of salaries and benefits are further explained in the ***Major Governmental Funds – General Fund*** portion of this Management's Discussion and Analysis: overtime costs (+6,340,000); regular pay (+2,840,000); employee health insurance and other benefits (+$2,680,000); other pay (+$1,720,000); and vacation and sick leave payouts (-$315,000). In addition, salaries and benefits reported in the governmental activities were reduced by $25,000 in Fiscal Year 2014/15 to reflect employee labor costs that were capitalized as part of the Computer Aided Dispatch (CAD) system that went into service in September 2014.
+$600,000	The net change in long-term liabilities for various employee leave balances increased by $600,000 as compared to the prior fiscal year, and is recognized as an expense in the governmental activities. The net increase is primarily related to a decline in the use of sick leave balances by employees.
-$375,000	Other post-employment benefit (OPEB) cost for the defined benefit Retiree Medical Plan decreased by $375,000. Annual OPEB cost is equal to an annual required contribution, as determined by an actuarial valuation, plus adjustments for cumulative interest and actual contributions to the plan. An updated actuarial study is completed every other year.
-$19,125,000	**Salaries and Benefits – Net Decrease**

- Services and supplies decreased by $10,945,628 (23.8%) from the prior fiscal year.

Amount	Reason for Increase / Decrease
-$7,005,000	In September 2013, the Board of Directors approved issuance of equity payments from unrestricted revenue sources to qualifying Structural Fire Fund member agencies, based on a calculation of average Structural Fire Fund Tax rate. Equity payments totaling $7,005,000 were paid or accrued in the prior fiscal year in accordance with the 2nd Amendment to the Joint Powers Agreement. However, no equity payments were paid or accrued in Fiscal Year 2015/16 because the 2nd Amendment to the Joint Powers Agreement was nullified by the court.
-$5,330,000	OCFA's long-term liability for workers' compensation reflects the present value of estimated outstanding losses, as determined by an actuarial valuation and the "confidence level" set by the Board of Directors. The change in the actuarial liability estimate, plus actual cash claims paid, is recognized as an expense. Workers' compensation expense decreased as follows:

	FY 2015/16	FY 2014/15	Increase (Decrease)
Actual claims paid	$ 7,890,000	$ 6,450,000	$ 1,440,000
Change in actuarial estimate	(1,165,000)	5,605,000	(6,770,000)
Total fiscal year expense	$6,725,000	$12,055,000	$(5,330,000)

(Continued on next page)

Amount	Reason for Increase / Decrease
(Continued)	
+$955,000	Equipment and vehicle maintenance expense includes all costs necessary to support, maintain and repair OCFA's communications and information systems; its fleet of frontline and support vehicles and four helicopters; and various other equipment utilized throughout the organization. Expenses increased during Fiscal Year 2015/16 primarily due to support for the new Computer Aided Dispatch (CAD) system that went live in September 2014. OCFA was not required to begin paying annual support costs to the third party software provider until September 2015. Additional reasons for the increase to equipment and vehicle maintenance are further explained in the ***Major Governmental Funds – General Fund*** portion of this Management's Discussion and Analysis.
+$705,000	Clothing and personal supply expense includes all costs necessary to outfit frontline and support personnel, and includes items such as uniforms, boots, helmets, gloves, turnouts, brush pants and coats, goggles, fire hoods, and specialty personal protective equipment. Expenses increased during Fiscal Year 2015/16 due to a high volume of uniform orders submitted by field personnel, as well as an increase in the number of new firefighter recruits as compared to the prior fiscal year. A more detailed explanation is included in the ***Major Governmental Funds – General Fund*** portion of this Management's Discussion and Analysis.
-$500,000	OCFA's facilities include seventy-two fire stations, a new Urban Search and Rescue warehouse, and the Regional Fire Operations and Training Center (RFOTC). The total cost to keep these facilities repaired and in efficient operating condition decreased, primarily due to a significant grant-funded project to remodel four city-owned fire stations in the City of Santa Ana during Fiscal Year 2014/15. In the absence of that one-time project, building maintenance expenses actually increased by approximately $325,000. Maintenance costs varied by location, but overall OCFA's expenses increased due to repairs of flooring, doors and gates, roofing, and landscaping. In addition, during Fiscal Year 2015/16 there was an increase in non-capitalized costs needed to make new Fire Station No. 56 (Village of Sendero) ready for operations.
+$230,000	Reasons for increases and decreases to the following categories of services and supplies are further explained in the ***Major Governmental Funds – General Fund*** portion of this Management's Discussion and Analysis: transportation (-$350,000); special department expenses (+235,000); employee travel, training, and meetings (+$205,000); medical, dental, and lab supplies (+$190,000); insurance (-$80,000); food (+$75,000); and utilities and communications (-$45,000).
-$10,945,000	**Services and supplies – Net Decrease**

- Depreciation and amortization expense, which had no impact on OCFA's cash balances, increased by $217,787 (2.4%), and pertained primarily to depreciation on buildings. Fiscal Year 2015/16 was the first full year of depreciation expense for two significant building additions – the Urban Search and Rescue warehouse acquired in April 2015 and Fire Station No. 56 (Village of Sendero) placed into service in July 2015.

- Interest on long-term debt increased by $334,755 (57.5%) from the prior fiscal year. Interest expense on the 2008 helicopter lease purchase agreement decreased by approximately $60,000 as principal was paid down per the debt-to-maturity schedule. This was offset by an increase totaling approximately $400,000 for interest on Tax and Revenue Anticipation Notes (TRAN) issued during Fiscal Year 2015/16.

Financial Analysis of OCFA's Funds

Governmental Funds: As noted earlier, the OCFA uses fund accounting to ensure and demonstrate compliance with finance-related legal requirements. The focus of the OCFA's governmental funds is to provide information on near-term inflows, outflows, and balances of spendable resources. Such information is useful in assessing the OCFA's financing requirements. Fund balance is divided into the following five categories:

Category	Description
Nonspendable	Not in a spendable form, or legally or contractually required to remain intact
Restricted	Subject to externally enforceable legal restrictions
Committed	Use is constrained by specific limitations that the Board of Directors imposes upon itself
Assigned	Intended to be used by the government for specific purposes, as established by the governing body itself
Unassigned	Residual amounts in the General Fund available for any purpose (may serve as a useful measure of a government's net resources available for funding future operational needs)

At the end of Fiscal Year 2015/16, OCFA's governmental funds reported combined ending fund balances of $209,370,885, an increase of $32,481,099 in comparison with the prior fiscal year. Approximately 17.6% constitutes unassigned fund balance, which is available for spending for any purpose. The remaining 82.4% of fund balance is not available for spending on any new purpose, because it has already been restricted, committed, or assigned for specific purposes, or it is in a nonspendable form.

Fund Balances of Governmental Funds

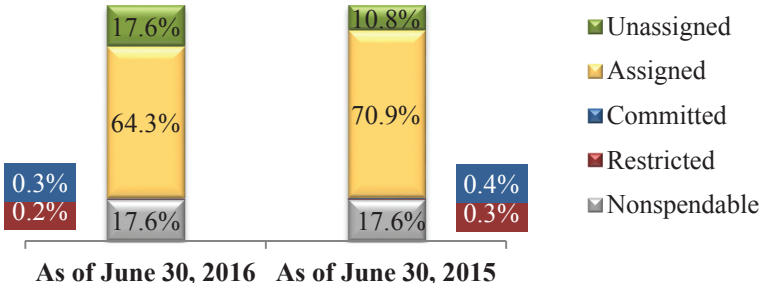

Major Governmental Funds: If the assets, liabilities, revenues, or expenditures of a governmental fund exceed 10% of the total of all governmental funds, that fund is reported as a major governmental fund in the fund financial statements. Because OCFA has elected to classify all of its governmental funds as major, regardless of the calculation, four major funds are reported during the current fiscal year. Following is a description of the changes in each fund's revenues, expenditures, and transfers from the prior to the current fiscal year, and how those changes impacted net fund balance. Increases to revenues and transfers impact fund balance positively, while increases to expenditures and transfers out impact fund balance negatively.

The ***General Fund*** is the chief operating fund of the OCFA. At the end of Fiscal Year 2015/16, the General Fund's fund balance totaled $153,057,705. Unassigned fund balance totaling $36,756,804 (24.0%) is available for future spending. The remaining $116,300,901 (76.0%) is not available for spending on any new purpose, because it has already been restricted, committed or assigned for specific purposes, or is in a nonspendable form.

Total fund balance of the OCFA's General Fund increased by $19,802,100 during the current fiscal year. The prior fiscal year's fund balance increased by $4,768,968, a difference of $15,033,132.

Impact on Fund Balance	Description
+$14,700,000	Revenue from property taxes increased primarily due to secured property taxes.
+$2,410,000	The most significant increase in intergovernmental revenue was state assistance by hire revenues for increased emergency response activity, including the Butte Fire in September 2015. Other increases included SB90 claims reimbursed from the State of California; contract revenues for the protection of State Responsibility Area (SRA); miscellaneous state and federal revenues; and tax increment passed through from member cities and the County of Orange. These increases totaled $3.2 million, but were offset by $800,000 in decreases relating to Fiscal Year 2014/15 federal assistance by hire emergency response activity and federal grants, including a Community Development Block Grant to remodel various Santa Ana fire station kitchens and bathrooms.
+$1,790,000	The most significant increases in charges for services were for operating and facilities charges to cash contract cities per terms of the Joint Powers Agreement and the Airport Rescue Firefighting (ARFF) Services contract with John Wayne Airport. These increases totaled nearly $2.8 million, but were offset by nearly $1 million in decreased revenues for ambulance transport and supplies reimbursements; permit and inspection fees; and contract work generated by the hand crew.
+$975,000	The increase in miscellaneous revenue was primarily due to amounts received from the Orange County Professional Firefighters Association IAFF Local 3631 in connection with OCFA's contract governing contributions to the firefighter medical trust, which pays monthly health care premiums for employees in the firefighter unit.
+$700,000	The most significant increases in use of money and property pertained to the premium for the Fiscal Year 2015/16 TRAN issuance (+$335,000). Other increases included investment portfolio earnings and the increase in market value investment gain allocated to the fund (+$330,000), as well as interest earnings related to property taxes (+$35,000).
+$20,575,000	***Subtotal – Impact of Revenues***
-$6,340,000	Overtime costs increased by over $6.3 million, which included non-discretionary backfill for open/vacant suppression positions; overtime and backfill for suppression personnel responding to emergency incidents; and backfill for suppression personnel on workers' compensation or those utilizing leave balances. The overall increase in overtime was attributed to a new Memorandum of Understanding (MOU) with the firefighter unit that went into effect in November 2014, which changed the way in which sick and vacation hours count toward hours work when calculating overtime. In addition, the number of emergency response hours increased by nearly 30,000 hours due to a higher volume of out-of-county incidents in Fiscal Year 2015/16.
+$4,840,000	Retirement costs had a net decrease due to one-time employer contributions made toward the net unfunded pension liability (-$5.9 million); pension contributions based on changes to employee compensation negotiated during Fiscal Year 2014/15, net of a decline in the annual savings achieved by pre-paying a portion of the subsequent fiscal year's contributions to OCERS (+$1.1 million); and additional payments made toward the unfunded pension liability during Fiscal Year 2014/15, which was achieved by carrying forward the higher safety member retirement rates from Fiscal Year 2012/13 (-$100,000). OCFA made one-time employer contributions toward the net unfunded pension liability totaling $21.3 million in Fiscal Year 2014/15, as compared to $15.4 million in Fiscal Year 2015/16.
-$2,840,000	An increase in regular pay was due primarily to labor contracts negotiated with the firefighter unit and the general and supervisory management unit during Fiscal Year 2014/15, which resulted in 2.0% and 2.75% base salary increases, respectively.
-$2,680,000	Employee health insurance and other benefits increased primarily due to firefighter health insurance premiums. Monthly rates per employee increased from $1,742 to $1,900 effective January 1, 2016.
-$1,720,000	Other pay – which includes pay to employees on workers' compensation, educational incentives, paramedic/EMT bonuses, bilingual pay, and other specialty pay – increased in the following areas: ***(Continued on next page)***

Impact on Fund Balance	Description
(Continued)	➢ Workers' compensation pay +$490,000 ➢ Paramedic specialty pay +$440,000 ➢ Special assignment pay for training officers +$225,000 ➢ Education incentives +$180,000 ➢ Bilingual pay +$115,000 ➢ Special assignment pay for hazmat specialists and technical rescue trucks +$100,000 ➢ Miscellaneous taxable pay +$90,000 ➢ Special assignment "on call" pay +$80,000 The number of employees on workers' compensation for all or a portion of the year increased from 179 in Fiscal Year 2014/15 to 206 in Fiscal Year 2015/16, attributing nearly $500,000 to the overall increase in other pay. Paramedic specialty pay, which is calculated at 15% of regular pay, was another significant contributor to the overall increase. This specialty pay increased by over $400,000 because of increases in employee compensation that were negotiated during Fiscal Year 2014/15, as well as various unit reconfigurations in 2015 and 2016 that increased the number of paramedic post positions.
+$315,000	Vacation and sick leave payouts decreased primarily due to the retirement of several long-term personnel during Fiscal Year 2014/15.
-$8,425,000	***Subtotal – Impact of Salaries and Benefits***
+$6,990,000	The decrease in miscellaneous expenditures relates primarily to equity payments due to the County of Orange and the cities of Irvine, Rancho Santa Margarita, Laguna Woods, and Lake Forest in Fiscal Year 2014/15 (+$7,005,000). These payments were made in the prior fiscal year in accordance with the 2nd Amendment to the Joint Powers Agreement, which was nullified by the appellate court during Fiscal Year 2015/16. No equity payments were paid or accrued in Fiscal Year 2015/16. In addition, the General Fund temporarily borrowed $10 million and $5 million during Fiscal Year 2015/16 and Fiscal Year 2014/15, respectively, resulting in an increase in interfund interest expenditures (-$15,000).
-$1,470,000	The most significant increase in professional services pertained to workers compensation claims paid, which increased by over $1.4 million in Fiscal Year 2015/16. Other increases related to the development of thirty-two wildland urban interface pre-fire plans, and the annual partnership costs paid for the 800 MHz Countywide-Coordinated Communications System (CCCS) replacement. These increases totaled approximately $1.7 million, but were partially offset by decreases for support and maintenance of the intranet/internet calendaring project that was completed in the prior fiscal year.
-$955,000	Equipment and vehicle maintenance was higher in Fiscal Year 2015/16 primarily due to support for the Computer Aided Dispatch (CAD) system. The new OCFA-wide CAD system went live in September 2014; however, annual support and maintenance costs were not required to be paid to the third party software provider for the first full year while in the initial warranty period. Other costs that were higher in Fiscal Year 2015/16 included outsourcing of various repairs for vehicles that were in accidents; replacement of vehicle tires; various equipment system repairs at the Regional Fire Operations and Training Center (RFOTC), including the HVAC system, fire sprinkler system, generator, and fuel pumps; and ongoing maintenance and upgrade support for the Banner financial system and database.
-$705,000	Clothing and personal supply costs increased primarily due to purchases of new uniforms and boots. In the prior fiscal year, many suppression personnel delayed replacing their uniforms in anticipation of a new uniform contract that was awarded in June 2015. Thus, a high volume of uniform orders were placed and filled in Fiscal Year 2015/16. In addition, new uniforms were purchased for firefighters in two academies held during Fiscal Year 2015/16, as opposed to only one academy held in the prior fiscal year. ***(Continued on next page)***

Impact on Fund Balance	Description
(Continued) **+$515,000**	Decreases in building maintenance were attributed primarily to certain significant Fiscal Year 2014/15 projects, including a grant-funded kitchen and bathroom remodel at four fire stations in the City of Santa Ana and a hardscape remodel project at Fire Station No. 8 (Skyline). These decreases totaled approximately $880,000, but were offset by increases in other maintenance costs at fire stations and the RFOTC for flooring; doors and gates; roofing; and landscaping.
+350,000	Transportation costs decreased due to an overall drop in fuel prices (+$350,000). Fiscal Year 2014/15 fuel prices averaged $2.84 and $2.93 per gallon for diesel and regular, respectively. Fiscal Year 2015/16 fuel prices were 15-28% lower with an average price of $2.04 and $2.48 per gallon for diesel and regular, respectively. The average price per gallon for jet fuel to replenish the helicopter fuel tank also decreased 15% from $3.09 per gallon in Fiscal Year 2014/15 to $2.64 per gallon in Fiscal Year 2015/16.
-$235,000	Increases in special department expenditures pertained primarily to the purchase of forty-three portable VHF radios, twelve mobile VHF radios, and related accessories during Fiscal Year 2015/16. Other significant costs in the current fiscal year included employee tuition reimbursements, supplies for the WEFIT health and wellness program, incident management team cache items, support of the drowning prevention task force, and various miscellaneous purchases made throughout the organization.
-$205,000	The cost of employee travel, training, and meetings increased primarily due to the new OCFA-wide "Crucial Conversations" program which began in Fiscal Year 2015/16. Other significant in-county costs included an S420 training class sponsored by the Urban Search and Rescue (USAR) task force, as well as on-site Banner financial system training for employees in Finance, Purchasing, Budget, and Human Resources. There was also an increase in the number of out-of-county trips completed by the Training & Safety Services section and those in the USAR program.
-$190,000	More medical, dental, and lab supplies were purchased in Fiscal Year 2015/16, including pharmaceuticals, catheters, defibrillator supplies, and needles. Purchases of these supplies vary each year as stock is replenished and expiring pharmaceuticals are replaced.
+$80,000	The cost of insurance premiums for excess workers' compensation and general liability coverage decreased during Fiscal Year 2015/16.
-$75,000	Food costs were higher in Fiscal Year 2015/16 due to the purchase of box lunches for significant in-county fire incidents, including the Laguna Fire in June 2016; replenishment of MRE stock ("meals-ready-to-eat"); new drip-drop hydration mix placed on all fire apparatus; and various food costs needed to conduct two firefighter academies as opposed to only one academy in the prior fiscal year.
+$45,000	A net decrease in utilities and communications charges was primarily due to declining electricity rates, offset by an increase in the monthly communications charges to operate all fax machines, phones, alarms, 911 boxes, and data circuits throughout OCFA.
+$4,145,000	***Subtotal – Impact of Services and Supplies***
+$80,000	Capital outlay varies each fiscal year based on organizational needs for new and replacement equipment. Significant equipment purchases in Fiscal Year 2014/15 included two servers, a helicopter hoist, seven extrication tools, a portable restroom facility, and twelve portable 800 MHz radios. The most significant purchases in Fiscal Year 2015/16 included three servers, thirteen mobile radios, six mobile vehicle lift systems, a compressor, three network switches, and four routers. In addition, the purchase and installation of various Code 3 equipment onto type 1 engines and Battalion Chief vehicles increased during Fiscal Year 2015/16.
-$400,000	Interest and fiscal charges increased due to the issuance of Tax and Revenue Anticipation Notes (TRAN). The coupon rate on the Fiscal Year 2015/16 TRAN issuance was 2.00%, as compared to 0.75% for the Fiscal Year 2014/15 TRAN. ***(Continued on next page)***
-$4,600,000	***Subtotal – Impact of Expenditures***

Impact on Fund Balance	Description
(Continued) **-$920,000**	Net interfund transfers increased and decreased as follows: ➢ Transfers are made from the General Fund to the capital projects funds to fund current and future projects in the Capital Improvement Program. Transfers from the General Fund to the Communications and Information Systems Fund decreased during Fiscal Year 2015/16 (+$2,925,000). ➢ When the *Capital Projects Fund Policy* was implemented in Fiscal Year 2014/15, certain projects within the Capital Improvement Program were moved from the Communications and Information Systems Fund and the Facilities Maintenance and Improvement Fund (now closed) to the General Fund, resulting in one-time transfers in to the General Fund during Fiscal Year 2014/15 (-$1,135,000 and -$2,710,000, respectively).
-$110,000	There was a decrease in the proceeds from sale of capital and other assets, primarily due to the sale of a dozer, a loader, a fire command bus, and a type 1 engine during Fiscal Year 2014/15.
+$90,000	Insurance recoveries increased in Fiscal Year 2015/16 due to property damage incurred at Fire Station No. 22 (Laguna Hills/Laguna Woods) and Fire Station No. 75 (Santa Ana), as well as an increase in the number of accidents involving OCFA vehicles.
-$940,000	***Subtotal – Impact of Other Financing Sources and Uses***
+$15,035,000	**General Fund – Net Impact on Fund Balance**

The ***Communications and Information Systems Fund*** had total fund balance of $19,002,272 at the end of Fiscal Year 2015/16. Fund balance was assigned to the Capital Improvement Program ($18,977,557) and communications and information technologies projects ($24,715). Total fund balance increased by $346,417 during the current fiscal year. The prior fiscal year's fund balance increased by $604,103, a difference of $257,686.

Impact on Fund Balance	Description
+$50,000	Revenues for use of money and property increased due to portfolio earnings and the market value investment gain allocated to the fund.
+$60,000	Miscellaneous revenues pertaining to bankruptcy proceeds increased during Fiscal Year 2015/16.
+$1,420,000	Expenditures for services and supplies and capital outlay had a net decrease primarily due to four significant, multi-year capital improvement projects as follows: ➢ The development of a new Computer Aided Dispatch (CAD) system began in Fiscal Year 2011/12 and was placed in service September 2014. Fiscal Year 2014/15 project costs included the final project milestones necessary to place the new system into service, including the acquisition of hardware and related warranty costs; system design; coding; data development (-$810,000). ➢ The Fire Station Alerting System project was a component of the overall CAD public safety system project. The project began in Fiscal Year 2013/14 and was placed in service July 2015. Fiscal Year 2014/15 project costs were higher than the current fiscal year since a significant number of project milestones were completed and costs were incurred at the peak of the project's activity, including hardware and software installation at various fire stations; a radio interface controller; installation of turnout timers; and system integration (-$625,000). ***(Continued on next page)***

Impact on Fund Balance	Description
(Continued)	➢ The Regional Fire Operations and Training Center (RFOTC) Audio Visual Upgrade project consists of the upgrade and replacement of various audio visual equipment used in the RFOTC board room and classroom one (Phase 1) and classrooms two through five (Phase 2). The project includes the purchase and installation of mixing boards, microphones, projectors, computers, controllers, and cabling; the addition of video teleconferencing capabilities; and an automated voting system for the board room. Phase 1 began in Fiscal Year 2015/16 and is expected to be completed during Fiscal Year 2016/17. Costs incurred thus far have included hardware acquisition and system design (+100,000). ➢ The MDC and Mobile Data Network Upgrade project consisted of the purchase of approximately 350 modems and their subsequent installation onto fire apparatus over the course of three fiscal years. Fiscal Year 2014/15 project costs included professional installation costs incurred for the final completion of the project (-$85,000).
-$1,790,000	Net transfers in and out of the General Fund funds decreased as follows: ➢ Transfers in from the General Fund for current and future projects in the Capital Improvement Program decreased by $2,925,000 over the amount transferred in the prior fiscal year. ➢ When a new *Capital Projects Fund Policy* was implemented in Fiscal Year 2014/15, certain projects within the Capital Improvement Program were moved from the Communications and Information Systems Fund to the General Fund, resulting in a corresponding increase in transfers out and a negative impact to balance in Fiscal Year 2014/15 totaling $1,135,000.
-$260,000	**Communications and Information Systems Fund – Net Impact on Fund Balance**

The ***Fire Apparatus Fund*** had total fund balance of $21,452,261 at the end of Fiscal Year 2015/16. Fund balance was assigned to the Capital Improvement Program ($14,788,654) and purchase of fire apparatus and vehicles ($6,663,607). Total fund balance decreased by $3,988,171 during the current fiscal year. The prior fiscal year's fund balance decreased by $4,056,449, a difference of $68,278.

Impact on Fund Balance	Description
+$40,000	Charges for services were for vehicle charges to cash contract cities, which increased in accordance with the terms of the Joint Powers Agreement.
+$40,000	Revenues for use of money and property increased due to portfolio earnings and the market value investment gain allocated to the fund.
+$40,000	Miscellaneous revenues pertaining to bankruptcy proceeds increased during Fiscal Year 2015/16.
-$525,000	Developer contribution revenue decreased due to a Fiscal Year 2014/15 reimbursement from Rancho Mission Viejo Community Development for the type 1 engine to be placed into service at new Fire Station No. 56 (Village of Sendero).
+$475,000	Capital outlay expenditures to purchase and outfit vehicles vary each fiscal year based on organizational needs for new and replacement vehicles. Expenditures were higher in Fiscal Year 2014/15 due to the purchase of five type 1 engines, nineteen sport utility vehicles (Tahoes and Suburbans), four mail delivery box trucks, and a compact track loader. Significant purchases in Fiscal Year 2015/16 have included four type 1 engines, six sport utility vehicles (Executive Management), seventeen pickup trucks (Colorados), and one brush chipper.
+$70,000	**Fire Apparatus Fund – Net Impact on Fund Balance**

The ***Fire Stations and Facilities Fund*** had total fund balance of $15,858,647 at the end of Fiscal Year 2015/16. Amounts pertaining to CALFIRE revenues received for future fire station construction ($533,232) were classified as restricted. Remaining amounts were assigned to the Capital Improvement Program ($15,312,280) and construction projects ($13,135).

Total fund balance increased by $3,338,405 during the current fiscal year. The prior fiscal year's fund balance decreased by $2,889,645, a difference of $6,228,050.

Impact on Fund Balance	Description
+$30,000	Revenues for use of money and property increased due to portfolio earnings and the market value investment gain allocated to the fund (+$15,000). In addition, the General Fund temporarily borrowed $10 million and $5 million during Fiscal Year 2015/16 and Fiscal Year 2014/15, respectively, resulting in an increase in interfund interest earnings (+$15,000).
+$30,000	Miscellaneous revenues pertaining to bankruptcy proceeds increased during Fiscal Year 2015/16.
-$4,550,000	Developer contribution revenue generated by Secured Fire Protection Agreements with developers vary each fiscal year based on housing development projects being completed throughout the county. During Fiscal Year 2014/15, OCFA received over $4 million from various developers as reimbursement for construction of new Fire Station No. 56 (Village of Sendero) in Rancho Mission Viejo. In addition, $3.1 million was received from Heritage Fields El Toro LLC related to development at the Great Park in the City of Irvine, as compared to nearly $1.1 million received for the same project in Fiscal Year 2015/16. Other Fiscal Year 2015/16 developer contributions included over $1.4 million for projects at Baker Ranch, Elements Site 1 Apartments, and Gateway Apartments in the City of Irvine.
+$10,720,000	Capital outlay expenditures increased primarily due to the purchase of a centralized Urban Search and Rescue (USAR) warehouse during Fiscal Year 2014/15 at a cost of over $6.2 million, as well as approximately $4.6 million toward the multi-year construction project to build new Fire Station No. 56 (Village of Sendero). During Fiscal Year 2015/16, approximately $100,000 was spent on various tenant improvement projects necessary to convert the warehouse into a fully-functioning USAR facility.
+$6,230,000	**Fire Stations and Facilities Fund – Net Impact on Fund Balance**

General Fund Budgetary Highlights

The following table summarizes the changes in General Fund appropriations, as well as the variance between the final budget and actual amounts for Fiscal Year 2015/16.

	Original Budget	Increase (Decrease)	Final Budget	Variance Positive (Negative)	Actual Amounts
Salaries and benefits	$277,424,610	$19,523,220	$296,947,830	$ 2,533,746	$294,414,084
Services and supplies	43,999,102	(4,353,564)	39,645,538	3,480,446	36,165,092
Capital outlay	4,276,504	378,236	4,654,740	4,031,834	622,906
Interest and fiscal charges	318,050	436,386	754,436	13,999	740,437
Transfers out	2,127,821	(2,049,634)	78,187	-	78,187
	$328,146,087	$13,934,644	$342,080,731	$10,060,025	$332,020,706

Adjustments to Appropriations: Budgeted General Fund appropriations increased by $13,934,644 from the time the original budget was adopted until the end of the fiscal year. Adjustments typically pertained to

activities that occurred throughout the year but were either unknown or for which reliable estimates could not be determined at the time of the original budget adoption. Significant adjustments are listed below:

Reason for Adjustment to Original Budget	Increase (Decrease)
One-time contribution toward unfunded pension liability	$12,610,000
Jurisdictional equity adjustment payments	(7,880,000)
Overtime and backfill for response to out-of-county incidents	5,550,000
Grant activities	2,545,000
Transfers to Capital Improvement Program (CIP)	(2,050,000)
Operations Department salary savings	(1,000,000)
Staffing changes, reconfigurations, and service enhancements	750,000
Information Technology Division maintenance and support	615,000
Facilities maintenance	540,000
Interest on Tax and Revenue Anticipation Notes (TRAN) and interfund borrowing	435,000
Donations received	410,000
Various professional services	395,000
New hazmat specialist and tech rescue truck bonus pays	330,000
Outfitting four type one engines and four 100' tractor drawn aerials	300,000
Structural fire entitlement projects	85,000
Service Center equipment	80,000
Information Technology Division CIP projects	70,000
El Niño sand and other supplies	60,000
Urban Search and Rescue warehouse operating costs	40,000
Various other appropriations	50,000
Total adjustments	**$13,935,000**

Variance Between Final Budget and Actual Amounts: Final budgeted General Fund expenditures exceeded actual amounts, resulting in a positive budget variance totaling $10,060,025.

- The $2.5 million positive variance in salaries and benefits is attributed primarily to staff vacancies throughout the organization as follows:

Department	Amount
Operations	$ 970,000
Support Services	435,000
Business Services	390,000
Community Risk Reduction	390,000
Organizational Planning	235,000
Executive Management	115,000
Total variance	**$2,535,000**

- The $3.5 million net positive variance in services and supplies is primarily attributed to the following:

  - Approximately $3.7 million in various operating costs, projects, and other purchases of services and supplies were budgeted but not completed during Fiscal Year 2015/16. These uncompleted projects are typically delayed due to project complexity or time requirements and will be re-budgeted, if needed, to

Fiscal Year 2016/17. The majority of savings from Fiscal Year 2015/16 were created by uncompleted Information Technology Division (IT) operating costs and projects from the Capital Improvement Program (CIP), including projects that involved the installation of communications equipment on fire apparatus and other professional programming services.

- The amount budgeted for workers' compensation is based on an actuarially-determined estimate. Actual expenditures for workers' compensation cases typically occur over multiple years, which often attributes to a difference between budgeted costs and actual expenditures during any given fiscal year. During Fiscal Year 2015/16, actual claims paid from the General Fund were $200,000 more than the actuarial estimate, creating a negative budget variance.

- The $4.0 million positive variance in capital outlay is primarily attributed to the following:
  - A project to replace approximately 120 frontline cardiac monitors and 150 defibrillators was budgeted during Fiscal Year 2015/16 for $3.8 million. OCFA was in the bid process at the close of the fiscal year and, once completed, a contract is expected to be awarded and the purchase completed during Fiscal Year 2016/17. It is anticipated that these expenditure savings will be re-budgeted, as needed, to Fiscal Year 2016/17.
  - Approximately $200,000 in Urban Search and Rescue (USAR) equipment items were budgeted but not purchased during Fiscal Year 2015/16, including defibrillators and monitors, a box truck modification, and a database management program. These grant-funded projects will either be modified via the grant approval process or re-budgeted, as needed, to Fiscal Year 2016/17.

Capital Assets and Debt Administration

Capital Assets: OCFA's investment in capital assets for its government activities at the end of Fiscal Year 2015/16 totaled $187,910,677 (net of accumulated depreciation and amortization and related outstanding debt). This investment in capital assets includes land, buildings, equipment, vehicles, work in progress and construction in progress. Net capital assets decreased from the prior fiscal year by $2,889,439 (1.5%). Following is a summary of net capital assets by type for the current and prior fiscal years.

Capital Assets, Net of Accumulated Depreciation and Amortization
As of June 30, 2016 and 2015
(In Millions)

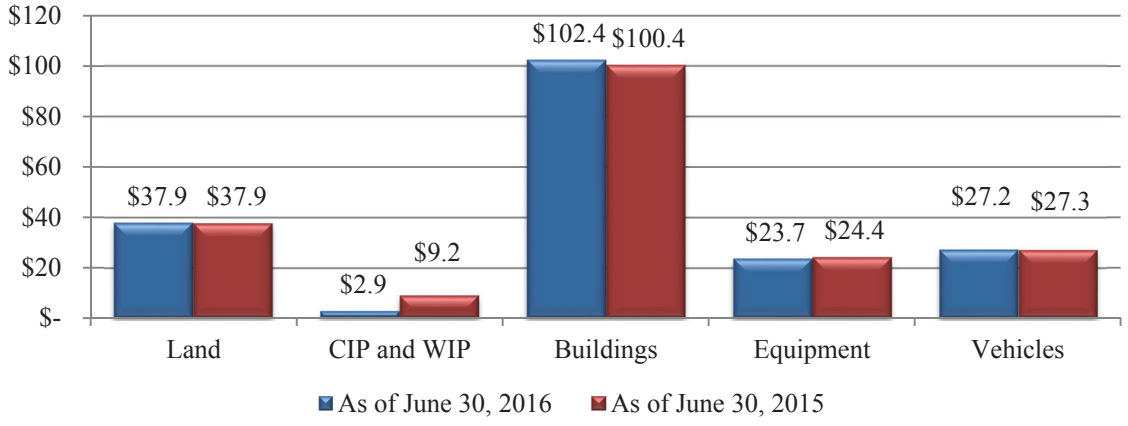

Major capital asset additions during Fiscal Year 2015/16 included the following:

- Construction in progress (CIP) and work in progress (WIP) accounted for forty-eight projects during Fiscal Year 2015/16, twenty of which were placed into service and twenty-eight of which were still in progress at year-end.

    - Construction projects completed over the span of multiple fiscal years are classified as CIP at year-end if they are not yet completed and placed into service. Additions totaling $100,000 included various tenant improvements at the Urban Search and Rescue warehouse in Foothill Ranch; permits for a dormitory remodel project at Fire Station No. 41 (Fullerton Airport); and permits for a generator upgrade project at the Regional Fire Operations and Training Center (RFOTC). Those three projects were still in progress at fiscal year-end, with work expected to be completed during Fiscal Year 2016/17.

    - Fire engines, trucks, and other vehicles, are classified as WIP at year-end if they are in the process of being outfitted for operation and will be completed over the span of multiple fiscal years. WIP also includes multi-year communications and information systems projects. WIP additions totaled over $2.7 million during Fiscal Year 2015/16, including costs pertaining to eight type one engines ($2.2 million); fifteen Chevrolet Colorado pickup trucks ($300,000); six front-line Chevrolet Suburban sport utility vehicles ($100,000); thirteen front-line Chevrolet Tahoe sport utility vehicles ($100,000); the Fire Station Alerting System ($40,000); and a winch installed on Heavy Rescue 6 ($10,000). Four type one engines, thirteen Chevrolet Tahoes, the Fire Station Alerting System, and the heavy rescue winch were all placed into service during the fiscal year, while the remaining projects were still in process as of June 30, 2016.

- Fiscal Year 2015/16 building additions consisted of $5.1 million for new Fire Station No. 56 (Village of Sendero) in Rancho Mission Viejo, which was transferred from CIP and placed into service in July 2015.

- Equipment additions during Fiscal Year 2015/16 totaling $1.9 million consisted of $600,000 in new purchases, plus $1.3 million of completed, multi-year projects transferred in from WIP. The most individually significant additions included the Fire Station Alerting System (cumulative $1.3 million); three servers ($200,000); sixteen mobile radios ($85,000); and six mobile vehicle lift systems ($60,000).

- Vehicle additions during Fiscal Year 2015/16 totaling $3.3 million consisted of $600,000 in new purchases, plus $2.7 million of completed vehicles transferred in from WIP. The most individually significant additions included four type one engines ($2.1 million); thirteen front-line sport utility vehicles ($600,000); six sport utility vehicles utilized by Executive Management ($300,000); ten pickup trucks assigned to Community Risk Reduction and Fleet Services ($250,000); and one brush chipper ($70,000).

Major capital asset deletions during Fiscal Year 2015/16 included the following:

- Thirteen capital equipment items were sold, scrapped, or written off during Fiscal Year 2015/16, including seven thermal imaging cameras ($70,000); one compressor ($30,000); two mobile radios ($15,000); one laptop ($5,000); one portable radio ($5,000); and one software license ($5,000). The net book value of all equipment disposals was approximately $10,000, as most items had reached the end of their useful service lives and were either fully or mostly depreciated. Most equipment was written off as obsolete during the annual physical inventory process. Other items were traded in to a vendor upon purchase of a replacement item, converted into training props, or accidentally damaged beyond repair.

- Seven vehicles were removed from OCFA's fleet during Fiscal Year 2015/16 as part of OCFA's ongoing vehicle replacement plan. The net book value of all vehicle disposals was $0, as all items had reached the end of their useful service lives and were fully depreciated. Four sport utility vehicles ($150,000) and two sedans ($50,000) were sold at public auction. One sport utility vehicle ($20,000) was written off as a total loss due to a vehicle accident that occurred during the fiscal year.

Additional information pertaining to the OCFA's capital assets can be found in Note 15 of the accompanying Notes to the Financial Statements.

Long-term Debt: Total long-term liabilities increased by net $56,925,869 (9.3%) during Fiscal Year 2015/16.

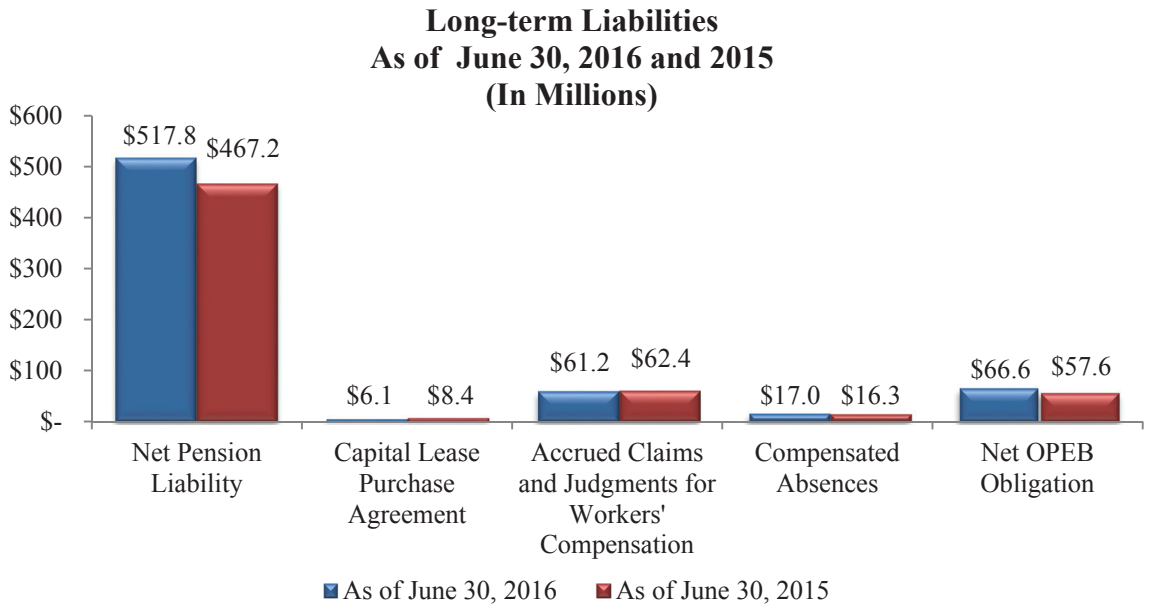

The most significant increases and decreases to long-term liabilities pertained to the net pension liability for the Orange County Employees Retirement System (OCERS) pension plan, which is being reported in the financial statements as a long-term liability for the first time in conjunction with the implementation of Governmental Accounting Standards Board (GASB) Statement No. 68. During Fiscal Year 2015/16, OCFA's share of the plan's net pension liability, as determined by an actuarial valuation for the plan as a whole, increased by $133.4 million. This addition was offset by $82.7 million in actual employer and employee contributions remitted by OCFA to the plan. The increases and decreases reported for the long-term pension liability are reported using an "accounting-based approach" in order to fully capture OCFA's net liability and related pension expense incurred during each fiscal year. This differs from the "funding-based approach" used to calculate annual retirement rates and the amount of required employer and employee contributions due from OCFA to OCERS.

Additional information on the OCFA's long-term liabilities can be found in Note 16 of the accompanying Notes to the Financial Statements.

Next Year's Budget

The Fiscal Year 2016/17 General Operating Fund adopted expenditure budget is approximately $323.2 million, which is a net increase of $5.8 million (1.8%) from the final Fiscal Year 2015/16 General Operating Fund budget totaling $317.4 million. (These amounts exclude one-time and grant-related items, as well as unspent, encumbered appropriations from the prior fiscal year that are effectually re-appropriated in the ensuing year's budget). Highlights of the Fiscal Year 2016/17 General Operating Fund Budget are as follow:

- Budgeted salaries and benefits increased by $3.7 million. The budget reflects annual costs in accordance with approved Memorandums of Understanding with each labor group. The retirement budget for Fiscal Year 2016/17 is based on rates provided by the Orange County Employees Retirement System (OCERS). For Fiscal Year 2016/17, those rates are approximately 1.1% higher for safety personnel and 3.8% lower for non-safety personnel.

- Budgeted services and supplies, capital outlay, and debt service increased by $1.3 million. Overall, budgets were held flat as compared to Fiscal Year 2015/16, unless specific increases were identified by OCFA management or one-time grant proceeds were received. In general, the base Fiscal Year 2016/17 budget excluded one-time, grant-related, and assistance by hire expenditures at the time of adoption, as these projects will be budgeted as-needed throughout the upcoming fiscal year.

- The total number of authorized positions in the Fiscal Year 2016/17 budget is 1,363, which is the same as the final, authorized position list as of June 30, 2016. However, the budget reflects funding for only 1,284 of those authorized positions, since frozen vacancies, grant-funded, and limited term positions are not included at the time the original budget is adopted. Changes in authorized positions by unit are summarized as follows:

Unit	FY 2016/17 Budget	FY 2015/16 Final	Increase (Decrease)
Firefighter Unit	1,023	1,023	-
Fire Management Unit	45	45	-
General Unit	213	213	-
Supervisory Management Unit	27	27	-
Supported Employment Unit	4	4	-
Administrative Management	43	43	-
Executive Management	8	8	-
Total authorized positions	**1,363**	**1,363**	**-**

Requests for Information

This financial report is designed to provide a general overview of OCFA's finances for all those with an interest in the government's finances. Questions concerning any of the information provided in this report or requests for additional financial information should be addressed to the Finance Manager/Auditor, Orange County Fire Authority, 1 Fire Authority Road, Irvine, California 92602.

This Page Intentionally Left Blank

ORANGE COUNTY FIRE AUTHORITY
Statement of Net Position
June 30, 2016
(With Comparative Data for Prior Year)

	Primary Government		Component Unit	
	Governmental Activities		OCFA Foundation	
	2016	2015	2016	2015
Assets:				
Cash and investments (Note 4)	$ 177,729,367	$ 164,787,506	$ 108,718	$ 108,720
Receivables:				
Accounts, net (Note 5)	2,566,770	3,976,952	90	-
Accrued interest	224,075	96,621	-	-
Prepaid costs and other assets	36,789,256	31,160,094	7,015	723
Due from other governments, net (Note 6)	11,671,971	8,702,777	-	-
Capital assets (Note 15):				
Land	37,887,850	37,887,850	-	-
Construction in progress	102,341	5,092,288	-	-
Work in progress	2,795,704	4,121,289	-	-
Capital assets, net of accumulated depreciation/amortization	153,235,229	152,145,415	-	-
Total Assets	**423,002,563**	**407,970,792**	**115,823**	**109,443**
Deferred Outflows of Resources:				
Deferred outflows of resources related to pensions (Note 16b)	139,040,544	85,763,924	-	-
Total Deferred Outflows of Resources	**139,040,544**	**85,763,924**	**-**	**-**
Liabilities:				
Accounts payable	3,008,616	3,602,338	142	4,529
Accrued liabilities	14,824,059	12,828,886	-	-
Accrued interest	3,427	4,737	-	-
Unearned revenue (Note 8)	33,116	3,278,818	6,000	-
Due to other governments (Note 7)	123,047	10,072,547	-	-
Long-term liabilities (Note 16a):				
Other due within one year	13,377,381	12,512,349	-	-
Other due in more than one year	70,948,919	74,603,168	-	-
Proportionate share net pension liability	517,833,497	467,208,681	-	-
Net OPEB obligation	66,643,396	57,553,126	-	-
Total Liabilities	**686,795,458**	**641,664,650**	**6,142**	**4,529**
Deferred Inflows of Resources:				
Deferred inflows of resources related to pensions (Note 16b)	35,911,567	21,194,439	-	-
Total Deferred Outflows of Resources	**35,911,567**	**21,194,439**	**-**	**-**
Net position:				
Net investment in capital assets (Note 15b)	187,910,677	190,800,116	-	-
Restricted for (Note 10):				
Capital projects	533,232	533,232	-	-
Other purposes	13,867	55,538	47,448	52,583
Unrestricted	(349,121,694)	(360,513,259)	62,233	52,331
Total Net Position	**$ (160,663,918)**	**$ (169,124,373)**	**$ 109,681**	**$ 104,914**

See Notes to the Financial Statements

This Page Intentionally Left Blank

ORANGE COUNTY FIRE AUTHORITY
Statement of Activities
Year ended June 30, 2016
(With Comparative Data for Prior Year)

	Primary Government		Component Unit	
	Governmental Activities		OCFA Foundation	
	2016	2015	2016	2015
Expenses:				
Public safety:				
Salaries and benefits	$ 316,292,785	$ 335,419,737	$ -	$ -
Services and supplies	35,127,573	46,073,201	65,230	61,633
Depreciation and amortization (Note 15d)	9,267,982	9,050,195	-	-
Interest on long-term debt	917,320	582,565	-	-
Total Program Expenses	**361,605,660**	**391,125,698**	**65,230**	**61,633**
Program Revenues:				
Public safety:				
Charges for services	117,263,679	113,150,325	-	-
Operating grants and contributions	12,165,015	11,410,019	69,997	62,038
Capital grants and contributions	3,331,088	9,182,195	-	-
Total Program Revenues	**132,759,782**	**133,742,539**	**69,997**	**62,038**
Net program (expenses) revenues	(228,845,878)	(257,383,159)	4,767	405
General Revenues:				
Property taxes	219,840,417	205,141,237	-	-
Investment income	1,654,065	839,864	-	-
Gain on sale of capital assets	6,000	63,953	-	-
Miscellaneous	2,823,503	1,235,004	-	-
Total General Revenues	**224,323,985**	**207,280,058**	**-**	**-**
Change in net position	(4,521,893)	(50,103,101)	4,767	405
Net position at beginning of year, as restated (Note 3)	(156,142,025)	(119,021,272)	104,914	104,509
Net Position at End of Year	**$ (160,663,918)**	**$ (169,124,373)**	**$ 109,681**	**$ 104,914**

See Notes to the Financial Statements

ORANGE COUNTY FIRE AUTHORITY
Governmental Funds
Balance Sheet
June 30, 2016
(With Comparative Data for Prior Year)

	General Fund	Capital Communications and Information Systems
Assets:		
Cash and investments (Note 4)	$ 121,350,414	$ 19,105,606
Receivables:		
Accounts, net (Note 5)	2,442,570	-
Accrued interest	125,706	21,253
Prepaid costs and other assets	36,789,256	-
Due from other governments, net (Note 6)	10,050,255	-
Total Assets	**$ 170,758,201**	**$ 19,126,859**
Liabilities:		
Accounts payable	$ 2,720,274	$ 124,587
Accrued liabilities	14,824,059	-
Unearned revenue (Note 8)	33,116	-
Due to other governments (Note 7)	123,047	-
Total Liabilities	**17,700,496**	**124,587**
Deferred Inflows of Resources:		
Unavailable revenue	-	-
Total Deferred Inflows of Resources	**-**	**-**
Fund Balances:		
Nonspendable - prepaid costs (Note 9)	36,779,845	-
Restricted for (Note 10):		
Capital improvement program	-	-
Operations Department	13,867	-
Committed to - SFF cities enhancements (Note 11)	584,464	-
Assigned to (Note 12):		
Capital improvement program	4,668,314	18,977,557
Workers' compensation	73,720,054	-
Executive Management	36,690	-
Operations Department	51,484	-
Community Risk Reduction Department	15,845	-
Business Services Department	162,699	-
Support Services Department	119,743	-
Organizational Planning Department	21,000	-
Facilities projects	69,987	-
Communications and IT projects	56,909	24,715
Fire apparatus and other vehicles	-	-
Construction projects	-	-
Unassigned (Note 13)	36,756,804	-
Total Fund Balances	**153,057,705**	**19,002,272**
Total Liabilities, Deferred Inflows of Resources, and Fund Balances	**$ 170,758,201**	**$ 19,126,859**

See Notes to the Financial Statements

Project Funds		Total Governmental Funds	
Fire Apparatus	**Fire Stations and Facilities**	**2016**	**2015**
$ 21,518,136	$ 15,755,211	$ 177,729,367	$ 164,787,506
-	124,200	2,566,770	3,976,952
14,835	62,281	224,075	96,621
-	-	36,789,256	31,160,094
-	-	10,050,255	6,967,289
$ 21,532,971	**$ 15,941,692**	**$ 227,359,723**	**$ 206,988,462**
$ 80,710	$ 83,045	$ 3,008,616	$ 3,602,338
-	-	14,824,059	12,828,886
-	-	33,116	3,278,818
-	-	123,047	10,072,547
80,710	**83,045**	**17,988,838**	**29,782,589**
-	-	-	316,087
-	**-**	**-**	**316,087**
-	-	36,779,845	31,160,094
-	533,232	533,232	533,232
-	-	13,867	55,538
-	-	584,464	691,265
14,788,654	15,312,280	53,746,805	48,158,215
-	-	73,720,054	68,494,796
-	-	36,690	98,415
-	-	51,484	46,859
-	-	15,845	354
-	-	162,699	66,963
-	-	119,743	207,784
-	-	21,000	33,890
-	-	69,987	52,061
-	-	81,624	143,061
6,663,607	-	6,663,607	8,030,783
-	13,135	13,135	-
-	-	36,756,804	19,116,476
21,452,261	**15,858,647**	**209,370,885**	**176,889,786**
$ 21,532,971	**$ 15,941,692**	**$ 227,359,723**	**$ 206,988,462**

ORANGE COUNTY FIRE AUTHORITY
Reconciliation of the Balance Sheet of Governmental Funds to the Statement of Net Position
June 30, 2016
(With Comparative Data for Prior Year)

	2016	2015
Fund balances of governmental funds	**$ 209,370,885**	**$ 176,889,786**
Capital Assets		
When capital assets that are to be used in governmental activities are purchased or constructed, their costs are recorded as expenditures in governmental funds. However, the Statement of Net Position includes those capital assets among the assets of the OCFA as a whole, net of accumulated depreciation/amortization.		
Capital assets	318,064,366	314,353,552
Accumulated depreciation/amortization	(124,043,242)	(115,106,710)
Long-term Liabilities and Receivables		
Long-term liabilities applicable to governmental activities are not due and payable in the current period and, accordingly, are not reported as governmental fund liabilities. A portion of OCFA's long-term liability for compensated absences is reimbursable by the City of Santa Ana, and therefore offset by a long-term receivable. Long-term receivables are not available to fund the activities of the current period, and are likewise not reported as governmental fund assets. All assets and liabilities, both current and long-term, are reported in the Statement of Net Position.		
OCERS pension plan:		
Net pension liability	(517,669,806)	(466,968,323)
Deferred outflows of resources	139,005,504	85,761,443
Deferred inflows of resources	(35,819,433)	(21,185,872)
Extra Help pension plan:		
Net pension liability	(163,691)	(240,358)
Deferred outflows of resources	35,040	2,481
Deferred inflows of resources	(92,134)	(8,567)

ORANGE COUNTY FIRE AUTHORITY
Reconciliation of the Balance Sheet of Governmental Funds to the Statement of Net Position
(Continued)

	2016	2015
Long-term Liabilities and Receivables, (Continued)		
Capital lease purchase agreements	(6,110,447)	(8,446,726)
Accrued claims and judgments	(61,196,645)	(62,372,690)
Compensated absences	(17,019,208)	(16,296,101)
Long-term receivable for compensated absences	1,621,716	1,735,488
Net OPEB obligation	(66,643,396)	(57,553,126)
Accrued Interest		
Accrued interest payable for the current portion of interest due on long-term liabilities has not been reported in the governmental funds. Accrued interest was calculated and reported in the Statement of Net Position.	(3,427)	(4,737)
Unavailable Revenues		
Unavailable revenues are reported in the governmental funds if not collected or expected to be collected within the OCFA's availability period. However, amounts relating to unavailable revenues are not reported in the Statement of Net Position since revenue recognition is not based upon measurable and available criteria.		
Due from other governments - Santa Ana start-up costs	-	316,087
Net position of governmental activities	**$ (160,663,918)**	**$ (169,124,373)**

See Notes to the Financial Statements

ORANGE COUNTY FIRE AUTHORITY
Governmental Funds
Statement of Revenues, Expenditures and Changes in Fund Balances
Year ended June 30, 2016
(With Comparative Data for Prior Year)

		Capital
	General Fund	**Communications and Information Systems**
Revenues:		
Taxes	$ 219,840,417	$ -
Intergovernmental	25,978,081	-
Charges for services	102,408,896	-
Use of money and property	1,353,083	111,865
Miscellaneous	2,096,571	312,605
Developer contributions	-	-
Total revenues	**351,677,048**	**424,470**
Expenditures:		
Current - public safety:		
Salaries and benefits	294,414,084	-
Services and supplies	36,165,092	84,845
Capital outlay	622,906	71,395
Debt service:		
Principal retirement	-	-
Interest and fiscal charges	740,437	-
Total expenditures	**331,942,519**	**156,240**
Excess (deficiency) of revenues over (under) expenditures	19,734,529	268,230
Other financing sources (uses):		
Transfers in (Note 14)	-	78,187
Transfers out (Note 14)	(78,187)	-
Sale of capital and other assets	24,470	-
Insurance recoveries	121,288	-
Total other financing sources (uses)	**67,571**	**78,187**
Net change in fund balances	19,802,100	346,417
Fund balances, beginning of year, as restated (Note 3)	133,255,605	18,655,855
Fund balances, end of year	**$ 153,057,705**	**$ 19,002,272**

See Notes to the Financial Statements

Project Funds		Total Governmental Funds	
Fire Apparatus	**Fire Stations and Facilities**	**2016**	**2015**
$ -	$ -	$ 219,840,417	$ 205,141,237
-	-	25,978,081	23,565,214
1,421,540	-	103,830,436	102,000,677
131,954	74,414	1,671,316	841,522
191,832	185,165	2,786,173	1,679,976
-	3,233,082	3,233,082	8,307,207
1,745,326	**3,492,661**	**357,339,505**	**341,535,833**
-	-	294,414,084	285,988,997
248	53,433	36,303,618	40,490,370
3,201,526	100,823	3,996,650	16,644,798
2,336,279	-	2,336,279	2,276,963
195,444	-	935,881	585,501
5,733,497	**154,256**	**337,986,512**	**345,986,629**
(3,988,171)	3,338,405	19,352,993	(4,450,796)
-	-	78,187	6,845,320
-	-	(78,187)	(6,845,320)
-	-	24,470	134,123
-	-	121,288	32,948
-	**-**	**145,758**	**167,071**
(3,988,171)	3,338,405	19,498,751	(4,283,725)
25,440,432	12,520,242	189,872,134	181,173,511
$ 21,452,261	**$ 15,858,647**	**$ 209,370,885**	**$ 176,889,786**

ORANGE COUNTY FIRE AUTHORITY
Reconciliation of the Statement of Revenues, Expenditures and Changes in Fund Balances of Governmental Funds to the Statement of Activities
Year ended June 30, 2016
(With Comparative Data for Prior Year)

	2016	2015
Net change in fund balances - total governmental funds	**$ 19,498,751**	**$ (4,283,725)**
Capital Assets		
Governmental funds report capital outlays as expenditures. In the Statement of Activities, the cost of those assets is allocated over their estimated useful lives as depreciation/amortization expense.		
Capital outlay	3,996,650	16,644,798
Capitalized labor, included in salaries and benefits	-	23,975
Depreciation/amortization expense	(9,267,982)	(9,050,195)
Capital assets received through grant or donation are recognized as revenue in the Statement of Activities at their estimated fair value at time of receipt.		
From OCFA Foundation	10,000	-
From other grantors and donors	44,984	37,736
Governmental funds report the proceeds from sale of capital and other assets as other financing sources. In the Statement of Activities, those proceeds are offset by the net book value of the asset, resulting in a gain or loss on the sale.		
Capital asset disposals	(340,820)	(3,856,195)
Accumulated depreciation/amortization on disposals	331,450	3,805,380
Long-term Liabilities and Receivables		
Repayment of long-term debt principal on the capital lease purchase agreements is reported as an expenditure in governmental funds. Principal payments reduce the long-term liability in the Statement of Net Position and do not result in an expense in the Statement of Activities.	2,336,279	2,276,963
Other long-term liabilities are reported in the Statement of Net Position. The net annual change in the liability is recognized as an expense in the Statement of Activities. Long-term liabilities do not require the use of current financial resources and are not reported as expenditures in the governmental funds.		
OCERS pension plan	(12,090,983)	(39,860,404)
Extra Help pension plan	25,659	(2,905)
Accrued claims and judgments - workers' compensation	1,176,045	(5,582,831)

ORANGE COUNTY FIRE AUTHORITY
Reconciliation of the Statement of Revenues, Expenditures and Changes in Fund Balances of Governmental Funds to the Statement of Activities
(Continued)

	2016	2015
Compensated absences - Santa Ana general leave	113,772	(18,482)
Compensated absences - other leave balances	(836,879)	(105,115)
A long-term receivable has been established in the Statement of Net Position for the portion of compensated absences reimbursable by the City of Santa Ana. The receivable balance is reduced over time as leave balances are used by employees and subsequently reimbursed by the city. Those reimbursements are reported as revenue in the governmental funds.	(113,772)	18,482
Contributions to the defined benefit retiree medical plan are made on a pay-as-you-go basis in the governmental fund financial statements. If actual contributions are less than the actuarially-determined required amount, the difference is reported as an expense in the Statement of Activities.	(9,090,270)	(9,467,809)
Accrued Interest		
Interest expenditures are reported when paid in the governmental funds, while the net change in accrued interest incurred for the period is recognized as interest expense in the Statement of Activities.	1,310	1,278
Unavailable Revenues		
Certain receivables and grants that have been accrued but not collected are reflected as unavailable revenue in the governmental funds. All earned revenue is recognized in the Statement of Activities regardless of when collected.		
Intergovernmental revenue - property tax increment	-	(367,964)
Charges for services - Santa Ana start-up costs	(316,087)	(316,088)
Interfund Transactions		
Transactions between governmental funds are eliminated for presentation in the government-wide financial statements.		
Transfers in	(78,187)	(6,845,320)
Transfers out	78,187	6,845,320
Use of money and property	(17,251)	(1,658)
Interest and fiscal charges	17,251	1,658
Change in net position of governmental activities	**$ (4,521,893)**	**$ (50,103,101)**

See Notes to the Financial Statements

ORANGE COUNTY FIRE AUTHORITY
General Fund
Budgetary Comparison Statement
Year ended June 30, 2016
(With Comparative Data for Prior Year)

	2016				2015
	Budget Amounts		Actual	Variance with Final Budget Positive	Actual
	Original	Final	Amounts	(Negative)	Amounts
Budgetary fund balance, July 1, as restated	**$ 133,255,605**	**$ 133,255,605**	**$ 133,255,605**	**$ -**	**$ 115,504,289**
Resources (inflows):					
Taxes	214,445,545	218,156,295	219,840,417	1,684,122	205,141,237
Intergovernmental	14,942,177	23,926,860	25,978,081	2,051,221	23,565,214
Charges for services	101,969,304	101,173,891	102,408,896	1,235,005	100,619,516
Use of money and property	1,558,531	1,008,421	1,353,083	344,662	651,975
Miscellaneous	1,008,733	2,203,027	2,096,571	(106,456)	1,120,697
Transfers in	-	-	-	-	3,844,414
Sale of capital and other assets	50,000	50,480	24,470	(26,010)	134,123
Insurance recoveries	-	79,433	121,288	41,855	32,948
Total resources (inflows)	**333,974,290**	**346,598,407**	**351,822,806**	**5,224,399**	**335,110,124**
Amounts available for appropriations	**467,229,895**	**479,854,012**	**485,078,411**	**5,224,399**	**450,614,413**
Charges to appropriation (outflows):					
Salaries and benefits	277,424,610	296,947,830	294,414,084	2,533,746	285,988,997
Services and supplies	43,999,102	39,645,538	36,165,092	3,480,446	40,317,142
Capital outlay	4,276,504	4,654,740	622,906	4,031,834	703,370
Interest and fiscal charges	318,050	754,436	740,437	13,999	330,741
Transfers out	2,127,821	78,187	78,187	-	3,000,906
Total charges to appropriations	**328,146,087**	**342,080,731**	**332,020,706**	**10,060,025**	**330,341,156**
Budgetary fund balance, June 30	**$ 139,083,808**	**$ 137,773,281**	**$ 153,057,705**	**$ 15,284,424**	**$ 120,273,257**

See Notes to the Financial Statements

ORANGE COUNTY FIRE AUTHORITY
Fiduciary Funds
Statement of Fiduciary Net Position
June 30, 2016
(With Comparative Data for Prior Year)

	Pension Trust Funds		
	Extra Help Retirement	Total Pension Trust Funds	
		2016	2015
Assets:			
Cash and investments (Note 4):			
Local Agency Investment Fund - Domestic fixed income securities	$ 74,798	$ 74,798	$ 73,031
Total assets	**74,798**	**74,798**	**73,031**
Net position restricted for pensions	**$ 74,798**	**$ 74,798**	**$ 73,031**

See Notes to the Financial Statements

ORANGE COUNTY FIRE AUTHORITY
Fiduciary Funds
Statement of Changes in Fiduciary Net Position
Year ended June 30, 2016
(With Comparative Data for Prior Year)

	Pension Trust Funds		
	Extra Help Retirement	Total Pension Trust Funds 2016	Total Pension Trust Funds 2015
Additions:			
Contributions:			
Employer	$ 2,267	$ 2,267	$ 2,481
Plan members	8,923	8,923	11,831
Total contributions	11,190	11,190	14,312
Net investment income:			
Interest	1,219	1,219	714
Total net investment income	1,219	1,219	714
Total additions	**12,409**	**12,409**	**15,026**
Deductions:			
Benefits and refunds paid to plan members and beneficiaries	10,642	10,642	6,459
Total deductions	**10,642**	**10,642**	**6,459**
Change in net position	1,767	1,767	8,567
Net position, beginning of year	73,031	73,031	64,464
Net position, end of year	**$ 74,798**	**$ 74,798**	**$ 73,031**

See Notes to the Financial Statements

ORANGE COUNTY FIRE AUTHORITY

Index to Notes to the Financial Statements

Year ended June 30, 2016

Page

(1) Summary of Significant Accounting Policies 43
(2) Compliance and Accountability 51
(3) Prior Period Adjustment 52
(4) Cash and Investments 54
(5) Accounts Receivable 58
(6) Due from Other Governments 59
(7) Due to Other Governments 59
(8) Unearned and Unavailable Revenue 59
(9) Fund Balance of Governmental Funds – Nonspendable 60
(10) Fund Balance of Governmental Funds – Restricted 60
(11) Fund Balance of Governmental Funds – Committed 61
(12) Fund Balance of Governmental Funds – Assigned 61
(13) Fund Balance of Governmental Funds – Unassigned 63
(14) Interfund Transfers 63
(15) Capital Assets 64
(16) Long-term Liabilities 65
(17) Commitments and Contingencies 67
(18) Lessor in Operating Lease Agreements 69
(19) Lessee in Operating Lease Agreements 70
(20) Insurance 71
(21) Retirement Plan for Full-Time Employees 73
(22) Retirement Plan for Part-Time Employees 81
(23) Defined Benefit Retiree Medical Plan – Other Post-Employment Benefits (OPEB) 86
(24) Retiree Defined Contribution Healthcare Expense Reimbursement Plan 89
(25) Short-term Debt 90

This Page Intentionally Left Blank

(1) Summary of Significant Accounting Policies

(a) Description of the Reporting Entity

Effective March 1, 1995, the County of Orange (County) and the cities of Buena Park, Cypress, Dana Point, Irvine, Laguna Hills, Laguna Niguel, Lake Forest, La Palma, Los Alamitos, Mission Viejo, Placentia, San Clemente, San Juan Capistrano, Seal Beach, Stanton, Tustin, Villa Park, and Yorba Linda entered into a joint powers agreement to create the Orange County Fire Authority (OCFA). Since the creation of the OCFA, the cities of Aliso Viejo, Laguna Woods, Rancho Santa Margarita, Santa Ana, and Westminster have also joined as members.

The purpose of OCFA is to provide fire suppression, protection, prevention, and related and incidental services including, but not limited to, emergency medical and transport services and hazardous materials regulation, as well as providing facilities and personnel for such services. The OCFA's governing board consists of one representative from each member city and two from the County.

The operations of the OCFA are funded with a portion of property taxes collected by the County (Structural Fire Fund) for the unincorporated area and on behalf of all member cities except for the cities of Buena Park, Placentia, San Clemente, Santa Ana, Seal Beach, Stanton, Tustin, and Westminster, which are considered to be cash contract cities. The County pays all Structural Fire Fund taxes it collects to the OCFA. The cash contract cities make cash contributions based on OCFA's annual budget. Upon dissolution, all surplus money and property of the OCFA will be conveyed or distributed to each member in proportion to all funds provided to the OCFA by that member or by the County on behalf of that member during its membership. Each member must execute any instruments of conveyance necessary to effectuate such distribution or transfer.

As required by generally accepted accounting principles, these financial statements present both the OCFA as the primary government, as well as any of its component units. A component unit is an entity for which a primary government entity is considered to be financially accountable.

- The primary government is considered to be financially accountable for an organization if it appoints a voting majority of that organization's governing body, and (1) if the primary government is able to impose its will on that organization or (2) there is a potential for that organization to provide specific financial benefits to or impose specific financial burdens on the primary government.

- The primary government may also be considered financially accountable for an organization if that organization is fiscally dependent on the primary government (i.e., the organization is unable to approve or modify its budget, levy taxes or set rates/charges, or issue bonded debt without approval from the primary government).

- In certain cases, other organizations are included as component units if the nature and significance of their relationship with the primary government are such that their exclusion would cause the primary government's financial statements to be misleading or incomplete, even though the primary government is not considered financially accountable for that organization under the criteria previously described. A legally separate, tax exempt organization is reported as a component unit if (1) the economic resources received or held by the organization are entirely or almost entirely for the direct benefit of the primary government or its constituents; (2) the primary government is entitled to or has the ability otherwise access a majority of the economic resources received or held by the organization; and (3) the economic resources received or held by the organization are significant to the primary government.

Component units must be classified as either "blended" or "discrete" in the primary government's financial statements. A component unit is "blended" if the governing boards of the two organizations are substantially the same, or if the component unit provides services entirely or almost entirely to the primary government. Because of the closeness of its relationship with the primary government, a "blended" component unit is presented as though it is part of the primary government and, therefore, is included in both the government-wide and fund financial statements. Component units that do not meet either of these two criteria are considered "discrete" and are reported only in the government-wide financial statements.

A brief description of OCFA's component unit is as follows:

- The **OCFA Foundation** ("Foundation") was established by the OCFA Board of Directors in July 2010, and qualifies as a nonprofit corporation under Section 501(c)(3) of the Internal Revenue Code and Section 23701(d) of the California Revenue and Taxation Code. The purpose of the Foundation is to support the OCFA with the additional resources needed to provide an enhanced level of fire prevention, suppression, and emergency medical services to the citizens of Orange County. The Foundation assists the OCFA by conducting fundraising activities and securing non-government grant funds, services, materials, and contributions that support OCFA's mission. OCFA provided $50,000 from the General Fund as start-up funding for the Foundation. The tax exempt status of the Foundation was approved by the Internal Revenue Service on February 23, 2011, and the inaugural meeting of the Foundation Board was April 28, 2011.

  The Foundation's Board of Directors consists of no less than three and no more than seven members, the exact number determined by resolution of the Foundation Board. Foundation Board members must have been active in or had significant prior experience in governmental or community organizations, or the fire service. The Foundation Board may consist of any combination of members of the public, OCFA employees, and/or past or current OCFA Board members. Initially, the Chair of OCFA's Board appointed the first three Foundation Directors. As of June 30, 2016, there were five non-OCFA Board members on the Foundation's Board. Additional members may be appointed by the Foundation Board at a future date via a simple majority vote.

The Foundation is considered a component unit of OCFA, because the nature and significance of its relationship with OCFA is such that its exclusion would cause OCFA's financial statements to be misleading or incomplete. Within these financial statements, the Foundation is reported as a discrete component unit in the government-wide financial statements. The Foundation also issues separate, component unit financial statements that may be obtained through written request from the OCFA Finance Division at 1 Fire Authority Road, Irvine, California 92602.

(b) Measurement Focus and Basis of Accounting

Government-wide Financial Statements

The government-wide financial statements (i.e., the Statement of Net Position and the Statement of Activities), report information about the OCFA as a whole, excluding its fiduciary activities. For the most part, the effect of the interfund activity has been removed from these statements.

The Statement of Activities demonstrates the degree to which the direct expenses of the given function are offset by program revenues. Direct expenses are those that are clearly identifiable with a specific function. Program revenues include (1) charges to customers or applicants who purchase, use, or directly benefit from goods, services, or privileges provided by a given function and (2) grants and contributions that are restricted to meeting the operational or capital requirements of a particular function. Taxes and other items not properly included among program revenues are reported instead as general revenues.

The government-wide financial statements are reported using the *economic resources measurement focus* and the *accrual basis of accounting*. Revenues are recorded when earned and expenses are recorded when a liability is incurred, regardless of the timing of related cash flows. Property taxes are recognized as revenues in the year for which they are levied. Grants and similar items are recognized as revenue as soon as all eligibility requirements imposed by the provider have been met.

Fund Financial Statements

Separate financial statements are provided for governmental funds and fiduciary funds, even though the latter are excluded from the government-wide financial statements. Major individual governmental funds are reported as separate columns in the fund financial statements.

Governmental fund financial statements are reported using the *current financial resources measurement focus* and the *modified accrual basis of accounting*. Revenues are recognized when they are both measurable and available. Revenues are considered available when they are collectible within the current period or soon enough thereafter to pay liabilities of the current period. OCFA considers revenues to be available if they are typically collected within 180 days of the end of the current fiscal period, with the exception of property taxes, which are considered available if they are typically collected within 60 days of the end of the current fiscal period.

Expenditures generally are recorded when a liability is incurred under the accrual basis of accounting. However, debt service expenditures, as well as expenditures related to compensated absences and claims and judgments, are recorded only when payment is due.

Property taxes, charges for services, and interest associated with the current fiscal period are all considered to be susceptible to accrual and so have been recognized as revenues of the current fiscal period. All other revenue items are considered to be measurable and available only when cash is received by OCFA.

Fiduciary fund financial statements are reported using the same *economic resources measurement focus* and the *accrual basis of accounting* described for the government-wide financial statements.

(c) Major Funds and Other Fund Types

Major Governmental Funds

Major funds are those whose revenues, expenditures, assets, or liabilities are at least 10% of corresponding totals for all governmental funds. The General Fund is always a major fund. OCFA has elected to report all of its governmental funds as major funds.

- The **General Fund** is the primary operating fund of the OCFA and is used to account for all financial resources not accounted for and reported in another fund. The General Fund accounts for the financial activities of providing fire suppression, protection, prevention, and related services to OCFA's member cities and unincorporated areas. The primary sources of revenue are property taxes for fire protection (Structural Fire Fund), cash contracts, intergovernmental reimbursements, and various user fees.

- The **Communications and Information Systems Fund** is a capital projects fund used to account for the significant acquisition, improvement, or replacement of specialized communications and information technology systems and/or equipment.

- The **Fire Apparatus Fund** is a capital projects fund used to account for the significant acquisition, improvement, or replacement of fire apparatus, including vehicles, trailers, and helicopters.

- The **Fire Stations and Facilities Fund** is a capital projects fund used to account for the significant acquisition, improvement, replacement, or construction of fire stations and facilities.

Fiduciary Fund Types

- **Pension Trust Funds** are used to report resources that are required to be held in trust for the members and beneficiaries of defined benefit pension plans, defined contribution plans, other post-employment benefit plans, or other employee benefit plans. OCFA's pension trust fund accounts for the cost of the extra help post-employment defined benefit retirement plan.

(d) Cash and Investments

OCFA's cash and cash equivalents are considered to be cash on hand, demand deposits, and short-term investments with original maturities of three months or less from the date of acquisition. For financial statement presentation purposes, cash and cash equivalents are shown as both restricted and unrestricted cash and investments.

Investments are stated at fair value (the price that would be received to sell an asset or paid to transfer a liability in an orderly transaction between market participants), in accordance with GASB Statement No. 72. OCFA's policy is generally to hold investments until maturity. The State Treasurer's Investment Pool operates in accordance with appropriate state laws and regulations. The reported value of the pool is the same as the fair value of the pool shares.

(e) Receivables

All accounts receivable are shown net of an allowance for uncollectible amounts.

Under California law, counties assess and collect property taxes up to 1% of assessed value and can increase the property tax rate no more than 2% per year. The property taxes go into a pool and are then allocated to the cities and local government entities based on complex formulas. The County bills and collects the property taxes and distributes them to OCFA in installments during the year. Accordingly, OCFA accrues only those taxes which are received from the County within 60 days after year-end. A summary of the property tax calendar is as follows:

Lien date	January 1
Levy date	Fourth Monday of September
Due dates	November 1 and February 1
Delinquent dates	December 10 and April 10

(f) Prepaid Costs and Inventories

Certain payments to vendors reflect costs applicable to future accounting periods and are recorded as prepaid costs in both the government-wide and fund financial statements. OCFA accounts for all prepaid items (i.e., warranties, annual maintenance fees, and professional memberships) under the "consumption method." This means that expenditures are recognized proportionately over the period that the services are provided. Nonspendable fund balance in an amount equal to prepaid costs is reported in the governmental fund types, since these amounts are not in a spendable form.

OCFA accounts for all supplies inventories (i.e., office supplies, automotive parts, vehicle and jet fuel, etc.) under the "purchase method." This means that expenditures are recognized at the time they are purchased, rather than when they are consumed or used.

(g) Capital Assets

Capital assets of governmental activities, which include property, plant, and equipment assets, are reported in the government-wide financial statements. Capital assets are defined by OCFA as assets with an estimated useful life in excess of one year and with an initial, individual cost of $5,000. Such assets are recorded at historical cost or estimated historical cost if purchased or constructed. Donated or developer-contributed capital assets are recorded at estimated fair market value at the date of donation. The costs of normal maintenance and repairs that do not materially add to the value of the asset or materially extend the asset's useful life are not capitalized. Major outlays for capital assets and improvements are capitalized as projects are constructed. OCFA's capital assets are depreciated or amortized using the straight-line method over the following estimated useful lives:

Buildings and Improvements	45 years
Equipment	3 – 40 years
Vehicles	4 – 20 years

(h) Deferred Outflows and Inflows of Resources

In addition to assets, the Statement of Net Position of governmental activities and the Balance Sheet of governmental funds may report a separate section for deferred outflows of resources. Deferred outflows of resources represent a consumption of net position or fund balance that apply to future period(s) and so will not be recognized as outflows of resources (expenses or expenditures) during the current fiscal year. OCFA currently reports deferred outflows pertaining to pensions on the Statement of Net Position of governmental activities.

In addition to liabilities, the Statement of Net Position of governmental activities and the Balance Sheet of governmental funds may report a separate section for deferred inflows of resources. Deferred inflows of resources represent an acquisition of net position or fund balance that apply to future period(s) and so will not be recognized as inflows of resources (revenues) during the current fiscal year. Unavailable revenue in the governmental funds, which arises under the modified accrual basis of accounting, is currently the only item that qualifies for reporting as a deferred inflow. OCFA's governmental funds typically report unavailable revenues from two sources – intergovernmental and charges for services. These amounts will be recognized as an inflow of resources in the period that the amounts become available. OCFA also currently reports deferred inflows pertaining to pensions on the Statement of Net Position of governmental activities.

(i) Compensated Absences

OCFA's policy permits employees to accumulate earned but unused vacation and sick pay benefits. All vacation pay and unpaid sick leave to which employees are entitled under their respective Memorandums of Understanding (MOU's) has been accrued when incurred in the government-wide and fiduciary fund financial statements. A liability for these amounts is reported in governmental funds only if it has matured (for example, as a result of employee resignations or retirements).

(j) Long-term Obligations

Long-term debt and other long-term obligations are reported as liabilities of governmental activities in the government-wide Statement of Net Position, and issuance costs are recognized as an expense in the Statement of Activities in the period incurred. Bond premiums and discounts are deferred and amortized over the life of the bonds using the straight-line method. Bonds payable are reported net of the applicable bond premium or discount.

In the fund financial statements, governmental fund types recognize bond premiums and discounts, as well as bond issuance costs, during the current period. The face amount of debt issued is reported as other financing sources. Premiums received on debt issuances are reported as other financing sources while discounts on debt issuances are reported as other financing uses. Issuance costs, whether or not withheld from the actual debt proceeds received, are reported as debt service expenditures.

(k) Pensions

For purposes of measuring the net pension liability and deferred outflows/inflows of resources related to pensions and pension expense, information about the fiduciary net position of the Orange County Employees Retirement System (OCERS) plan and additions to/deductions from the plan's fiduciary net position have been determined on the same basis as they are reported by OCERS. For this purpose, benefit payments (including refunds of employee contributions) are recognized when due and payable in accordance with the benefit terms. Investments are reported at fair value.

(l) Fund Equity

The components of the fund balances of governmental funds reflect the component classifications described below.

- **Nonspendable** fund balance includes amounts that are not in a spendable form, such as prepaid items or supplies inventories, or that are legally or contractually required to remain intact, such as principal endowments.

- **Restricted** fund balance includes amounts that are subject to externally enforceable legal restrictions imposed by outside parties (i.e., creditors, grantors, contributors) or that are imposed by law through constitutional provisions or enabling legislation.

- **Committed** fund balance includes amounts whose use is constrained by specific limitations that the government imposes upon itself, as determined by a formal action of the highest level of decision-making authority. The Board of Directors serves as OCFA's highest level of decision-making authority and has the authority to establish, modify, or rescind a fund balance commitment via a minutes order, which may or may not be documented by a written Board resolution.

- **Assigned** fund balance includes amounts intended to be used by OCFA for specific purposes, subject to change, as established either directly by the Board of Directors or by management officials to whom assignment authority has been delegated by the Board of Directors. OCFA's Board of Directors has established a *Fund Balance Assignment Policy* which establishes the authority by which OCFA may set aside cumulative resources in fund balance for an intended future use. The Board of Directors has the authority to assign fund balance, and has delegated its authority to assign amounts for workers' compensation and the capital improvement program to the Assistant Chief of Business Services, or her designee, in accordance with the parameters outlined in the policy and subject to annual review and concurrence by the Budget and Finance Committee.

- **Unassigned** fund balance is the residual classification that includes spendable amounts in the General Fund that are available for any purpose.

When expenditures are incurred for purposes for which both restricted and unrestricted (committed, assigned or unassigned) fund balances are available, the OCFA's *Flow Assumptions Policy* specifies that restricted revenues will be applied first. When expenditures are incurred for purposes for which committed, assigned, or unassigned fund balances are available, OCFA's policy is to apply committed fund balance first, then assigned fund balance, and finally unassigned fund balance.

(m) Operating Contingency

In June 1998, OCFA established a General Fund Contingency Reserve ("operating contingency") at 15% of budgeted operating revenues, which was subsequently revised to 10% of budgeted non-grant operating expenditures. OCFA's policy states that the operating contingency be used only for operating contingencies, emergencies caused by calamitous events, and economic uncertainty. The operating contingency's balance is included within the unassigned fund balance category of the General Fund.

(n) Prior Year Data

The information included in the accompanying financial statements for the prior year has been presented for comparison purposes only and does not represent a complete presentation in accordance with generally accepted accounting principles. Certain minor reclassifications of prior year data have been made in order to enhance their comparability with current year figures.

(o) Use of Estimates

The financial statements are prepared in conformity with accounting principles generally accepted in the United States of America and, accordingly, include amounts that are based on management's best estimates and judgments. Actual results could differ from those estimates.

(2) Compliance and Accountability

(a) Budgetary Information

OCFA establishes accounting control through formal adoption of an annual operating budget for its governmental funds. The operating budgets are prepared on a basis consistent with generally accepted accounting principles. Annual appropriated budgets are adopted for all of OCFA's governmental funds.

Perspective differences occur when the framework used for budgeting differs from the fund structure used for financial reporting. OCFA's General Fund consists of four separately-budgeted funds that have been combined and consolidated for financial statement presentation. The table below reconciles fund balance for the General Fund as reported on the budgetary basis to the presentation in the financial statements. The Supplementary Schedules section of this report includes additional General Fund combining schedules for balance sheet, budgetary data, and actual operating data for the year ended June 30, 2016.

	Fund Balance as of June 30, 2016
Budgetary basis:	
General Operating Fund	$ 73,992,052
General Fund Capital Improvement Program (CIP)	4,761,135
Structural Fire Entitlement	584,464
Self Insurance	73,720,054
General Fund for financial statement presentation	$153,057,705

The adopted budget can be amended by the Board to change both appropriations and estimated revenues as unforeseen circumstances come to management's attention. Increases and decreases in revenue and appropriations and transfers between funds require the Board's approval; however, division and section managers, Assistant Chiefs, and Directors may authorize changes within funds and/or their respective authorized budgets. Expenditures may not exceed total appropriations at the individual fund level. It is the practice of OCFA to review the budgets mid-year and, if necessary, recommend changes to the Board. The following is a summary of the originally adopted expenditure budget (including carryovers of unexpended prior year encumbrances and transfers out) compared to the final budget by budgeted fund:

Fund	Original Budget	Increase/ (Decrease)	Final Budget
General Fund	$328,146,087	$13,934,644	$342,080,731
Communications and Information Systems	6,625,685	(4,831,152)	1,794,533
Fire Apparatus	18,042,177	1,532,139	19,574,316
Fire Stations and Facilities	854,248	51,829	906,077
Total budgeted governmental funds	$353,668,197	$10,687,460	$364,355,657

(b) Emergency Appropriations Policy

In September 2008, the Board adopted the Emergency Appropriations Policy to provide a means of increasing budgeted appropriations in the event that extraordinary fire or emergency incident activity occurs after the last Board meeting of the fiscal year, which may cause expenditures to exceed the authorized General Fund budget. The contingency appropriation, which may not exceed $3,000,000 each fiscal year, is established for unforeseen requirements, primarily salary and employee benefits for extraordinary fire or emergency response. No expenditures may be made directly against the contingency appropriations; however, OCFA management may recommend a transfer from the contingency appropriations to a specific purpose appropriation. The Chair of the Board of Directors or the Vice Chair, in the absence of the Chair, must pre-approve any such transfers. Upon approval by the Chair or Vice Chair, notice of this transfer must be provided immediately to the full Board in writing. There were no transfers made from the contingency appropriations during the year ended June 30, 2016; therefore, the budgetary comparison statements and schedules included in the financial statements do not reflect any increase to the final budgeted expenditures.

(c) Encumbrance Accounting

Encumbrance accounting is employed in governmental funds. Encumbrances represent commitments related to unperformed contracts for goods or services. Encumbrance accounting, under which purchase orders, contracts, and other commitments for the expenditure of resources are recorded to reserve that portion of the applicable appropriation, is utilized in OCFA's funds. Encumbrances outstanding at year-end are reported as restricted, committed, or assigned fund balance, depending on the type of revenue source associated with the encumbrance, and do not constitute expenditures or liabilities because the commitments will be honored during the subsequent year. All appropriations lapse at year-end with the exception of encumbered appropriations, which are effectually re-appropriated in the ensuing year's budget.

(3) Prior Period Adjustment

In response to concerns from OCFA's member agencies about the relationship of financial contributions to level of service received, an Equity Working Group was established to identify methods for mitigating these equity concerns. In September 2013, the Board of Directors approved a solution presented by the Equity Working Group, which required OCFA to issue equity payments from unrestricted revenue sources to qualifying Structural Fire Fund member agencies, based on a calculation of average Structural Fire Fund Tax rate. The solution also required that the City of Irvine, OCFA's largest Structural Fire Fund member in terms of property tax revenue, remain a member of OCFA until the year 2030. By November 2013, two thirds of the OCFA member agencies had approved the 2nd Amendment to the Joint Powers Agreement (2nd Amendment), and OCFA began to implement the new required equity measures.

The Board of Directors also approved requesting a judicial review of the 2nd Amendment to seek court validation. The validation process, which was initiated in December 2013, would affirm the ability to use unrestricted revenue sources for purposes of issuing equity payments to qualifying agencies, and would preclude any future challenges to the legality of the 2nd Amendment.

In August 2014, an Orange County Superior Court judge ruled against the OCFA in a validation hearing, stating that the 2nd Amendment was invalid and unenforceable as a matter of law. OCFA appealed the decision, but in March 2016 the appellate court issued an opinion affirming the invalidation of the 2nd Amendment.

As of June 30, 2015, OCFA had either paid or accrued as a liability all jurisdictional equity adjustment payments, plus interest, due to Structural Fire Fund members under the provisions of the 2nd Amendment as follows:

Government Agency	Amounts Paid	Unpaid, Accrued Equity Payments	Accrued Interest	Total
City of Irvine	$2,988,081	$9,501,321	$15,861	$12,505,263
City of Laguna Woods	-	5,616	5	5,621
City of Lake Forest	-	155	-	155
City of Rancho Santa Margarita	-	135,571	128	135,699
County of Orange	-	335,293	317	335,610
Total	$2,988,081	$9,977,956	$16,311	$12,982,348

The appellate court's opinion had the effect of nullifying the 2nd Amendment and, consequently, all amounts previously paid and/or accrued totaling $12,982,348 were considered invalid. As a result, during the year ended June 30, 2016, OCFA restated the beginning net position of its governmental activities and the beginning fund balance of its General Fund as follows:

	Governmental Activities	Governmental Funds
	Net Position	General Fund Fund Balance
As previously reported	$(169,124,373)	$120,273,257
Prior period adjustment	12,982,348	12,982,348
As restated	$(156,142,025)	$133,255,605

(4) Cash and Investments

(a) Financial Statement Presentation

OCFA maintains a cash and investment pool that is available for use for all funds. Each fund's position in the pool is reported on the combined balance sheet as cash and investments.

Cash and investments as of June 30, 2016, are reported in the accompanying financial statements as follows:

Statement of Net Position:	
Governmental activities	$177,729,367
Discretely presented component unit – OCFA Foundation	108,718
Statement of Fiduciary Net Position:	
Fiduciary funds	74,798
Total cash and investments	$177,912,883

Cash and investments consist of the following as of June 30, 2016:

Petty cash / cash on hand	$ 13,445
Demand deposits	(861,686)
Investments	178,761,124
Total cash and investments	$177,912,883

(b) Demand Deposits

At June 30, 2016, the carrying amount of the OCFA's demand deposits was $(861,686) and the bank balance was $1,137,419. The $1,999,105 difference represents outstanding checks and other reconciling items.

The California Government Code requires California banks and savings and loan associations to secure an entity's deposits by pledging government securities with a value of 110% of an entity's deposits. California law also allows financial institutions to secure entity deposits by pledging first trust deed mortgage notes having a value of 150% of an entity's total deposits. The entity's Treasurer may waive the collateral requirement for deposits which are fully insured by the FDIC. The collateral for deposits in federal and state chartered banks is held in safekeeping by an authorized agent of depository recognized by the State of California Department of Banking. The collateral for deposits with savings and loan associations is generally held in safekeeping by the Federal Home Loan Bank in San Francisco, California as an agent of depository. These securities are physically held in an undivided pool for all California public agency depositors. Under Government Code Section 53655, the placement of securities by a bank or savings and loan association with an "agent of depository" has the effect of perfecting the security interest in the name of the local governmental agency. Accordingly, all collateral held by California agents of depository are considered to be held for, and in the name of, the local government. The OCFA Treasurer may waive the collateral requirement for deposits that are fully insured up to $250,000 by the FDIC.

(c) Investments Authorized by Government Code and OCFA Investment Policy

The table below identifies investment types that are authorized by OCFA's investment policy and by California Government Code Section 53600 et seq. and Section 5922(d). The table also identifies provisions of the California Government Code (or OCFA's investment policy, if more restrictive) that address interest rate risk, credit risk, and concentration of credit risk. The table, however, does not cover investments of debt proceeds, if any, held by fiscal agent, which are governed by the provisions of debt agreements of OCFA rather than the general provisions of OCFA's investment policy. In addition, this table does not include other investment types that are allowable under the California Government Code but are not specifically authorized by OCFA's investment policy.

Investment Types	Maximum Maturity	Maximum % of Portfolio in Investment Type	Maximum % of Portfolio in Single Issuer
U.S. Treasury obligations	5 years	100%	100%
Federal agency securities	5 years	75%(1)	75%(1)
Bankers' acceptances	180 days	25%(1)	25%(1)
Commercial paper	270 days	15%(1)	15%(1)
Negotiable certificates of deposit	5 years	25%(1)	25%(1)
Repurchase agreements	14 days(1)	15%(1)	15%(1)
Money market mutual funds	n/a	15%(1,2)	15%(1,2)
Local Agency Investment Fund	n/a	75%(1)	75%(1)

(1) Based on OCFA investment policy requirement, which is more restrictive than state law
(2) No limit on automatic overnight sweep

(d) Investments Authorized by Debt Agreements

Proceeds of bonds or other indebtedness and any moneys set aside and pledged to secure payment of bonds may be invested in accordance with the resolution, indenture, or statutory provisions governing the issuance of the indebtedness. OCFA did not have any investments held by fiscal agent during Fiscal Year 2015/16.

(e) Investments in State Investment Pool

OCFA is a voluntary participant in the Local Agency Investment Fund (LAIF) that is regulated by California Government Code Section 16429 under the oversight of the Treasurer of the State of California. LAIF is overseen by the Local Agency Investment Advisory Board, which consists of five members in accordance with State statute. The State Treasurer's Office audits the fund annually. The fair value of the position in the investment pool is the same as the value of the pool shares.

(f) GASB Statement No. 72

OCFA adopted GASB Statement No. 72, *Fair Value Measurement and Application*, as of July 1, 2015. GASB Statement No. 72 establishes general principles for measuring fair value and standards of accounting and financial reporting for assets and liabilities measured at fair value.

Fair value is the price that would be received to sell an asset or paid to transfer a liability in an orderly transaction between market participants at the measurement date. OCFA categorizes its fair value measurements within the fair value hierarchy established by generally accepted accounting principles. The hierarchy is based on the valuation inputs used to measure the fair value of the asset. Level 1 inputs are quoted prices in active markets for identical assets. Level 2 inputs are significant other observable inputs. Level 3 inputs are significant unobservable inputs. OCFA has the following fair value measurements for its investments as of June 30, 2016:

	Fair Value Hierarchy Level			
	Level 1	Level 2	Level 3	Fair Value
Federal agency securities	$ -	$108,052,480	$ -	$108,052,480
Money market mutual funds	-	6,560,578	-	6,560,578
LAIF	-	64,148,066	-	64,148,066
Total	$ -	$178,761,124	$ -	$178,761,124

All of OCFA's investments are valued using Level 2 inputs. Federal agency securities are valued using institutional bond quotes. Money market investments that have a remaining maturity at the time of purchase of one year or less and are held by governments other than external investment pools, and investments held by 2a7-like external investment pools, are measured at amortized cost as provided in GASB Statement No. 31, *Accounting and Financial Reporting for Certain Investments and for External Investment Pools*. The fair value of LAIF is measured using a Net Asset Value (NAV) calculation determined by the pool.

(g) Credit Risk

Generally, credit risk is the risk that an issuer of an investment will not fulfill its obligation to the holder of the investment. This is measured by the assignment of a rating by a nationally recognized statistical rating organization. Presented below is the minimum rating required (where applicable) by the California Government Code, OCFA's investment policy, or debt agreements, as well as the actual rating as of year-end for each investment type.

		Rating at Year-End		
	Minimum Rating Required	Aaa/ AA+/ AAA	Unrated	Fair Value
Federal agency securities	N/A	$108,052,480	$ -	$108,052,480
Money market mutual funds	Aaa/AAA	-	6,560,578	6,560,578
LAIF	N/A	-	64,148,066	64,148,066
Total		$108,052,480	$70,708,644	$178,761,124

(h) Custodial Credit Risk

The custodial credit risk for *deposits* is the risk that in the event of the failure of a depository financial institution, a government will not be able to recover deposits or will not be able to recover collateral securities that are in the possession of an outside party. OCFA's investment policy requires that collateral be held by an independent third party with whom OCFA has a current custodial agreement. The custodial credit risk for *investments* is the risk that in the event of the failure of the counterparty to a transaction, a government will not be able to recover the value of investment or collateral securities that are in the possession of an outside party. OCFA's investment policy requires that all security transactions are conducted on a delivery-versus-payment (DVP) method and that all securities are held by a qualified, third-party custodian, as evidenced by safekeeping receipts. The trust department of OCFA's bank may act as third-party custodian, provided that the custodian agreement is separate from the banking agreement. As of June 30, 2016, none of the OCFA's deposits or investments was exposed to disclosable custodial credit risk.

(i) Concentration of Credit Risk

OCFA's investment policy imposes restrictions for certain types of investments with any one issuer to 15% of the total investment pool with the following exceptions: U.S. Treasury obligations (100%), LAIF (75%), federal agency securities (75%), bankers' acceptances (25%), and negotiable certificates of deposit (25%). With respect to concentration risk as of June 30, 2016, the OCFA is in compliance with the investment policy's restrictions. In addition, GASB Statement No. 40 requires a separate disclosure if any single issuer comprises more than 5% of the total investment value (exclusive of amounts held by fiscal agent). Investments guaranteed by the U.S. government and investments in mutual funds and external investment pools are excluded from this requirement. Investments with issuers exceeding 5% of the total investment portfolio at June 30, 2016, are summarized below.

Issuer	Fair Value	% of Portfolio
Federal Home Loan Bank (FHLB)	$52,988,280	29.6%
Freddie Mac	28,056,700	15.7%
Federal Farm Credit Bank (FFCB)	27,007,500	15.1%

(j) Interest Rate Risk

Interest rate risk is the risk that changes in market interest rates will adversely affect the fair value of an investment. Generally, the fair values of investments with longer maturities have greater sensitivity to changes in market interest rates. OCFA's investment policy limits investment maturities as a means of managing its exposure to fair value losses arising from increasing interest rates. OCFA's investment policy states that at least 50% of the portfolio must mature in one year or less, and unless matched to a specific requirement and approved by the Executive Committee and the Board of Directors, no portion of the portfolio may exceed five years. OCFA has elected to use the segmented time distribution method of disclosure for its interest rate risk. As of June 30, 2016, the OCFA had the following investments and maturities:

	Investment Maturities in Months			
	6 or Less	7 to 12	13 to 60	Fair Value
Federal agency securities	$ 55,978,650	$ -	$52,073,830	$108,052,480
Money market mutual funds	6,560,578	-	-	6,560,578
LAIF	64,148,066	-	-	64,148,066
Total	$126,687,294	$ -	$52,073,830	$178,761,124

As of June 30, 2016, OCFA's investments included the following callable investments, which are considered to be exposed to interest rate risk:

Issuer	Call Date(s)	Yield to Call	Maturity Date	Fair Value
Freddie Mac	8/28/2016	0.827%	11/28/2017	$10,008,100
Federal Farm Credit Bank (FFCB)	Anytime	0.559%	10/15/2018	10,000,200
Federal Farm Credit Bank (FFCB)	9/6/2016	0.816%	9/6/2018	8,007,120
Federal Home Loan Bank (FHLB)	8/10/2016	0.662%	8/10/2018	6,003,780

(5) Accounts Receivable

Accounts receivable, net of an allowance for doubtful accounts, consists of the following as of June 30, 2016:

	Governmental Funds			Component Unit
	General Fund	Fire Apparatus	Total	OCFA Foundation
Fire prevention/late fees	$ 644,252	$ -	$ 644,252	$ -
Ambulance/other reimbursements	1,959,330	-	1,959,330	-
Due from developers	-	124,200	124,200	-
Other/miscellaneous	33,204	-	33,204	90
Accounts receivable	2,636,786	124,200	2,760,986	90
Allowance for doubtful accounts	(194,216)	-	(194,216)	-
Accounts receivable, net	$2,442,570	$124,200	$2,566,770	$90

(6) Due from Other Governments

Amounts due from other governments, net of an allowance for doubtful accounts, consist of the following as of June 30, 2016:

	Governmental Funds	Primary Government
	General Fund	Governmental Activities
Fire protection and other services:		
Cash contract cities – leave balances and other contract costs	$ 182,553	$ 1,804,269
State responsibility area	1,465,902	1,465,902
Airport rescue firefighting	745,391	745,391
Other services	136,489	136,489
Subtotal	2,530,335	4,152,051
Assistance by hire/activation	4,096,172	4,096,172
Grants	392,284	392,284
Property tax/tax increment	3,054,319	3,054,319
Other/miscellaneous	100,000	100,000
Due from other governments	10,173,110	11,794,826
Allowance for doubtful accounts	(122,855)	(122,855)
Due from other governments, net	$10,050,255	$11,671,971

(7) Due to Other Governments

As of June 30, 2016, due to other governments totaling $123,047, as reported in both the governmental activities and the governmental funds (General Fund), consists of amounts payable to the County of Orange in conjunction with bankruptcy proceeds.

(8) Unearned and Unavailable Revenue

Unavailable revenue in the governmental funds consists of amounts that are considered *unavailable* to finance the expenditures of the current fiscal period. Only the amounts that are *unearned* are reported as liabilities of governmental activities. Unearned revenues consist of the following as of June 30, 2016:

	Governmental Funds	Primary Government	Component Unit
	General Fund	Governmental Activities	OCFA Foundation
Unearned revenue:			
Helicopter hangar rental deposits	$16,612	$16,612	$ -
Helicopter hangar rent – July 2016	10,699	10,699	-
Cell tower rent – July 2016	3,605	3,605	-
Miscellaneous cash advances	2,200	2,200	6,000
Total	$33,116	$33,116	$6,000

(9) Fund Balance of Governmental Funds – Nonspendable

Prepaid costs are reported as an asset until the expenditures are recognized proportionately over the future period in which the services are to be provided. An amount equal to the asset is reported as nonspendable fund balance in the governmental funds, since these amounts are not in a spendable form.

Nonspendable fund balance consists of the following as of June 30, 2016:

	General Fund
Retirement contributions:	
Fiscal Year 2016/17	$35,000,000
Fiscal Year 2015/16	1,136,149
Maintenance and support	513,268
Warranties	25,540
Subscriptions and memberships	39,840
Other	65,048
Total	$36,779,845

In January 2015, OCFA prepaid a portion of its Fiscal Year 2015/16 retirement contributions to the Orange County Employees Retirement System (OCERS) totaling $29,539,884. In October 2015 and January 2016, OCFA prepaid a portion of its Fiscal Year 2016/17 retirement contributions to OCERS totaling a combined $35,000,000. The prepayments produced savings of over $1.7 million in Fiscal Year 2015/16, and are expected to produce savings of over $2.0 million in Fiscal Year 2016/17. Due to the timing of the pay period calendar, the unamortized balance of the January 2015 prepayment totaled $1,136,149 as of June 30, 2016. The entire amount of the October 2015 and January 2016 prepayments was unamortized as of June 30, 2016. Other prepaid items as of June 30, 2016, included various equipment warranties on mobile data computers, laptops, computers, pagers, tablets, and monitors; and other amounts such as annual maintenance and support fees, subscriptions, and professional memberships.

(10) Fund Balance of Governmental Funds – Restricted

Restricted fund balance in the General Fund includes grant-funded or other restricted, unexpended encumbrances outstanding at year-end, as well as donations received for specific programs. Restricted fund balance in the Fire Stations and Facilities Fund includes CALFIRE contract revenues that are legally restricted for new fire station development or improvements to existing fire stations. Restricted fund balance consists of the following as of June 30, 2016:

	General Fund	Fire Stations and Facilities	
	Operations Department	Capital Improvement Program	Total
Purpose of encumbrances:			
Urban Search and Rescue grant program	$ 5,777	$ -	$ 5,777
California Joint Apprenticeship Committee	5,511	-	5,511
	11,288	-	11,288
Donations – disaster preparation academy	2,579	-	2,579
CALFIRE station(s)	-	533,232	533,232
Total	$13,867	$533,232	$547,099

(11) Fund Balance of Governmental Funds – Committed

In July 1999, the Board of Directors authorized that $4,405,086 be set aside to fund OCFA-related service or resource enhancement projects in certain structural fire fund cities. In January 2012, the Board of Directors authorized an additional $622,106 to be set aside for the same purpose. As of June 30, 2016, the remaining unspent amount totaling $584,464 was reported as a fund balance commitment in the General Fund. The funds are committed for projects in the following cities:

City	General Fund
Aliso Viejo	$ 281
Irvine	530,971
Laguna Niguel	53,212
Total	$584,464

(12) Fund Balance of Governmental Funds – Assigned

Assigned fund balance includes the following as of June 30, 2016:

Capital Improvement Program	$ 53,746,805
Workers' compensation	73,720,054
Assigned, unexpended encumbrances	7,235,814
Total	$134,702,673

The Board of Directors has established a *Fund Balance Assignment Policy* authorizing the assignment of fund balance to the Capital Improvement Program and self-insured workers' compensation claims.

- The assignment to the Capital Improvement Program reflects cumulative amounts transferred from the General Fund to the capital projects funds, net of actual cumulative project expenditures and other revenue sources accounted for in those funds. The assignment may also include net resources accumulated within the General Fund itself in order to fund purchases and projects that are capital in nature but do not necessarily meet the criteria to be reported in one of OCFA's capital projects funds. The assignment may not exceed the net cost of future identifiable projects.

Fund balance assigned for the Capital Improvement Program totaled $53,746,805 as of June 30, 2016, and is reported in the General Fund ($4,668,314), Communications and Information Systems Fund ($18,977,557), Fire Apparatus Fund ($14,788,654) and Fire Stations and Facilities Fund ($15,312,280).

- The assignment to workers' compensation reflects the cumulative difference between actual workers' compensation expenditures incurred and budgeted costs, which are based on an annual actuarial valuation prepared by an external actuary and a confidence level set by the Board of Directors. The assignment for workers' compensation is reported in the General Fund and totaled $73,720,054 as of June 30, 2016.

Assigned fund balance pertaining to unexpended encumbrances outstanding as of June 30, 2016, totaled $7,235,814 and is summarized below for each governmental fund:

	Communications and Information Systems	Fire Apparatus	Fire Stations and Facilities
Purpose of Encumbrance	Communications and IT Projects	Fire Apparatus and Other Vehicles	Construction Projects
100' tractor drawn aerials	$ -	$5,227,858	$ -
Paramedic squads and Type 6 brush patrols	-	1,203,215	-
Pickup trucks	-	232,534	-
RFOTC audio visual upgrade design	24,715	-	-
Structural design and documents for Urban Search and Rescue warehouse improvements	-	-	13,135
Total	$24,715	$6,663,607	$13,135

Purpose of Encumbrance	General Fund								
	Executive Management	Operations Department	Community Risk Reduction Department	Business Services	Support Services Department	Organizational Planning Department	Facilities Projects	Communications and IT Projects	Total
Wildland clothing	$ -	$ -	$ -	$63,724	$ -	$ -	$ -	$ -	$ 63,724
Electric reach truck	-	-	-	41,056	-	-	-	-	41,056
Honor guard uniforms	25,682	-	-	-	-	-	-	-	25,682
Swift water clothing	-	25,202	-	-	-	-	-	-	25,202
Laptops	-	-	-	-	-	-	-	24,172	24,172
Computers, monitors, and speakers	-	-	-	-	-	-	-	22,680	22,680
Auto data updater license	-	-	-	-	-	21,000	-	-	21,000
Sharepoint support	-	-	-	-	19,350	-	-	-	19,350
E-mail security and support	-	-	-	-	17,200	-	-	-	17,200
Vehicle repairs	-	-	-	-	16,077	-	-	-	16,077
Code books	-	-	15,845	-	-	-	-	-	15,845
Galvanized guardrails	-	-	-	-	-	-	15,585	-	15,585
Other	11,008	26,282	-	57,919	67,116	-	54,402	10,057	226,784
Total	$36,690	$51,484	$15,845	$162,699	$119,743	$21,000	$69,987	$56,909	$534,357

(13) Fund Balance of Governmental Funds – Unassigned

Unassigned fund balance in the General Fund consists of the following as of June 30, 2016:

10% Operating Contingency	$28,778,587
All other residual amounts available for any purpose	7,978,217
Total	$36,756,804

(14) Interfund Transfers

Interfund transfers are used to move revenues from the fund required by statue or budget to collect them to the fund required by statute or budget to expend them. Interfund transfers for the year ended June 30, 2016, are as follows:

Fund	Transfers In	Transfers Out
General Fund	$ -	$78,187
Communications and Information Systems	78,187	-
Total	$78,187	$78,187

Transfers were made from the General Fund to the Communications and Information Systems Fund for current and future capital improvement projects identified in the Capital Improvement Plan.

(15) Capital Assets

(a) Changes in Capital Asset Balances by Asset Class

Capital asset activity of the OCFA Foundation for the year ended June 30, 2016, was as follows:

Component Unit/ OCFA Foundation	Beginning Balances	Increases	Decreases	Transfers	Ending Balances
Capital assets depreciated/amortized:					
Equipment	$ -	$ 10,000	$ (10,000)	$ -	$ -
Capital assets, net	$ -	$ 10,000	$ (10,000)	$ -	$ -

Capital asset activity of OCFA's governmental activities for the year ended June 30, 2016, was as follows:

Primary Government/ Governmental Activities	Beginning Balances	Increases	Decreases	Transfers	Ending Balances
Capital assets not depreciated/amortized:					
Land	$ 37,887,850	$ -	$ -	$ -	$ 37,887,850
Construction in progress	5,092,288	101,752	-	(5,091,699)	102,341
Work in progress	4,121,289	2,718,052	-	(4,043,637)	2,795,704
Total capital assets not depreciated/amortized	47,101,427	2,819,804	-	(9,135,336)	40,785,895
Capital assets depreciated/amortized:					
Buildings	137,772,434	-	-	5,091,699	142,864,133
Equipment	58,076,611	624,898	(131,555)	1,304,613	59,874,567
Vehicles	71,403,080	606,932	(209,265)	2,739,024	74,539,771
Subtotal	267,252,125	1,231,830	(340,820)	9,135,336	277,278,471
Less accumulated depreciation/amortization:					
Buildings	(37,322,693)	(3,166,163)	-	-	(40,488,856)
Equipment	(33,700,818)	(2,636,367)	122,185	-	(36,215,000)
Vehicles	(44,083,199)	(3,465,452)	209,265	-	(47,339,386)
Subtotal	(115,106,710)	(9,267,982)	331,450	-	(124,043,242)
Total capital assets depreciated/amortized, net	152,145,415	(8,036,152)	(9,370)	9,135,336	153,235,229
Capital assets, net	$199,246,842	$(5,216,348)	$ (9,370)	$ -	$194,021,124

(b) Net Investment in Capital Assets

The portion of the governmental activities net position that is invested in capital assets, net of related debt, is calculated as follows:

Capital assets, net of accumulated depreciation/amortization	$194,021,124
Capital-related debt – 2011 aircraft lease refinance	(6,110,447)
Net investment in capital assets	$187,910,677

(c) Capital Assets Acquired Under Capital Lease

The above amounts include assets acquired by capital lease, classified as follows by major asset class:

Equipment	$22,074,284
Vehicles	15,605,764
Total capital assets acquired under capital lease	$37,680,048

(d) Depreciation/Amortization Expense

Depreciation/amortization expense of $9,267,982 was charged to public safety in the Statement of Activities.

(16) Long-term Liabilities

(a) Changes in Long-Term Liabilities

Long-term liability activity for the year ended June 30, 2016, is summarized in the table below.

Governmental Activities	Beginning Balances	Additions	Deletions	Ending Balances	Due Within One Year
Net pension liability:					
OCERS pension plan	$466,968,323	$133,428,399	$ (82,726,916)	$517,669,806	$ -
Extra Help pension plan	240,358	-	(76,667)	163,691	-
	467,208,681	133,428,399	(82,803,583)	517,833,497	-
Capital lease purchase agreement:					
Aircraft Lease Refinance-2011	8,446,726	-	(2,336,279)	6,110,447	2,379,140
Accrued claims and judgments:					
Workers' compensation	62,372,690	6,716,066	(7,892,111)	61,196,645	7,743,304
Compensated absences	16,296,101	12,938,324	(12,215,217)	17,019,208	3,254,937
Net OPEB obligation	57,553,126	13,550,385	(4,460,115)	66,643,396	-
Total	$611,877,324	$166,633,174	$(109,707,305)	$668,803,193	$13,377,381

The capital lease purchase agreement is liquidated by the Fire Apparatus Fund. The extra help pension plan is liquidated by the Extra Help Retirement Fund. All other long-term liabilities are normally liquidated by the General Fund.

(b) Pension Plans

OCFA participates in two defined benefit pension plans that are administered through a trust or equivalent arrangement. Additional information is provided for these plans within these notes as Note 21 and Note 22. Following is a summary of plan activities as of and for the year ended June 30, 2016:

Description	OCERS Pension Plan	Extra Help Pension Plan	Total
Net pension liability	$517,669,806	$163,691	$517,833,497
Deferred outflows of resources related to pensions	139,005,504	35,040	139,040,544
Deferred inflows of resources related to pensions	(35,819,433)	(92,134)	(35,911,567)
Pension expenditures associated with net pension liabilities (as reported in the fund financial statements)	82,726,916	10,642	82,737,558
Pension expense associated with net pension liabilities (as reported in the government-wide financial statements)	94,784,899	(15,017)	94,769,882

(c) Capital Lease Purchase Agreement – Aircraft Lease Refinance (2011)

On December 22, 2008, OCFA entered into a Master Aircraft Lease Agreement (Agreement) with SunTrust Equipment Finance & Leasing Corp. (SunTrust). Under the terms of the Agreement, $21,515,238 was deposited into an escrow account with SunTrust Bank, Inc. (SunTrust Bank) to be used by OCFA for the acquisition of certain aircraft equipment. OCFA purchased two helicopters and related equipment for a total amount of $21,538,675, using the original proceeds of the lease and $23,437 of accrued interest. The helicopters and related equipment have been capitalized as equipment in the government-wide financial statements. Title to the equipment vests with OCFA during the term of the Agreement; accordingly, the lease has been recorded as a capital lease liability of OCFA.

On November 16, 2011, the terms of the Agreement were amended to reflect a reduction in the annual interest rate from 3.7609% to 2.58%. A 1.75% prepayment premium totaling $286,599, plus accrued interest for the period September 22, 2011, through November 16, 2011, totaling $92,386, were added to the outstanding principal balance to be repaid over the remaining life of the lease. Rental payments are payable quarterly commencing March 22, 2009, and terminating on December 22, 2018. During the year ended June 30, 2016, OCFA made principal and interest payments totaling $2,336,279 and $195,444, respectively.

The outstanding balance of the capital lease liability was $6,110,447 as of June 30, 2016. Future annual lease payment requirements are as follows:

Fiscal Year Ended June 30	Principal	Interest	Total
2017	$2,397,140	$134,583	$2,531,723
2018	2,459,589	72,134	2,531,723
2019	1,253,718	12,144	1,265,862
Total	$6,110,447	$218,861	$6,329,308

(d) Compensated Absences

OCFA is obligated to its employees for the following accumulated earned but unused leave benefits as of June 30, 2016:

	Vacation	Comp/Other	Sick Leave	Santa Ana General Leave	Total
Safety Members	$ 9,970,950	$169,704	$1,511,630	$1,597,640	$13,249,924
General Members	1,883,853	367,893	1,493,462	24,076	3,769,284
Total	$11,854,803	$537,597	$3,005,092	$1,621,716	$17,019,208

Sick leave includes only those amounts that OCFA is obligated to reimburse employees at the end of their active service life. On March 5, 2012, OCFA and the City of Santa Ana entered into an agreement to establish a general leave bank for transitioning personnel from the Santa Ana Fire Management Association and the Santa Ana Fire Benevolent Association with more than ten years of service. Under the terms of the agreement, transitioning employees are required to exhaust their respective OCFA accrued leave banks before utilizing general leave transferred from the city. OCFA will pay amounts due to transitioning employees who use time from the general leave bank, and the City of Santa Ana will then reimburse those amounts to OCFA. General leave is not eligible to be cashed out by employees in lieu of using the time, and is available for use through April 13, 2017. Any amounts remaining at that time will no longer be available for use by transitioning employees. The portion of OCFA's compensated absences long-term liability that is reimbursable by the City of Santa Ana is offset by a long-term receivable of an equal amount on the Statement of Net Position.

(17) Commitments and Contingencies

(a) Outstanding Encumbrances / Commitments with Vendors

As of June 30, 2016, commitments for outstanding encumbrances (unperformed purchase orders and contracts for goods and services) by major governmental fund are as follows:

General Fund	$ 545,645
Communications and Information Systems	24,715
Fire Apparatus	6,663,607
Fire Stations and Facilities	13,135
Total outstanding encumbrances	$7,247,102

Significant individual commitments with vendors as of June 30, 2016, are identified below.

Fund / Vendor	Description	Original Commitment	Spent-to-Date	Remaining Commitment
General Fund:				
Linegear Fire & Rescue	Wildland clothing	$ 63,724	$ -	$ 63,724
Southwest Material Handling, Inc.	Electric reach truck	41,056	-	41,056
Keystone Uniforms	Honor guard uniforms	25,682	-	25,682
The Rescue Source	Swift water clothing	21,573	-	21,573
Deccan, Inc.	Auto data updater license	21,000	-	21,000
Communications and Information Systems:				
TK1SC, Inc.	RFOTC audio visual upgrade design	79,750	55,035	24,715
Fire Stations and Facilities:				
KME Fire Apparatus	(4) 100' tractor drawn aerials	5,227,858	-	5,227,858
Boise Mobile Equipment	(5) paramedic squads; (1) type 6 brush patrol	1,203,215	-	1,203,215
Lake Chevrolet	(6) Chevy Colorado pickup trucks	179,333	-	179,333
DDL Traffic, Inc.	Right-of-way preemption equipment for Chevy Colorado pickup trucks	34,642	-	34,642
Lewis/Schoeplein Architects	Structural design and documents for Urban Search and Rescue warehouse improvements	60,280	47,145	13,135

(b) Pending Litigation

OCFA is currently in the discovery phase of an employee discrimination case. OCFA's legal counsel believes that it is unlikely OCFA will obtain a favorable outcome in this case, based on the results of two related internal investigations and resulting employee discipline. However, the degree of likelihood and amount of any potential legal liability could not be determined at this time. Because the plaintiff is still fully-employed by OCFA, any damages awarded would most likely be based on emotional distress claims.

(18) Lessor in Operating Lease Agreements

(a) Aircraft Hangar Leases

OCFA has entered into Aircraft Hangar Lease agreements to provide spaces to tenants in the western portion of the OCFA-owned aircraft hangar at Fullerton Municipal Airport. The original cost of the aircraft hangar's western was $2,201,950, and the net book value was $2,055,154 as of June 30, 2016. Fiscal Year 2015/16 depreciation expense totaled $48,932. The terms of the agreements are as follows:

Lessee/Tenant	Agreement Date	Term	Initial Monthly Rent	Automatic Annual Rent Increase
Ladera Aircraft, LLC	October 30, 2013	Five Years	$4,924	2.5%
Lidar America, LLC	June 1, 2015	Five Years	$5,391	2.5%
Hangar 21 Helicopters	January 1, 2016; Amended June 1, 2016	Three Years	$5,750	0.0%

Rental revenue totaled $152,117 for Fiscal Year 2015/16. Future potential rental revenue under the terms of the leases is as follows:

Fiscal Year	Ladera Aircraft, LLC	Lidar America, LLC	Hangar 21 Helicopters	Total
2016/17	$ 63,108	$ 66,450	$ 69,000	$198,558
2017/18	64,688	68,110	69,000	201,798
2018/19	21,740	69,817	63,250	154,807
2019/20	-	65,461	-	65,461
2020/21	-	-	-	-
Total	$149,536	$269,838	$201,250	$620,624

(b) Wireless Communications Facilities Site Lease

On March 24, 2011, OCFA entered into a Wireless Communications Facilities Site Lease with Vista Towers, LLC (Vista), to provide space at the OCFA-owned Regional Fire Operations and Training Center to install and operate a digital mobile radio communications site consisting of up to two wireless communication towers, equipment shelters, and cabinets, for up to six cell phone carriers. In July 2015, the Board of Directors approved Vista's request to assign its interest in the lease to SBA Towers VI, LLC (SBA). SBA has assumed the payment terms of the original agreement, and is responsible for the installation, construction, maintenance, repairs, replacement, and operations of the towers and, if applicable, the removal of the towers upon termination of the lease.

The lease term commenced on the earlier of the pulling of all permits necessary for construction, or September 24, 2012, and continues for five years from that date. The lease may be renewed for up to four consecutive five-year increments, for a total of twenty-five years. Rent is due the first of each month and is determined based on the number of carriers being occupied by each of the towers. SBA pays $1,250 for each month in which there is one or no carrier on one of the towers, and $1,000 per month for each additional carrier occupied on each tower beyond the first carrier. Base rent automatically increases by 3% annually.

OCFA began collecting base rent in July 2012, with rent for a second and third carrier commencing in June and October 2013, respectively. Rental revenue totaled $40,955 for Fiscal Year 2015/16. Future potential rental revenue, assuming rent for the three additional carriers may commence January 1, 2017, is as follows:

Fiscal Year(s)	Carriers 1-3	Carriers 4-6	Total
2016/17	$ 43,458	$ 19,674	$ 63,132
2017/18	44,765	40,485	85,250
2018/19	46,108	41,709	87,817
2019/20	47,497	42,966	90,463
2020/21	48,924	44,262	93,186
2021/22 - 2025/26	267,480	242,022	509,502
2026/27 - 2030/31	310,051	280,566	590,617
2031/32 - 2035/36	359,514	325,296	684,810
2036/37 - 2040/41	81,793	74,013	155,806
Total	$1,249,590	$1,110,993	$2,360,583

(19) Lessee in Operating Lease Agreements

OCFA is obligated under operating lease agreements for the rental of various fire stations, including a land lease at Fullerton Municipal Airport:

- Twenty-six city-owned stations are leased for $1 per year through June 30, 2030. In addition, OCFA leases land from three cities for three OCFA-owned stations. The station land leases are for $1 per year and extend through June 30, 2030 (Station 6); November 26, 2057 (Station 17); and April 30, 2045 (Station 36).

- On June 14, 2010**,** OCFA entered into a land lease agreement with the City of Fullerton for a new space at Fullerton Municipal Airport. Monthly lease payments of $2,886 for the eastern half of the building commenced January 2011. An additional monthly lease payment of $2,070 for the western half of the building commenced July 2013. Total monthly rent will increase annually by an amount equal to the change in the consumer price index, from a minimum of 3% to a maximum of 5%. The term of the agreement extends forty years through July 2050, with a fifteen year extension option through July 2065.

- On August 25, 2011, the OCFA Executive Committee approved the execution of a Lease Agreement with FW Aviation, LLC for a training tower at Fire Station No. 41 Air Operations and Maintenance Facility at Fullerton Airport, which includes a helicopter training prop, an additional restroom, and approximately 600 square feet of classroom/storage area. The lease term is for ten years commencing September 2011, with an optional ten-year extension. Initial monthly rent of $1,575 will increase by $18 each year.

Future minimum lease payments for the OCFA's operating lease obligations are as follows:

Fiscal Year(s)	City-Owned Stations/ Land Leases	Airport Land Lease	Airport Training Tower	Total
2016/17	$ 29	$ 71,016	$ 19,944	$ 90,989
2017/18	29	73,140	20,160	93,329
2018/19	29	75,324	20,376	95,729
2019/20	29	77,592	20,592	98,213
2020/21	29	79,920	20,808	100,757
2021/22 - 2025/26	145	436,992	3,474	440,611
2026/27 - 2030/31	118	506,652	-	506,770
2031/32 - 2035/36	10	587,376	-	587,386
2036/37 - 2040/41	10	680,928	-	680,938
2041/42 - 2045/46	9	789,348	-	789,357
2046/47 - 2050/51	5	818,100	-	818,105
2051/52 - 2055/56	5	-	-	5
2056/57 - 2060/61	1	-	-	1
Total	$448	$4,196,388	$105,354	$4,302,190

(20) Insurance

(a) Coverage Limits

OCFA has purchased commercial insurance coverage for general, auto, property, volunteer accident, aviation, and pollution liabilities; public official and auto verifier bonds; and excess coverage for the self-insured workers compensation. Coverage limits include the following:

Type of Coverage	Limit	Deductible
General and Auto Liability:		
Each Occurrence or Wrongful Act	$1,000,000	
General Annual Aggregate	$2,000,000	
Management Liability	$1,000,000	$5,000
Cyber Liability	$1,000,000	
Auto Liability	$1,000,000 combined single limit	$1,000 - $3,000
Garage Keepers Legal Liability	$250,000	$250 - $500
Umbrella Liability	$10,000,000	
Property Liability:		
Buildings and Contents	Scheduled replacement cost	$5,000
Crime/Employee Dishonesty	$1,000,000	$5,000
Volunteer Accident:		
Accidental Death and Dismemberment	$25,000 each occurrence; $250,000 aggregate per accident	
Accident Medical Expense	$100,000 per occurrence	
Dental	$250 per tooth	
Aircraft Hull and Liability	$50,000,000 per occurrence	$15,000 - $50,000
Pollution Liability	$1,000,000 per condition	$25,000
Public Official Bonds	$1,000,000 each	
Auto Verifier Bonds	$5,000 each	
Excess Workers Compensation	Statutory limits	

At June 30, 2016, OCFA had no outstanding claims which exceed insurance coverage. There have been no significant changes in insurance coverage as compared to last year, and settlements have not exceeded coverage in each of the past three fiscal years.

(b) Self-Insurance

OCFA transitioned its program for workers' compensation insurance from Guaranteed Cost to Self-Insurance effective March 1, 2002. OCFA's self-insurance program covers workers' compensation claims up to $50,000,000, subject to a $2,000,000 self-insured retention (SIR) per incident. Workers' compensation claims in excess of the self-insured level are insured by the California State Association of Counties Excess Insurance Authority (CSAC-EIA) at statutory limits. OCFA utilizes the services of a third-party claims administrator for administration of workers' compensation claims.

As of June 30, 2016, accrued claims and judgments for workers' compensation totaled $61,196,645 and were recorded as a long-term liability in the government-wide financial statements. This liability reflects the present value of estimated outstanding losses at the 50% confidence level, as determined by an actuarial valuation dated December 31, 2015, and includes claims that have been incurred but not yet reported (IBNR's). A confidence level is the statistical certainty that an actuary believes funding will be sufficient. For example, a 50% confidence level means that the actuary believes funding will be sufficient in five years out of ten. On May 27, 2010, the Board of Directors authorized to change the OCFA's confidence level from 80% to 50%.

Following is a summary of changes in workers' compensation claims payable for the years ended June 30, 2016 and 2015, including the current and long-term portions at year-end.

	Fiscal Year Ended	
	June 30, 2016	June 30, 2015
Unpaid claims at beginning of fiscal year	$62,372,690	$56,789,859
Incurred claims (including IBNR's)	6,716,066	12,026,082
Claim payments	(7,892,111)	(6,443,251)
Unpaid claims at end of fiscal year	$61,196,645	$62,372,690
Current portion	$ 7,743,304	$ 7,076,667
Long-term portion	53,453,341	55,296,023
Unpaid claims at end of fiscal year	$61,196,645	$62,372,690
Confidence level at end of fiscal year	50%	50%

Because of the long-term nature of this liability, it is excluded from the OCFA's governmental fund financial statements under the modified accrual basis of accounting. However, OCFA has established a fund balance assignment for workers' compensation in the General Fund in the amount of $73,720,054. This assignment reflects the cumulative difference for multiple years between actual expenditures and budgeted costs, which are based on the annual actuarial valuation. Actual expenditures for workers' compensation cases often occur over multiple years, attributing to the cumulative difference between budgeted costs and expenditures.

(21) Retirement Plan for Full-Time Employees

(a) General Information about the Plan

Plan Description and Administration

OCFA participates in the Orange County Employees Retirement System (OCERS), a cost-sharing multiple-employer, defined benefit pension plan for the County of Orange, the City of San Juan Capistrano, and thirteen other agencies – Orange County Cemetery District; Orange County Children and Families Commission; Orange County Department of Education; Orange County Employees Retirement System; Orange County Fire Authority (OCFA); Orange County In-Home Supportive Services Public Authority; Orange County Local Agency Formation Commission;

Orange County Public Law Library; Orange County Sanitation District; Superior Court of California; Orange County Transportation Authority; Transportation Corridor Agencies; and the University of California, Irvine Medical Center and Campus. The Orange County Department of Education and the University of California, Irvine Medical Center and Campus are closed to new member participation and only the latter has remaining active employees. Capistrano Beach, Cypress Recreation & Parks District, Orange County Vector Control District, and the City of Rancho Santa Margarita are no longer active plan sponsors, but retired members and their beneficiaries, as well as deferred members, remain in the OCERS system. OCERS is legally and fiscally independent of the County of Orange.

OCERS was established in 1945 under the provisions of the County Employees Retirement Law of 1937. OCERS is governed by a ten-member Board of Retirement, including nine voting members and one alternate member. Board membership consists of four members appointed by the County of Orange Board of Supervisors and five members elected by the members of the pension system – two by the general members, two by the safety members (one voting and one alternate), and one by the retired members. The County of Orange Treasurer-Tax Collector, who is elected by the voters registered in the county, serves as an ex-officio member.

OCERS issues a publicly available financial report that includes financial statements and required supplementary information for the cost-sharing plans that are administered by OCERS. The report can be obtained from OCERS at 2223 Wellington Avenue, Santa Ana, California 92701.

Benefits Provided

OCERS provides retirement, disability, and death benefits to general and safety members. Safety membership includes those members serving in active law enforcement, fire suppression, and as probation officers. General membership applies to all other occupations. Plan retirement benefits are tiered based upon date of OCERS membership. Tier I members were hired prior to September 21, 1979, and use their highest one-year average salary to determine their retirement allowance. Tier II members were hired after September 21, 1979, and use their highest three-year average salary to determine their retirement allowance. Member rate groups are determined by employer, bargaining unit, and benefit plan. The benefit plan represents the benefit formula and tier that will be used in calculating a retirement benefit. All regular employees scheduled to work twenty hours or more per week become members of the plan upon commencing employment with one of OCERS' plan sponsors, with the exception of a provision adopted in 2014 that allows new members over the age of 65 to opt out of the plan. Active members are vested in OCERS upon accumulating five years of accredited service or attaining the age of 70.

On September 12, 2012, California Governor Brown signed Assembly Bill 340, which created the California Public Employees' Pension Reform Act of 2012 (PEPRA) and amended sections of the 1937 Act under which OCERS operates. The law created a benefit tier for new employees entering public agency employment and public retirement system membership, effective January 1, 2013. One of the many changes brought about by PEPRA involved new retirement formulas for newly hired employees who do not establish reciprocity with OCERS. Another change brought about by PEPRA requires employees who do not establish reciprocity to pay 50% of the normal retirement costs from the beginning of their employment.

In general, the retirement benefits received by members are determined by plan formula, age at retirement, years of service, and final average salary. Members are entitled to receive a retirement allowance upon reaching the following years of service and age criteria:

Years of Service Credit	Eligible Age
10 or more	Age 50
5 or more (PEPRA Members)	Age 52
30 or more (General Members)	Any age
20 or more (Safety Members)	Any age
5 or more, and at least 10 years of active employment with a sponsoring agency covered by OCERS (Part-time Members)	Age 55
Any	Age 70

The provisions and benefits provided by OCFA to its safety and general members as of June 30, 2016, are summarized below:

Benefits Provided to Safety Members					
			Representation / Bargaining Unit / Employee Hire Date		
			Orange County Professional Firefighters Association	Orange County Fire Authority Chief Officers Association	Unrepresented
Plan	Tier	Benefit Formula	Firefighter Unit	Fire Management Unit	Executive Management in Safety Positions
E	I	3.0% at 50	Prior to 7/1/2012	Prior to 7/1/2012	Prior to 7/1/2011
F	II	3.0% at 50	Prior to 7/1/2012	Prior to 7/1/2012	Prior to 7/1/2011
R	II	3.0% at 55	On or After 7/1/2012 (with reciprocity)	On or After 7/1/2012 (with reciprocity)	On or After 7/1/2011 (with reciprocity)
V	II	2.7% at 57 (PEPRA)	On or After 1/1/2013 (without reciprocity)	On or After 1/1/2013 (without reciprocity)	On or After 1/1/2013 (without reciprocity)

Benefits Provided to General Members					
			Representation / Bargaining Unit / Employee Hire Date		
			Orange County Employees Association	Orange County Fire Authority Management Association	Unrepresented
Plan	Tier	Benefit Formula	General and Supervisory Management	Administrative Management	Executive Management in General Positions
I	I	2.7% at 55	Prior to 7/1/2011	Prior to 12/1/2012	Prior to 12/1/2012
J	II	2.7% at 55	Prior to 7/1/2011	Prior to 12/1/2012	Prior to 12/1/2012
N	II	2.0% at 55	On or After 7/1/2011 (with reciprocity)	On or After 12/1/2012 (with reciprocity)	On or After 12/1/2012 (with reciprocity)
U	II	2.5% at 67 (PEPRA)	On or After 1/1/2013 (without reciprocity)	On or After 1/1/2013 (without reciprocity)	On or After 1/1/2013 (without reciprocity)

Contributions

Each year, an actuarial valuation is performed for OCERS to determine funding contributions for each agency member within their assigned rate group and plan on an actuarial basis. The actuarially determined rate is the estimated amount necessary to finance the cost of benefits earned by employees during the year, with an additional amount to finance any unfunded actuarial accrued liability (UAAL). The table below summarizes OCFA's required employer contribution rates and employee rates (paid by OCFA) for the year ended June 30, 2016:

Category	Plan	Tier	Benefit Formula	Employer Contribution Rates			Employee Contribution Rates (See Below)
				Normal Cost	UAAL	Total	
Safety	E	I	3.0% at 50	25.86%	24.14%	50.00%	9.70% - 13.74%
Safety	F	II	3.0% at 50	25.86%	24.14%	50.00%	13.32% - 19.75%
Safety	R	II	3.0% at 55	21.70%	24.14%	45.84%	12.72% - 18.86%
Safety	V	II	2.7% at 57 (PEPRA)	16.85%	24.14%	40.99%	13.22% - 21.71%
General	I	I	2.7% at 55	14.06%	23.34%	37.40%	10.46% - 16.32%
General	J	II	2.7% at 55	14.06%	23.34%	37.40%	9.99% - 16.32%
General	N	II	2.0% at 55	14.15%	23.34%	37.49%	7.59% - 13.32%
General	U	II	2.5% at 67 (PEPRA)	9.71%	23.34%	33.05%	7.73% - 13.10%

Employees in each unit have agreed through their respective Memorandums of Understanding or Personnel and Salary Resolution to pay their full employee share of retirement costs, with those employee payments being phased in over three to four years. The retirement payment is deducted from the employee's compensation earnable and continues throughout the employee's entire term of employment with OCFA.

Employee contribution rates vary depending on the individual employee's hire date and unit, and are summarized below for the year ended June 30, 2016.

Employee Hire Date	Benefit Formula	Employee Contribution Rate
Safety – Firefighter Unit		
Prior to 1/1/2011	3.0% at 50	11.0% as of 11/14/2014*
1/1/2011 - 6/30/2012	3.0% at 50	11.0% as of 11/14/2014
On or After 7/1/2012 (with reciprocity)	3.0% at 55	
On or After 1/1/2013 (without reciprocity)	2.7% at 57 (PEPRA)	50% of Normal Cost
Safety – Firefighter Management Unit		
Prior to 1/1/2011	3.0% at 50	9.0% as of 2/7/2014**
1/1/2011 - 6/30/2012	3.0% at 50	9.0% as of 1/1/2011
On or After 7/1/2012 (with reciprocity)	3.0% at 55	9.0% as of 7/1/2012
On or After 1/1/2013 (without reciprocity)	2.7% at 57 (PEPRA)	50% of Normal Cost
Safety – Executive Management		
Prior to 7/1/2011	3.0% at 50	11.0% as of 3/6/2015**
On or After 7/1/2011 (with reciprocity)	3.0% at 55	13.5% as of 3/4/2016**
On or After 1/1/2013 (without reciprocity)	2.7% at 57 (PEPRA)	50% of Normal Cost

General – General and Supervisory Management		
Prior to 7/1/2011	2.7% at 55	9.0% as of 7/1/2014
On or After 7/1/2011 (with reciprocity)	2.0% at 55	11.0% as of 3/7/2015** 13.5% as of 3/6/2016**
On or After 1/1/2013 (without reciprocity)	2.5% at 67 (PEPRA)	50% of Normal Cost
General – Administrative Management		
Prior to 12/1/2012	2.7% at 55	9.0% as of 2/6/2015 12.25% as of 7/10/2015** 14.25% as of 1/8/2016**
On or After 12/1/2012 (with reciprocity)	2.0% at 55	9.0% as of 12/1/2012 12.25% as of 7/10/2015** 14.25% as of 1/8/2016**
On or After 1/1/2013 (without reciprocity)	2.5% at 67 (PEPRA)	50% of Normal Cost
General – Executive Management		
Prior to 12/1/2012	2.7% at 55	11.0% as of 3/6/2015**
On or After 12/1/2012 (with reciprocity)	2.0% at 55	13.5% as of 3/4/2016**
On or After 1/1//2013 (without reciprocity)	2.5% at 67 (PEPRA)	50% of Normal Cost

* *Consists of a 9.0% employee payroll deduction and a 2.0% Healthcare Converted Retirement Contribution credit for savings obtained as a result of modifications to the OCPFA Health Plan Agreement.*

** *Capped at maximum employee contribution*

For the year ended June 30, 2016, employer and employee contributions remitted to OCERS were as follows:

	Employer Contributions	Employee Contributions	Total Contributions
Contributions paid by OCFA	$78,708,605	$ 4,018,311	$82,726,916
Contributions paid by employees	-	12,867,971	12,867,971
Contributions remitted to OCERS	$78,708,605	$16,886,282	$95,594,887

(b) Pension Liabilities, Pension Expenses, and Deferred Outflows/Inflows of Resources Related to Pensions

OCFA's net pension liability with OCERS is measured as the proportionate share of the net pension liability. The net pension liability of each member agency is measured as of December 31, 2015, and the total pension liability for each member agency used to calculate the net pension liability was determined by an actuarial valuation as of December 31, 2014, rolled forward to December 31, 2015, using standard update procedures. OCFA's proportion of the net pension liability was based on a projection of OCFA's long-term share of contributions to the pension plan relative to the projected contributions of all participating agencies, actuarially determined. OCFA's proportionate share of the total OCERS net pension liability as of June 30, 2015 and 2016 was as follows:

	OCFA's Proportionate Share of the Total OCERS Net Pension Liability					
	At June 30, 2015		Increase (Decrease)		At June 30, 2016	
Member Type	Amount	%	Amount	%	Amount	%
Safety	$404,329,372	8.0%	$45,142,651	(0.1%)	$449,472,023	7.9%
General	62,638,951	1.2%	5,558,832	0.0%	68,197,783	1.2%
Total	$466,968,323	9.2%	$50,701,483	(0.1%)	$517,669,806	9.1%

For the year ended June 30 2016, OCFA recognized pension expense of $94,784,899. At June 30, 2016, OCFA reported deferred outflows of resources and deferred inflows of resources related to pensions from the following sources:

	Deferred Outflows of Resources	Deferred Inflows of Resources
Differences between actual and expected experience in the Total Pension Liability	$ -	$ (32,777,639)
Changes in assumptions	24,322,360	(3,041,794)
Net differences between projected and actual earnings on plan investments	83,874,144	-
	108,196,504	(35,819,433)
Employer contributions subsequent to measurement date	30,809,000	-
Total	$139,005,504	$(35,819,433)

Deferred outflows of resources related to contributions subsequent to the measurement date totaling $30,809,000 will be recognized as a reduction of the net pension liability in the year ended June 30, 2017. Other amounts reported as deferred outflows of resources and deferred inflows of resources related to pensions will also be recognized as an adjustment to pension expense as follows:

Year Ended June 30	Amount
2017	$20,387,946
2018	20,387,946
2019	20,387,943
2020	14,824,361
2021	(3,389,107)
2022	(222,018)
Total	$72,377,071

(c) Actuarial Assumptions

The total pension liability in the December 31, 2014, actuarial valuation was determined using the following actuarial assumptions:

	Safety	**General**
Valuation Date	December 31, 2014	
Measurement Date	December 31, 2015, rolled forward on an actuarial basis	
Actuarial Cost Method	Entry age normal	
Actuarial Assumptions:		
• Discount rate	7.25%	
• Inflation	3.00%	
• Investment rate of return	7.25%, net of pension plan investment expense, including inflation	
• Salary increases	"Across the board" real salary increases of 0.50% per year	
• Mortality:		
o Healthy	RP-2000 Combined Healthy Mortality Table projected with Scale BB to 2020 with ages set back two years.	RP-2000 Combined Healthy Mortality Table projected with Scale BB to 2020.
o Disabled	RP-2000 Combined Healthy Mortality Table projected with Scale BB to 2020.	RP-2000 Combined Healthy Mortality Table projected with Scale BB to 2020 with ages set forward six years for males and set forward three years for females.
o Beneficiaries	Beneficiaries are assumed to have the same mortality as a General Member of the opposite sex who is receiving a service (non-disability) retirement.	
o Employee Contribution Rates	RP-2000 Combined Healthy Mortality Table projected with Scale BB to 2020 with ages set back two years weighted 80% male and 20% female.	RP-2000 Combined Healthy Mortality Table projected with Scale BB to 2020 weighted 40% male and 60% female.

The mortality tables shown above were determined to contain sufficient provision appropriate to reasonably reflect future mortality improvement, based on a review of the mortality experience by OCERS, as of December 31, 2015.

Discount Rate

The discount rate used to measure the Total Pension Liability was 7.25% as of December 31, 2015, and December 31, 2014. The projection of cash flows used to determine the discount rate assumed plan member contributions will be made at the current contribution rate and that employer contributions will be made at rates equal to the actuarially determined contribution rates. For this purpose, only employer contributions that are intended to fund benefits for current plan members and their beneficiaries are included. Projected employer contributions that are intended to fund the service costs for future plan members and their beneficiaries, as well as projected contributions from future plan members, are not included.

Based on those assumptions, the pension plan's fiduciary net position was projected to be available to make all projected future benefit payments for current plan members. Therefore, the long-term expected rate of return on pension plan investments was applied to all periods of projected benefit payments to determine the total pension liability as of both December 31, 2015, and December 31, 2014.

The long-term expected rate of return on pension plan investments was determined using a building-block method in which expected future real rates of return (expected returns, net of inflation) are developed for each major asset class. These returns are combined to produce the long-term expected rate of return by weighting the expected future real rates of return by the target asset allocation percentage, adding expected inflation, and subtracting expected investment expenses and a risk margin. The target allocation (approved by the OCERS Retirement Board) and projected arithmetic real rates of return for each major asset class, after deducting inflation but before deducting investment expenses, used in the derivation of the long-term expected investment rate of return assumption are summarized in the following table:

Asset Class	Target Allocation	Long-term Expected Real Rate of Return
Large Cap U.S. Equity	14.90%	5.92%
Small/Mid Cap U.S. Equity	2.73%	6.49%
Developed International Equity	10.88%	6.90%
Emerging International Equity	6.49%	8.34%
Core Bonds	10.00%	0.73%
Global Bonds	2.00%	0.30%
Emerging Market Debt	3.00%	4.00%
Real Estate	10.00%	4.96%
Diversified Credit (U.S. Credit)	8.00%	4.97%
Diversified Credit (Non-U.S. Credit)	2.00%	6.76%
Hedge Funds	7.00%	4.13%
GTAA	7.00%	4.22%
Real Return	10.00%	5.86%
Private Equity	6.00%	9.60%
Total	100.00%	

Sensitivity of the Net Pension Liability to Changes in the Discount Rate

The following presents OCFA's proportionate share of the net pension liability with OCERS, calculated using the discount rate of 7.25%, as well as what OCFA's proportionate share of the net pension liability would be if it were calculated using a discount rate that is one percentage point lower (6.25%) or one percentage point higher (8.25%) than the current rate.

	1% Decrease (6.25%)	Current Discount Rate (7.25%)	1% Increase (8.25%)
Total proportionate share of net pension liability	$749,396,258	$517,669,806	$326,999,958

Pension Plan Fiduciary Net Position

Detailed information about the pension plan's fiduciary net position is available in the separately issued OCERS financial report.

(22) Retirement Plan for Part-Time Employees

(a) General Information about the Plan

Plan Description and Administration

OCFA administers the Extra Help Retirement Plan (Plan), a single-employer defined benefit pension plan that provides retirement benefits for its less than half-time and extra help employees. The Plan was established on January 1, 1997, and is accounted for in the Extra Help Retirement Plan fiduciary fund. The Board establishes and amends all Plan provisions, and has the authority to change contribution rates and investment types. A separate, audited pension plan report is not available.

Benefits Provided

The Plan provides retirement benefits in the form of a lifetime annuity. Retirement benefits for Plan members are calculated at the rate of 2% of career earnings during the first thirty years of credited service. Upon retirement, participants are eligible to receive their benefit either as a lump sum payment or as a monthly payment. If employment with OCFA is terminated prior to retirement and the value of the employee's contributions with interest is $3,500 or less, the employee may receive an immediate lump sum distribution in lieu of any future benefits payable under the Plan. If the value of the terminated employee's contributions with interest exceeds $3,500, the employee may elect to receive a lump sum distribution or leave the contributions on deposit until he or she reaches retirement age.

During the year ended June 30, 2016, lump sum distributions totaling $10,642 were made to thirty-three participants. Currently, there are no participants collecting retirement benefits.

Plan Membership

As of June 30, 2016, Plan membership consisted of the following:

	Balance as of June 30, 2016		
Plan Members (or Beneficiaries)	$3,500 or Less	More than $3,500	Total
Inactive; currently receiving benefits	-	-	-
Inactive; entitled to but not yet receiving benefits	43	4	47
Active	17	-	17
Total plan members	60	4	64

Contributions

All eligible half-time and extra help employees hired on or after January 1, 1997, are required to contribute a percentage of compensation corresponding to an age-based table included in the Plan. Age is determined as attained age on every January 1. Employee contributions rates range from 2.5% to 7.5% based on age. After 30 years of credited service, OCFA is responsible for the employee's Plan contributions.

Employee contributions are credited with 5% interest compounded semi-annually. Any interest earnings credited to the Plan in excess of actual investment earnings are reported as employer contributions.

During the year ended June 30, 2016, employee and employer contributions totaled $8,923 and $2,267, respectively.

(b) Investments

Method Used to Value Investments

Investments are reported at fair value.

Investment Policy

Contributions are deposited into the OCFA's Local Agency Investment Fund (LAIF), which is regulated by California Government Code Section 16429 under the oversight of the Treasurer of the State of California. LAIF is functionally equivalent to a non-SEC regulated government mutual fund invested in fixed income debt securities. LAIF is overseen by the Local Agency Investment Advisory Board which consists of five members, in accordance with State statute.

Concentrations

All Plan assets are invested in the Local Agency Investment Fund, which is reported at fair value of the pool shares.

(c) Net Pension Liability

Net pension liability is measured as the total pension liability, less the pension plan's fiduciary net position. The Plan's net pension liability is measured as of June 30, 2016, using an actuarial valuation as of January 1, 2016, rolled forward to June 30, 2016 using standard update procedures. A summary of components of the Plan's net pension liability as of June 30, 2016, is shown below, followed by principal assumptions and methods used to determine the net pension liability.

Total pension liability	$238,489
Plan fiduciary net position	(74,798)
Net pension liability	$163,691
Plan fiduciary net position as a % of total pension liability	31.4%

Actuarial Assumptions

Actuarial calculations reflect a long-term perspective. Calculations are based on the benefits provided under the terms of the Plan in effect at the time of each valuation and on the pattern of sharing of costs between the OCFA and plan members to that point. Actuarial valuations of an ongoing plan involve estimates of the value of reported amounts and assumptions about the probability of occurrence of events far into the future. Actuarially determined amounts are subject to continual revision as results are compared to past expectations and new estimates are made about the future.

The total pension liability in the January 1, 2016, actuarial valuation was determined using the following actuarial assumptions:

Valuation Date	January 1, 2016
Measurement Date	June 30, 2016, rolled forward on an actuarial basis
Actuarial Cost Method	Entry age normal
Actuarial Assumptions: • Discount rate • Inflation • Salary increases • Investment rate of return • Mortality	 2.90%, net of pension investment expense, including inflation 2.75% 3.00%, including merit, seniority, and inflation Annual salary for the current year is assumed to be equal to the average annual salary over the last 3 years. 2.90% RP-2000 mortality table for combined healthy participants to 2016 for mortality according to Scale BB
Experience study	Given the size of the plan, there was not enough data available to conduct a credible experience study. The assumptions are not anticipated to produce significant cumulative actuarial gains or losses over time. The liabilities and data are analyzed each year in order to identify any trends of experience deviating from the actuarial assumptions.
Form of payment	Participants who have 5 years or less of credited service or have a contribution balance less than or equal to $3,500 are assumed to

Form of payment (Continued)	take an immediate lump sum upon termination or retirement. Participants who have worked more than 5 years or have attained age 55 are assumed to commence a modified cash refund annuity starting at age 65.
Retirement	100% retirement at age 65
Termination	Service / Rate 0 years / 30% 1-3 years / 50% 4 years / 25% 5+ years / 5%
Plan Assets	The employee contributions are deposited into the Authority's LAIF account. The LAIF account is managed by the State Treasurer's Office and is invested in fixed income securities. Quoted market value was used as the fair value of assets.

Discount Rate

The discount rate used to measure the total pension liability was 2.90%. The projection of cash flows used to determine the discount rate assumed that plan member contributions will be made at the current contribution rate and that contributions will be made at rates equal to the difference between actuarially determined contribution rates and the member rate. Based on those assumptions, the Plan's fiduciary net position was projected to be available to make all projected future benefit payments of current plan members. Therefore, the long-term expected rate of return on pension plan investments was applied to all periods of projected benefit payments to determine the total pension liability.

(d) Changes in the Net Pension Liability

Changes in the Plan's net pension liability for the year were as follows:

	Total Pension Liability	Plan Fiduciary Net Position	Net Pension Liability/ (Asset)
Balance at June 30, 2015	$313,389	$73,031	$240,358
Changes in the year:			
Service cost	8,331	-	8,331
Interest	11,865	-	11,865
Difference between actual and expected experience	(131,777)	-	(131,777)
Changes of assumptions	47,323	-	47,323
Contributions – employer	-	2,267	(2,267)
Contributions – plan members	-	8,923	(8,923)
Net investment income	-	1,219	(1,219)
Benefit payments, including refunds of employee contributions	(10,642)	(10,642)	-
Net changes	(74,900)	1,767	(76,667)
Balance at June 30, 2016	$238,489	$74,798	$163,691

Sensitivity of the Net Pension Liability to Changes in the Discount Rate

The following presents the net pension liability, calculated using the discount rate of 2.90%, as well as what the net pension liability would be if it were calculated using a discount rate that is one percentage point lower (1.90%) or one percentage point higher (3.90%) than the current rate:

	1% Decrease (1.90%)	Current Discount Rate (2.90%)	1% Increase (3.90%)
Net pension liability	$233,522	$163,691	$112,652

Pension Plan Fiduciary Net Position

As previously mentioned, the Plan does not issue a separate stand-alone financial report. More detailed information on the Plan's fiduciary net position is presented on pages 43 and 44 of this report.

(e) Pension Expense and Deferred Outflows/Inflows of Resources Related to Pensions

For the year ended June 30 2016, OCFA recognized pension expense of $(15,017). At June 30, 2016, OCFA reported deferred outflows of resources and deferred inflows of resources related to pensions from the following sources:

	Deferred Outflows of Resources	Deferred Inflows of Resources
Differences between actual and expected experience in the Total Pension Liability	$ -	$(92,134)
Changes in assumptions	31,549	-
Net differences between projected and actual earnings on plan investments	1,224	-
	32,773	(92,134)
Employer contributions subsequent to measurement date	2,267	-
Total	$35,040	$(92,134)

Deferred outflows of resources related to contributions subsequent to the measurement date totaling $2,267 will be recognized as a reduction of the net pension liability in the year ended June 30, 2017. All other amounts reported as deferred outflows of resources and deferred inflows of resources related to pensions will also be recognized as an adjustment to pension expense as follows:

Year Ended June 30	Deferred Outflows of Resources	Deferred Inflows of Resources	Net Amount
2017	$16,080	$(48,209)	$(32,129)
2018	16,081	(43,925)	(27,844)
2019	306	-	306
2020	306	-	306
Total	$32,773	$(92,134)	$(59,361)

(23) Defined Benefit Retiree Medical Plan – Other Post-Employment Benefits (OPEB)

(a) Plan Description

OCFA provides a post-employment Retiree Medical Plan (Plan), a single-employer defined benefit plan, for its full-time employees hired prior to January 1, 2007. The Plan, which was established on January 1, 1997, and amended on September 28, 2006, provides a monthly grant toward the cost of retirees' health insurance coverage. The Board establishes and amends all Plan provisions through negotiations with labor bargaining units.

The Plan's assets are held in an irrevocable trust for the exclusive benefit of Plan participants and are administered by the Orange County Employees Retirement System (OCERS). Funds are held in a trust account established pursuant to Section 401(h) of the Internal Revenue Code and are held separate from the assets of the OCERS retirement system, except for investment purposes. A publicly available financial report can be obtained from OCERS at 2223 Wellington Avenue, Santa Ana, California 92701.

Prior to the amendment on September 28, 2006, all Plan activity was accounted for in OCFA's Retiree Medical Fund. Thereafter, plan assets were remitted to OCERS and are no longer reported in the OCFA's financial statements.

All retirees and full-time employees hired prior to January 1, 2007, are eligible to participate in the Plan. Following is a schedule of active Plan participants (excluding any terminated/declined participants) as of June 30 for the current and previous two fiscal years.

As of June 30	Active Employees	Current Retirees and Surviving Spouses	Current Deferred Retirees	Active Plan Participants
2014	697	574	3	1,274
2015	642	624	3	1,269
2016	602	654	3	1,259

(b) Funding Policy

Current, active employees are required to contribute 4% of their pay through payroll deductions to the OCFA. (Prior to September 28, 2006, the required contribution rate was 1% of pay.) OCFA may also periodically remit Plan contributions to the trust administered by OCERS in amounts authorized to be contributed by the Board of Directors.

(c) Benefits

Participating employees who are credited with at least one year of service are eligible to receive Plan benefits upon retirement. A participating employee who terminates employment with the OCFA for reasons other than retirement is eligible to begin receiving Plan benefits at age 55. Participants must be covered under a qualified health plan, Medicare, or a recognized health insurance plan.

The amount of the monthly grant is based on years of credited service and is applied as a credit towards the cost of the retiree's monthly medical insurance premium. For the year ended June 30, 2016, there were 654 eligible retirees and surviving spouses who received monthly benefits aggregating to an annual total of $4,307,015. In addition, there were four deferred retirees who received benefits directly from the OCFA during Fiscal Year 2015/16 totaling $6,790.

(d) Annual OPEB Cost and Net OPEB Obligation/Asset

OCFA's Annual OPEB Cost is equal to the annual required contribution to the Plan, plus an adjustment for the cumulative difference between the Annual OPEB Cost and the OCFA's actual contributions for the year. The cumulative difference is called the Net OPEB Obligation (NOPEBO) (or a Net OPEB Asset if annual required contributions are over-funded). For the year ended June 30, 2016, OCFA's annual OPEB cost was $13,550,385, as determined by an actuarial valuation with a measurement date as of July 1, 2014, and was calculated as follows:

Annual Required Contribution (ARC)	$15,161,649
Interest on the Net OPEB Obligation (NOPEBO)	2,877,656
Actuary's adjustment on the ARC	(4,488,920)
Annual OPEB Cost	$13,550,385

During the year ended June 30, 2016, actual contributions totaled $4,460,115 resulting in an increase to the NOPEBO of $9,090,270 (the difference between the Annual OPEB Cost and actual contributions). The outstanding balance of the NOPEBO as of June 30, 2016, was $66,643,396. Following is a schedule of employer contributions, as well as a calculation of OCFA's Net OPEB Asset (Obligation) for the current and previous two fiscal years.

FYE June 30	Annual OPEB Cost	Actual Contributions	% of Annual OPEB Cost Contributed	Net Increase to Net OPEB Obligation	Cumulative Net OPEB Obligation at June 30
2014	$14,461,381	$4,693,202	32.45%	$9,768,179	$48,085,317
2015	13,704,972	4,237,163	30.92%	9,467,809	57,553,126
2016	13,550,385	4,460,115	32.92%	9,090,270	66,643,396

The Annual OPEB Cost includes an implicit subsidy for safety members under the age of 65. Accordingly, the Actual Contributions also include implicit insurance for the current and previous two fiscal years:

	2016	2015	2014
Amounts irrevocably transferred to OCERS trust:			
Active employees	$2,454,900	$2,601,233	$2,758,828
Retirees and other plan members	939,826	714,338	723,690
Subtotal	3,394,726	3,315,571	3,482,518
Implicit insurance premiums paid on behalf of retirees	1,058,599	916,573	1,205,520
Amounts paid directly to retirees	6,790	5,019	5,164
Total actual contributions	$4,460,115	$4,237,163	$4,693,202

(e) Funded Status and Funding Progress

The following schedule of funding progress shows whether the actuarial value of Plan assets is increasing or decreasing over time relative to the actuarial accrued liabilities for benefits. A required schedule of funding progress immediately following the notes to the financial statements presents multi-year trend information about whether the actuarial value of plan assets is increasing or decreasing relative to the actuarial accrued liability for benefits over time.

As of July 1	(a) Actuarial Value of Assets	(b) Entry Age Actuarial Accrued Liability (AAL)	(b-a) Unfunded AAL (UAAL)	(a/b) Funded Ratio	(c) Covered Payroll	(b-a)/c UAAL as a % of Covered Payroll
2010	$21,549,574	$147,709,326	$126,159,752	14.59%	$81,391,495	155.00%
2012	28,910,090	156,623,184	127,713,094	18.46%	75,432,000	169.31%
2014	36,945,371	179,056,290	142,110,919	20.63%	66,021,000	215.25%

(f) Actuarial Methods and Assumptions

Actuarial calculations reflect a long-term perspective. Calculations are based on the benefits provided under the terms of the Plan in effect at the time of each valuation and on the pattern of sharing of costs between the OCFA and plan members to that point. Actuarial valuations of an ongoing plan involve estimates of the value of reported amounts and assumptions about the probability of occurrence of events far into the future. The funded status of the Plan and the annual required contributions are subject to revision as actual results are compared with past expectations and new estimates are made about the future. The annual required contribution for the year ended June 30, 2016, was determined by an actuarial valuation of the Plan dated July 1, 2014. Unfunded liabilities are amortized over a closed period ending June 30, 2036. The principle assumptions and methods used to determine the annual required contribution were as follows:

Valuation date	July 1, 2014
Actuarial cost method	Entry age normal
Amortization method	30 years beginning July 1, 2006, closed, level dollar
Remaining amortization period	22 years as of July 1, 2014
Asset valuation method	Market value
Actuarial assumptions:	
• Asset rate of return	7.25%
• Discount rate	5.0%, blended using a short-term rate of 4.25% for portion of expected benefits not expected to be paid from contributions and return on assets
• Projected salary increases	N/A
• Wage inflation	3.25%
• Medical trend rates	5.00% - 7.75%
• Increase in retiree medical grant	5.0%
Plan membership:	
• Current retirees and surviving spouses	573
• Current active members	697
• Terminated participants entitled but not yet eligible	13
• Declined	14

(24) Retiree Defined Contribution Healthcare Expense Reimbursement Plan

On September 28, 2006, OCFA created the Orange County Fire Authority Retiree Defined Contribution Healthcare Expense Reimbursement Plan (Plan), an employer-sponsored defined contribution benefit plan. The Plan, which became effective January 1, 2007, provides for the reimbursement of medical, dental, and other healthcare expenses of retirees. The Board establishes and amends all Plan provisions in conjunction with its negotiated labor contracts and is subject to all applicable requirements of the Myers-Milias-Brown Act and any other applicable law. Plan assets are held in trust and administered by Select Account.

All active, full-time employees who became employed by the OCFA on or after January 1, 2007, are required to contribute 4% of their gross pay through payroll deductions to the OCFA. All contributions, investment income, realized and unrealized gains and losses are credited to individual recordkeeping accounts maintained in the name of each Plan participant. Account assets are invested as directed by the participant from among investment funds selected by the OCFA. Participants are eligible to receive Plan benefits upon reaching retirement age, including those who terminate employment with the OCFA for reasons other than retirement. Required and actual employee contributions totaled $1,957,913 for the year ended June 30, 2016.

(25) Short-term Debt

On July 1, 2015, OCFA issued $36,260,000 of 2015-2016 Tax and Revenue Anticipation Notes (TRAN) at an interest rate of 2.00%, for the purpose of financing seasonal cash flow requirements for General Fund expenditures during the fiscal year ending June 30, 2016. The TRAN, plus accrued interest in the amount of $723,186, was repaid on June 30, 2016. Short-term debt activity pertaining to the TRAN was as follows for the year ended June 30, 2016:

	Beginning Balance	Additions	Payments	Ending Balance
Principal	$ -	$36,260,000	$(36,260,000)	$ -
Accrued interest	-	723,186	(723,186)	-
Total	$ -	$36,983,186	$(36,983,186)	$ -

Required Supplementary Information

OCERS Retirement Plan
OCFA participates in the Orange County Employees Retirement System (OCERS), a cost-sharing multiple-employer, defined benefit pension plan that provides retirement, disability, and death benefits to general and safety members.

Extra Help Retirement Plan
OCFA administers a single-employer, defined benefit pension plan that provides retirement benefits for OCFA's less than half-time and extra help employees. Plan assets are accounted for in the Extra Help Retirement fiduciary fund.

Retiree Medical Plan
OCFA provides a single-employer, defined benefit plan for OCFA's full-time employees hired prior to January 1, 2007, which provides a monthly grant toward the cost of retirees' health insurance coverage. Plan assets are held in an irrevocable trust for the exclusive benefit of Plan participants and are administered by the Orange County Employees Retirement System (OCERS).

This Page Intentionally Left Blank

ORANGE COUNTY FIRE AUTHORITY

OCERS Retirement Plan
A Cost-Sharing, Multiple-Employer Defined Benefit Pension Plan
As of June 30, 2016
Last Ten Fiscal Years (A)

Schedule of OCFA's Proportionate Share of the Net Pension Liability

	Fiscal Year Ended		
	June 30, 2014	**June 30, 2015**	**June 30, 2016**
OCFA's proportion of the net pension liability	8.37%	9.19%	9.06%
OCFA's proportionate share of the net pension liability	$ 442,651,348	$ 466,968,323	$ 517,669,806
OCFA's covered payroll	$ 129,689,221	$ 129,187,729	$ 129,452,647
OCFA's proportionate share of the net pension liability as a percentage of covered payroll	341.32%	361.46%	399.89%
OCFA's proportionate share of plan fiduciary net position as a percentage of proportionate share of the total pension liability	69.66%	70.35%	68.90%
Plan's fiduciary net position	$ 10,821,318,000	$ 11,536,106,000	$ 11,657,318,000
Plan's fiduciary net position as a percentage of the total pension liability	67.16%	69.42%	67.10%

Notes to Schedule:

(A) Fiscal year ended June 30, 2015 was the first year of implementation; therefore only three years of data are available for presentation. Other years will be added as they become available

ORANGE COUNTY FIRE AUTHORITY

OCERS Retirement Plan
A Cost-Sharing, Multiple-Employer Defined Benefit Pension Plan
As of June 30, 2016
Last Ten Fiscal Years

Schedule of Contributions

	Fiscal Year Ended			
	June 30, 2007	**June 30, 2008**	**June 30, 2009**	**June 30, 2010**
Required contributions (actuarially determined)	$ 33,753,068	$ 35,709,526	$ 37,183,082	$ 42,331,507
Actual contributions	33,753,068	35,709,526	37,183,082	42,331,507
Contribution excess (deficiency)	$ -	$ -	$ -	$ -
Covered payroll	$ 95,823,423	$ 100,313,038	$ 104,571,731	$ 106,718,627
Actual contributions as a percentage of covered payroll	35.22%	35.60%	35.56%	39.67%
Notes to Schedule:				
Valuation dates (D)	12/31/2004	12/31/2005	12/31/2006	12/31/2007
Actuarial cost method	Entry Age	Entry Age	Entry Age	Entry Age
Amortization method	Level % of Pay	Level % of Pay	Level % of Pay	Level % of Pay
Assumed payroll growth	3.50%	3.50%	3.50%	3.50%
Remaining amortization period:				
Closed amortization of balance	30 years	29 years	28 years	27 years
As of	12/31/2004	12/31/2004	12/31/2004	12/31/2004
Asset valuation method	Market value	Market value	Market value	Market value
Investment rate of return	7.75%	7.75%	7.75%	7.75%
Inflation	3.50%	3.50%	3.50%	3.50%
Real salary increases	0.00%	0.00%	0.00%	0.00%
Projected salary increases:				
Safety	3.50%-9.50%	3.50%-9.50%	3.50%-9.50%	4.50%-13.50%
General	4.10%-10.50%	4.10%-10.50%	4.10%-10.50%	4.50%-11.50%
Cost of living adjustments	3.00%	3.00%	3.00%	3.00%
Retirement age	50-70 years	50-70 years	50-70 years	50-70 years
Mortality	(B)	(B)	(B)	(C)

(A) 1983 Group Annuity Table

(B) 1994 Group Annuity Mortality Table

(C) RP-2000 Combined Healthy Mortality Table

(D) Rates are effective 18 months after the valuation date for the fiscal year that begins July 1.

June 30, 2011	June 30, 2012	June 30, 2013	June 30, 2014	June 30, 2015	June 30, 2016
$ 45,543,856	$ 55,756,764	$ 61,206,670	$ 57,795,043	$ 66,186,858	$ 67,315,414
45,543,856	55,756,764	61,206,670	63,030,796	87,563,156	82,726,916
$ -	$ -	$ -	$ 5,235,753	$ 21,376,298	$ 15,411,502
$ 107,268,263	$ 111,444,130	$ 128,121,447	$ 125,869,628	$ 128,215,528	$ 132,248,620
42.46%	50.03%	47.77%	50.08%	68.29%	62.55%
12/31/2008	12/31/2009	12/31/2010	12/31/2011	12/31/2012	12/31/2013
Entry Age	Entry Age	Entry Age	Entry Age	Entry Age	Entry Age
Level % of Pay	Level % of Pay	Level % of Pay	Level % of Pay	Level % of Pay	Level % of Pay
3.50%	3.50%	3.50%	3.75%	3.75%	3.75%
26 years	25 years	24 years	23 years	22 years	20 years
12/31/2004	12/31/2004	12/31/2004	12/31/2004	12/31/2004	12/31/2012
Market value	Market value	Market value	Market value	Market value	Market value
7.75%	7.75%	7.75%	7.75%	7.25%	7.25%
3.50%	3.50%	3.50%	3.50%	3.25%	3.25%
0.00%	0.00%	0.00%	0.25%	0.50%	0.50%
4.50%-13.50%	4.50%-13.50%	4.50%-13.50%	4.75%-17.75%	4.75%-17.75%	4.75%-17.75%
4.50%-11.50%	4.50%-11.50%	4.50%-11.50%	4.75%-13.75%	4.75%-13.75%	4.75%-13.75%
3.00%	3.00%	3.00%	3.00%	3.00%	3.00%
50-70 years	50-70 years	50-70 years	50-75 years	50-75 years	49-75 years
(C)	(C)	(C)	(C)	(C)	(C)

ORANGE COUNTY FIRE AUTHORITY

Extra Help Retirement Plan
A Single-Employer Defined Benefit Pension Plan
As of June 30, 2016
For the Last Ten Fiscal Years (A)

Schedule of Changes in Net Pension Liability and Related Ratios

	Fiscal Year Ended		
	June 30, 2014	**June 30, 2015**	**June 30, 2016**
Total pension liability:			
Service cost	$ 8,030	$ -	$ 8,331
Interest	11,484	-	11,865
Differences between expected and actual experience	(3,269)	9,728	(131,777)
Changes of assumptions	-	-	47,323
Benefit payments, including refunds of member contributions	(8,676)	(6,459)	(10,642)
Net change in total pension liability	**7,569**	**3,269**	**(74,900)**
Total pension liability - beginning	302,551	310,120	313,389
Total pension liability - ending (a)	**310,120**	**313,389**	**238,489**
Plan fiduciary net position:			
Contributions - employer	2,117	2,481	2,267
Contributions - plan members	13,542	11,831	8,923
Net investment income	586	714	1,219
Benefit payments, including refunds of member contributions	(8,676)	(6,459)	(10,642)
Net change in plan fiduciary net position	**7,569**	**8,567**	**1,767**
Total pension net position - beginning	56,895	64,464	73,031
Total pension net position - ending (b)	**64,464**	**73,031**	**74,798**
Net pension liability - ending (a - b)	**$ 245,656**	**$ 240,358**	**$ 163,691**
Plan fiduciary net position as a % of the total pension liability	20.79%	23.30%	31.36%
Covered payroll	$ 205,340	$ 205,340	$ 108,526
Net pension liability as a % of covered payroll	119.63%	117.05%	150.83%
Employer contributions:			
Required and actual contributions	$ 2,117	$ 2,481	$ 2,267
Actual contributions as a % of required contributions	100.00%	100.00%	100.00%

Notes to Schedule:

(A) GASB Statements No. 67 and No. 68 were implemented during Fiscal Year 2013/14 and Fiscal Year 2014/15, respectively. Additional years will be added to this schedule as they become available in the future.

ORANGE COUNTY FIRE AUTHORITY

Extra Help Retirement Plan
A Single-Employer Defined Benefit Pension Plan
As of June 30, 2016
Last Three Actuarial Valuations (A)

Schedule of Funding Progress

	Actuarial Valuation Dated January 1, 2014	Actuarial Valuation Dated January 1, 2016
Total pension liability	$ 313,389	$ 238,489
Total pension net position	64,464	74,798
Net pension liability (NPL)	$ 248,925	$ 163,691
Funded ratio	20.57%	31.36%
Covered payroll	$ 205,340	$ 108,526
NPL as a percentage of covered payroll	121.23%	150.83%

Notes to Schedule:

	Actuarial Valuation Dated January 1, 2014	Actuarial Valuation Dated January 1, 2016
Changes in size or composition of plan members:		
Inactive; currently receiving benefits	-	-
Inactive; entitled to but not yet receiving benefits	10	49
Active	53	19
Total plan members	63	68
Change in assumptions:		
Discount rate	3.75%	2.90%
Inflation	3.00%	2.75%

(A) GASB Statements No. 67 and No. 68 were implemented during Fiscal Year 2013/14 and Fiscal Year 2014/15, respectively. The actuarial valuation dated January 1, 2014, was the first actuarial valuation completed for the plan. Additional years will be added to this schedule as they become available in the future.

ORANGE COUNTY FIRE AUTHORITY

Extra Help Retirement Plan
A Single-Employer Defined Benefit Pension Plan
As of June 30, 2016
For the Last Ten Fiscal Years (A)

Schedule of Investment Returns

	Fiscal Year Ended		
	June 30, 2014	June 30, 2015	June 30, 2016
Annual money-weighted rate of return, net of investment expense	0.97%	1.24%	1.66%

Notes to Schedule:

(A) GASB Statement No. 67, which requires ten years of history for this schedule, was implemented during Fiscal Year 2013/14. Additional years will be added as they become available in the future.

(B) OCFA also reports the OCERS Retirement Plan, a cost-sharing, multiple-employer defined benefit pension plan. OCERS issues a publicly available financial report that includes ten-year information regarding that Plan's money-weighted rate of return on pension plan investments. The separate OCERS report can be obtained from OCERS at 2223 Wellington Avenue, Santa Ana, California 92701.

ORANGE COUNTY FIRE AUTHORITY

Retiree Medical Plan
A Single-Employer Defined Benefit Plan
As of June 30, 2016
Last Three Actuarial Valuations

Schedule of Funding Progress

	Actuarial Valuation Dated		
	July 1, 2010	**July 1, 2012**	**July 1, 2014**
Entry age actuarial accrued liability (AAL)	$147,709,326	$156,623,184	$179,056,290
Actuarial value of assets	21,549,574	28,910,090	36,945,371
Unfunded AAL (UAAL)	$ 126,159,752	$ 127,713,094	$ 142,110,919
Funded ratio	14.59%	18.46%	20.63%
Covered payroll	$ 81,391,495	$ 75,432,000	$ 66,021,000
UAAL as a percentage of covered payroll	155.00%	169.31%	215.25%

Notes to Schedule:

	Actuarial Valuation Dated		
	July 1, 2010	July 1, 2012	July 1, 2014
Changes in size or composition of plan members:			
Current retirees and surviving spouses	388	471	573
Current active members	896	804	697
Terminated participants entitled but not yet eligible	5	9	13
Declined	n/a	13	14
	1,289	1,297	1,297

ORANGE COUNTY FIRE AUTHORITY

Retiree Medical Plan
A Single-Employer Defined Benefit Plan
As of June 30, 2016
Last Three Fiscal Years

Schedule of Contributions from the Employer and Other Contributing Entities

	Fiscal Year Ended		
	June 30, 2014	**June 30, 2015**	**June 30, 2016**
Annual required contribution (ARC)	$14,560,117	$14,953,772	$15,161,649
Interest on Net OPEB Obligation (NOPEBO)	2,135,737	2,404,266	2,877,656
Actuary's adjustment on the ARC	(2,234,473)	(3,653,066)	(4,488,920)
Annual OPEB cost	$14,461,381	$13,704,972	$13,550,385
Actual contributions	4,693,202	4,237,163	4,460,115
Net increase to Net OPEB obligation	$ 9,768,179	$ 9,467,809	$ 9,090,270
Actual contributions as a percentage of ARC	32.23%	28.34%	29.42%

Notes to Schedule:

Changes in assumptions: The discount rate changed per the table below.

	Actuarial Valuation Dated		
	July 1, 2012	July 1, 2014	July 1, 2014
Discount rate	5.50%	5.00%	5.00%

Major Governmental Funds

Capital Projects Funds

Communications and Information Systems
This fund is used to account for the significant acquisition, improvement, or replacement of specialized communications and information technology systems and/or equipment.

Fire Apparatus
This fund is used to account for the significant acquisition, improvement, or replacement of fire apparatus, including vehicles, trailers, and helicopters.

Fire Stations and Facilities
This fund is used to account for the significant acquisition, improvement, replacement, or construction of fire stations and facilities.

ORANGE COUNTY FIRE AUTHORITY
Communications and Information Systems
Budgetary Comparison Schedule
Year ended June 30, 2016
(With Comparative Data for Prior Year)

	2016				2015
	Budget Amounts		Actual	Variance with Final Budget Positive	Actual
	Original	Final	Amounts	(Negative)	Amounts
Budgetary fund balance, July 1	**$ 18,655,855**	**$ 18,655,855**	**$ 18,655,855**	**$ -**	**$ 18,051,752**
Resources (inflows):					
Use of money and property	169,956	91,196	111,865	20,669	57,488
Miscellaneous	-	312,605	312,605	-	253,528
Transfers in	2,127,821	78,187	78,187	-	3,000,906
Total resources (inflows)	**2,297,777**	**481,988**	**502,657**	**20,669**	**3,311,922**
Amounts available for appropriations	**20,953,632**	**19,137,843**	**19,158,512**	**20,669**	**21,363,674**
Charges to appropriation (outflows):					
Services and supplies	-	-	84,845	(84,845)	132,460
Capital outlay	6,625,685	1,794,533	71,395	1,723,138	1,441,647
Transfers out	-	-	-	-	1,133,712
Total charges to appropriations	**6,625,685**	**1,794,533**	**156,240**	**1,638,293**	**2,707,819**
Budgetary fund balance, June 30	**$ 14,327,947**	**$ 17,343,310**	**$ 19,002,272**	**$ 1,658,962**	**$ 18,655,855**

ORANGE COUNTY FIRE AUTHORITY
Fire Apparatus
Budgetary Comparison Schedule
Year ended June 30, 2016
(With Comparative Data for Prior Year)

	2016				2015
	Budget Amounts		Actual	Variance with Final Budget Positive	Actual
	Original	Final	Amounts	(Negative)	Amounts
Budgetary fund balance, July 1	**$ 25,440,432**	**$ 25,440,432**	**$ 25,440,432**	**$ -**	**$ 29,496,881**
Resources (inflows):					
Charges for services	1,428,656	1,428,656	1,421,540	(7,116)	1,381,161
Use of money and property	221,456	97,876	131,954	34,078	87,984
Miscellaneous	-	191,832	191,832	-	155,579
Developer contributions	1,576,744	1,576,744	-	(1,576,744)	527,289
Total resources (inflows)	**3,226,856**	**3,295,108**	**1,745,326**	**(1,549,782)**	**2,152,013**
Amounts available for appropriations	**28,667,288**	**28,735,540**	**27,185,758**	**(1,549,782)**	**31,648,894**
Charges to appropriation (outflows):					
Services and supplies	-	-	248	(248)	3,072
Capital outlay	15,510,454	17,042,593	3,201,526	13,841,067	3,673,667
Principal retirement	2,276,963	2,336,279	2,336,279	-	2,276,963
Interest and fiscal charges	254,760	195,444	195,444	-	254,760
Total charges to appropriations	**18,042,177**	**19,574,316**	**5,733,497**	**13,840,819**	**6,208,462**
Budgetary fund balance, June 30	**$ 10,625,111**	**$ 9,161,224**	**$ 21,452,261**	**$ 12,291,037**	**$ 25,440,432**

ORANGE COUNTY FIRE AUTHORITY
Fire Stations and Facilities
Budgetary Comparison Schedule
Year ended June 30, 2016
(With Comparative Data for Prior Year)

	2016				2015
	Budget Amounts		Actual	Variance with Final Budget Positive	Actual
	Original	Final	Amounts	(Negative)	Amounts
Budgetary fund balance, July 1	**$ 12,520,242**	**$ 12,520,242**	**$ 12,520,242**	**$ -**	**$ 15,409,887**
Resources (inflows):					
Use of money and property	220,188	65,619	74,414	8,795	44,075
Miscellaneous	-	185,165	185,165	-	150,172
Developer contributions	-	2,112,282	3,233,082	1,120,800	7,779,918
Total resources (inflows)	**220,188**	**2,363,066**	**3,492,661**	**1,129,595**	**7,974,165**
Amounts available for appropriations	**12,740,430**	**14,883,308**	**16,012,903**	**1,129,595**	**23,384,052**
Charges to appropriation (outflows):					
Services and supplies	854,248	906,077	53,433	852,644	37,696
Capital outlay	-	-	100,823	(100,823)	10,826,114
Total charges to appropriations	**854,248**	**906,077**	**154,256**	**751,821**	**10,863,810**
Budgetary fund balance, June 30	**$ 11,886,182**	**$ 13,977,231**	**$ 15,858,647**	**$ 1,881,416**	**$ 12,520,242**

This Page Intentionally Left Blank

ORANGE COUNTY FIRE AUTHORITY
Components of General Fund
Combining Balance Sheet
June 30, 2016
(With Comparative Data for Prior Year)

	General Operating Fund	General Fund CIP	Structural Fire Entitlement
Assets:			
Cash and investments	$ 41,784,650	$ 4,903,086	$ 608,903
Receivables:			
Accounts, net	2,442,570	-	-
Accrued interest	84,882	-	348
Prepaid costs and other assets	36,753,344	35,912	-
Due from other governments, net	10,050,255	-	-
	$ 91,115,701	**$ 4,938,998**	**$ 609,251**
Liabilities:			
Accounts payable	$ 2,143,427	$ 177,863	$ 24,787
Accrued liabilities	14,824,059	-	-
Unearned revenue	33,116	-	-
Due to other governments	123,047	-	-
Total Liabilities	**17,123,649**	**177,863**	**24,787**
Deferred Inflows of Resources:			
Unavailable revenue	-	-	-
Total Deferred Inflows of Resources	**-**	**-**	**-**
Fund Balances:			
Nonspendable - prepaid costs	36,743,933	35,912	-
Restricted for:			
Operations Department	13,867	-	-
Committed to - SFF cities enhancements	-	-	584,464
Assigned to:			
Capital improvement program	-	4,668,314	-
Workers' compensation	-	-	-
Executive Management	36,690	-	-
Operations Department	51,484	-	-
Community Risk Reduction Department	15,845	-	-
Business Services Department	162,699	-	-
Support Services Department	119,743	-	-
Organizational Planning Department	21,000	-	-
Facilities projects	69,987	-	-
Communications and IT projects	-	56,909	-
Unassigned	36,756,804	-	-
Total Fund Balances	**73,992,052**	**4,761,135**	**584,464**
Total Liabilities, Deferred Inflows of Resources, and Fund Balances	**$ 91,115,701**	**$ 4,938,998**	**$ 609,251**

Self Insurance	Eliminations	Total General Fund 2016	Total General Fund 2015
$ 74,053,775	$ -	$ 121,350,414	$ 109,157,641
-	-	2,442,570	2,552,672
40,476	-	125,706	27,902
-	-	36,789,256	31,127,148
-	-	10,050,255	6,967,289
$ 74,094,251	**$ -**	**$ 170,758,201**	**$ 149,832,652**
$ 374,197	$ -	$ 2,720,274	$ 3,106,977
-	-	14,824,059	12,828,886
-	-	33,116	3,234,898
-	-	123,047	10,072,547
374,197	**-**	**17,700,496**	**29,243,308**
-	-	-	316,087
-	**-**	**-**	**316,087**
-	-	36,779,845	31,127,148
-	-	13,867	55,538
-	-	584,464	691,265
-	-	4,668,314	233,180
73,720,054	-	73,720,054	68,494,796
-	-	36,690	98,415
-	-	51,484	46,859
-	-	15,845	354
-	-	162,699	66,963
-	-	119,743	207,784
-	-	21,000	33,890
-	-	69,987	52,061
-	-	56,909	48,528
-	-	36,756,804	19,116,476
73,720,054	**-**	**153,057,705**	**120,273,257**
$ 74,094,251	**$ -**	**$ 170,758,201**	**$ 149,832,652**

ORANGE COUNTY FIRE AUTHORITY
Components of General Fund
Combining Schedule of Revenues, Expenditures and Changes in Fund Balances
Year ended June 30, 2016
(With Comparative Data for Prior Year)

	General Operating Fund	General Fund CIP	Structural Fire Entitlement
Revenues:			
Taxes	$ 219,840,417	$ -	$ -
Intergovernmental	25,978,081	-	-
Charges for services	102,408,896	-	-
Use of money and property	961,795	-	3,511
Miscellaneous	2,096,571	-	-
Total Revenues	**351,285,760**	**-**	**3,511**
Expenditures:			
Current - public safety:			
Salaries and benefits	307,143,676	-	-
Services and supplies	27,411,361	751,308	110,312
Capital outlay	298,162	324,744	-
Debt service:			
Interest and fiscal charges	740,437	-	-
Total Expenditures	**335,593,636**	**1,076,052**	**110,312**
Excess (deficiency) of revenues over (under) expenditures	15,692,124	(1,076,052)	(106,801)
Other financing sources (uses):			
Transfers in	-	5,438,793	-
Transfers out	(5,516,980)	-	-
Sale of capital and other assets	24,470	-	-
Insurance recoveries	121,288	-	-
Total Other Financing Sources (uses)	**(5,371,222)**	**5,438,793**	**-**
Net change in fund balances	10,320,902	4,362,741	(106,801)
Fund balances, beginning of year, as restated	63,671,150	398,394	691,265
Fund balances, end of year	**$ 73,992,052**	**$ 4,761,135**	**$ 584,464**

Self Insurance	Eliminations	Total General Fund 2016	Total General Fund 2015
$ -	$ -	$ 219,840,417	$ 205,141,237
-	-	25,978,081	23,565,214
12,729,592	(12,729,592)	102,408,896	100,619,516
387,777	-	1,353,083	651,975
-	-	2,096,571	1,120,697
13,117,369	**(12,729,592)**	**351,677,048**	**331,098,639**
-	(12,729,592)	294,414,084	285,988,997
7,892,111	-	36,165,092	40,317,142
-	-	622,906	703,370
-	-	740,437	330,741
7,892,111	**(12,729,592)**	**331,942,519**	**327,340,250**
5,225,258	-	19,734,529	3,758,389
-	(5,438,793)	-	3,844,414
-	5,438,793	(78,187)	(3,000,906)
-	-	24,470	134,123
-	-	121,288	32,948
-	**-**	**67,571**	**1,010,579**
5,225,258	-	19,802,100	4,768,968
68,494,796	-	133,255,605	115,504,289
$ 73,720,054	**$ -**	**$ 153,057,705**	**$ 120,273,257**

ORANGE COUNTY FIRE AUTHORITY
Components of General Fund
Combining Original Budget
Year ended June 30, 2016

	General Operating Fund	General Fund CIP	Structural Fire Entitlement	Self Insurance	Eliminations	Total General Fund 2016
Budgetary fund balance, July 1	**$ 63,671,150**	**$ 398,394**	**$ 691,265**	**$ 68,494,796**	**$ -**	**$ 133,255,605**
Resources (inflows):						
Taxes	214,445,545	-	-	-	-	214,445,545
Intergovernmental	14,942,177	-	-	-	-	14,942,177
Charges for services	101,969,304	-	-	12,729,592	(12,729,592)	101,969,304
Use of money and property	658,828	-	11,999	887,704	-	1,558,531
Miscellaneous	1,008,733	-	-	-	-	1,008,733
Transfers in	-	5,234,000	-	-	(5,234,000)	-
Sale of capital and other assets	50,000	-	-	-	-	50,000
Total resources (inflows)	**333,074,587**	**5,234,000**	**11,999**	**13,617,296**	**(17,963,592)**	**333,974,290**
Amounts available for appropriations	**396,745,737**	**5,632,394**	**703,264**	**82,112,092**	**(17,963,592)**	**467,229,895**
Charges to appropriation (outflows):						
Salaries and benefits	290,154,202	-	-	-	(12,729,592)	277,424,610
Services and supplies	35,053,663	1,242,528	-	7,702,911	-	43,999,102
Capital outlay	236,504	4,040,000	-	-	-	4,276,504
Interest and fiscal charges	318,050	-	-	-	-	318,050
Transfers out	7,361,821	-	-	-	(5,234,000)	2,127,821
Total charges to appropriations	**333,124,240**	**5,282,528**	**-**	**7,702,911**	**(17,963,592)**	**328,146,087**
Budgetary fund balance, June 30	**$ 63,621,497**	**$ 349,866**	**$ 703,264**	**$ 74,409,181**	**$ -**	**$ 139,083,808**

ORANGE COUNTY FIRE AUTHORITY
Components of General Fund
Combining Final Budget
Year ended June 30, 2016

	General Operating Fund	General Fund CIP	Structural Fire Entitlement	Self Insurance	Eliminations	Total General Fund 2016
Budgetary fund balance, July 1	**$ 63,671,150**	**$ 398,394**	**$ 691,265**	**$ 68,494,796**	**$ -**	**$ 133,255,605**
Resources (inflows):						
Taxes	218,156,295	-	-	-	-	218,156,295
Intergovernmental	23,926,860	-	-	-	-	23,926,860
Charges for services	101,173,891	-	-	12,729,592	(12,729,592)	101,173,891
Use of money and property	689,516	-	2,921	315,984	-	1,008,421
Miscellaneous	2,203,027	-	-	-	-	2,203,027
Transfers in	-	5,438,793	-	-	(5,438,793)	-
Sale of capital and other assets	50,480	-	-	-	-	50,480
Insurance recoveries	79,433	-	-	-	-	79,433
Total resources (inflows)	**346,279,502**	**5,438,793**	**2,921**	**13,045,576**	**(18,168,385)**	**346,598,407**
Amounts available for appropriations	**409,950,652**	**5,837,187**	**694,186**	**81,540,372**	**(18,168,385)**	**479,854,012**
Charges to appropriations (outflows):						
Salaries and benefits	309,677,422	-	-	-	(12,729,592)	296,947,830
Services and supplies	30,433,960	1,423,143	85,524	7,702,911	-	39,645,538
Capital outlay	590,562	4,064,178	-	-	-	4,654,740
Interest and fiscal charges	754,436	-	-	-	-	754,436
Transfers out	5,516,980	-	-	-	(5,438,793)	78,187
Total charges to appropriations	**346,973,360**	**5,487,321**	**85,524**	**7,702,911**	**(18,168,385)**	**342,080,731**
Budgetary fund balance, June 30	**$ 62,977,292**	**$ 349,866**	**$ 608,662**	**$ 73,837,461**	**$ -**	**$ 137,773,281**

This Page Intentionally Left Blank

LSL
CPAs AND ADVISORS

INDEPENDENT AUDITORS' REPORT ON INTERNAL CONTROL OVER FINANCIAL REPORTING AND ON COMPLIANCE AND OTHER MATTERS BASED ON AN AUDIT OF FINANCIAL STATEMENTS PERFORMED IN ACCORDANCE WITH *GOVERNMENT AUDITING STANDARDS*

To the Board of Directors
Orange County Fire Authority
Irvine, California

We have audited, in accordance with the auditing standards generally accepted in the United States of America and the standards applicable to financial audits contained in *Government Auditing Standards* issued by the Comptroller General of the United States, the financial statements of the governmental activities, the discretely presented component unit, each major fund, and the aggregate remaining fund information of Orange County Fire Authority, (the "Authority") as of and for the year ended June 30, 2016, and the related notes to the financial statements, which collectively comprise the Authority's basic financial statements, and have issued our report thereon dated September 30, 2016.

Internal Control over Financial Reporting

In planning and performing our audit of the financial statements, we considered the Authority's internal control over financial reporting (internal control) to determine the audit procedures that are appropriate in the circumstances for the purpose of expressing our opinions on the financial statements, but not for the purpose of expressing an opinion on the effectiveness of Authority's internal control. Accordingly, we do not express an opinion on the effectiveness of Authority's internal control.

A *deficiency in internal control* exists when the design or operation of a control does not allow management or employees, in the normal course of performing their assigned functions, to prevent, or detect and correct, misstatements on a timely basis. A *material weakness* is a deficiency, or a combination of deficiencies, in internal control, such that there is a reasonable possibility that a material misstatement of the entity's financial statements will not be prevented, or detected and corrected on a timely basis. A *significant deficiency* is a deficiency, or a combination of deficiencies, in internal control that is less severe than a material weakness, yet important enough to merit attention by those charged with governance.

Our consideration of internal control was for the limited purpose described in the first paragraph of this section and was not designed to identify all deficiencies in internal control that might be material weaknesses or, significant deficiencies. Given these limitations, during our audit we did not identify any deficiencies in internal control that we consider to be material weaknesses. However, material weaknesses may exist that have not been identified.

Compliance and Other Matters

As part of obtaining reasonable assurance about whether Authority's financial statements are free from material misstatement, we performed tests of its compliance with certain provisions of laws, regulations, contracts, and grant agreements, noncompliance with which could have a direct and material effect on the determination of financial statement amounts. However, providing an opinion on compliance with those provisions was not an objective of our audit, and accordingly, we do not express such an opinion. The results of our tests disclosed no instances of noncompliance or other matters that are required to be reported under *Government Auditing Standards*.

LSL

CPAs AND ADVISORS

To the Board of Directors
Orange County Fire Authority
Irvine, California

Purpose of this Report

The purpose of this report is solely to describe the scope of our testing of internal control and compliance and the results of that testing, and not to provide an opinion on the effectiveness of the Authority's internal control or on compliance. This report is an integral part of an audit performed in accordance with *Government Auditing Standards* in considering the Authority's internal control and compliance. Accordingly, this communication is not suitable for any other purpose.

Lance, Soll & Lunghard, LLP

Brea, California
September 30, 2016

Attachment 4

ORANGE COUNTY FIRE AUTHORITY

SINGLE AUDIT REPORT

JUNE 30, 2016

ORANGE COUNTY FIRE AUTHORITY

SINGLE AUDIT REPORT

JUNE 30, 2016

ORANGE COUNTY FIRE AUTHORITY

SINGLE AUDIT REPORT

JUNE 30, 2016

TABLE OF CONTENTS

Page Number

Independent Auditors' Report on Internal Control Over Financial Reporting and on Compliance and Other Matters Based on an Audit of Financial Statements Performed in Accordance with *Government Auditing Standards* 1

Independent Auditors' Report on Compliance for Each Major Federal Program; Report on Internal Control Over Compliance; and Report on Schedule of Expenditures of Federal Awards Required by the Uniform Guidance 3

Schedule of Expenditures of Federal Awards for the Fiscal Year Ended June 30, 2016 6

Notes to the Schedule of Expenditures of Federal Awards 7

Schedule of Findings and Questioned Costs for the Fiscal Year Ended June 30, 2016 8

Schedule of Prior Year Findings and Questioned Costs for the Fiscal Year Ended June 30, 2015 10

LSL

CPAs AND ADVISORS

INDEPENDENT AUDITORS' REPORT ON INTERNAL CONTROL
OVER FINANCIAL REPORTING AND ON COMPLIANCE AND OTHER MATTERS
BASED ON AN AUDIT OF FINANCIAL STATEMENTS PERFORMED IN ACCORDANCE
WITH *GOVERNMENT AUDITING STANDARDS*

To the Board of Directors
Orange County Fire Authority
Irvine, California

We have audited, in accordance with the auditing standards generally accepted in the United States of America and the standards applicable to financial audits contained in *Government Auditing Standards* issued by the Comptroller General of the United States, the financial statements of the governmental activities, the discretely presented component unit, each major fund, and the aggregate remaining fund information of Orange County Fire Authority, ("OCFA") as of and for the year ended June 30, 2016, and the related notes to the financial statements, which collectively comprise OCFA's basic financial statements, and have issued our report thereon dated September 30, 2016.

Internal Control over Financial Reporting

In planning and performing our audit of the financial statements, we considered OCFA's internal control over financial reporting (internal control) to determine the audit procedures that are appropriate in the circumstances for the purpose of expressing our opinions on the financial statements, but not for the purpose of expressing an opinion on the effectiveness of OCFA's internal control. Accordingly, we do not express an opinion on the effectiveness of OCFA's internal control.

A *deficiency in internal control* exists when the design or operation of a control does not allow management or employees, in the normal course of performing their assigned functions, to prevent, or detect and correct, misstatements on a timely basis. A *material weakness* is a deficiency, or a combination of deficiencies, in internal control, such that there is a reasonable possibility that a material misstatement of the entity's financial statements will not be prevented, or detected and corrected on a timely basis. A *significant deficiency* is a deficiency, or a combination of deficiencies, in internal control that is less severe than a material weakness, yet important enough to merit attention by those charged with governance.

Our consideration of internal control was for the limited purpose described in the first paragraph of this section and was not designed to identify all deficiencies in internal control that might be material weaknesses or, significant deficiencies. Given these limitations, during our audit we did not identify any deficiencies in internal control that we consider to be material weaknesses. However, material weaknesses may exist that have not been identified.

LSL
CPAs AND ADVISORS

To the Board of Directors
Orange County Fire Authority
Irvine, California

Compliance and Other Matters

As part of obtaining reasonable assurance about whether OCFA's financial statements are free from material misstatement, we performed tests of its compliance with certain provisions of laws, regulations, contracts, and grant agreements, noncompliance with which could have a direct and material effect on the determination of financial statement amounts. However, providing an opinion on compliance with those provisions was not an objective of our audit, and accordingly, we do not express such an opinion. The results of our tests disclosed no instances of noncompliance or other matters that are required to be reported under *Government Auditing Standards*.

Purpose of this Report

The purpose of this report is solely to describe the scope of our testing of internal control and compliance and the results of that testing, and not to provide an opinion on the effectiveness of OCFA's internal control or on compliance. This report is an integral part of an audit performed in accordance with *Government Auditing Standards* in considering OCFA's internal control and compliance. Accordingly, this communication is not suitable for any other purpose.

Lance, Soll & Lunghard, LLP

Brea, California
September 30, 2016

LSL

CPAs AND ADVISORS

INDEPENDENT AUDITORS' REPORT ON COMPLIANCE FOR EACH MAJOR PROGRAM
ON INTERNAL CONTROL OVER COMPLIANCE; AND REPORT ON SCHEDULE OF EXPENDITURES
OF FEDERAL AWARDS REQUIRED BY THE UNIFORM GUIDANCE

To the Board of Directors
Orange County Fire Authority
Irvine, California

Report on Compliance for Each Major Federal Program

We have audited Orange County Fire Authority's (the "OCFA") compliance with the types of compliance requirements described in the *OMB Compliance Supplement* that could have a direct and material effect on each of the OCFA's major federal programs for the year ended June 30, 2016. The OCFA's major federal programs are identified in the summary of auditor's results section of the accompanying schedule of findings and questioned costs.

Management's Responsibility

Management is responsible for compliance with federal statutes, regulations, and the terms and conditions of its federal awards applicable to its federal programs.

Auditor's Responsibility

Our responsibility is to express an opinion on compliance for each of the OCFA's major federal programs based on our audit of the types of compliance requirements referred to above. We conducted our audit of compliance in accordance with auditing standards generally accepted in the United States of America; the standards applicable to financial audits contained in *Government Auditing Standards*, issued by the Comptroller General of the United States; and the audit requirements of Title 2 U.S. *Code of Federal Regulations* Part 200, *Uniform Administrative Requirements, Cost Principles, and Audit Requirements for Federal Awards* (Uniform Guidance). Those standards and the Uniform Guidance require that we plan and perform the audit to obtain reasonable assurance about whether noncompliance with the types of compliance requirements referred to above that could have a direct and material effect on a major federal program occurred. An audit includes examining, on a test basis, evidence about the OCFA's compliance with those requirements and performing such other procedures as we considered necessary in the circumstances.

We believe that our audit provides a reasonable basis for our opinion on compliance for each major federal program. However, our audit does not provide a legal determination of the OCFA's compliance.

Opinion on Each Major Federal Program

In our opinion, the Orange County Fire Authority complied, in all material respects, with the types of compliance requirements referred to above that could have a direct and material effect on each of its major federal programs for the year ended June 30, 2016.

LSL
CPAs AND ADVISORS

To the Board of Directors
Orange County Fire Authority
Irvine, California

Report on Internal Control over Compliance

Management of the OCFA is responsible for establishing and maintaining effective internal control over compliance with the types of compliance requirements referred to above. In planning and performing our audit of compliance, we considered the OCFA's internal control over compliance with the types of requirements that could have a direct and material effect on each major federal program to determine the auditing procedures that are appropriate in the circumstances for the purpose of expressing an opinion on compliance for each major federal program and to test and report on internal control over compliance in accordance with the Uniform Guidance, but not for the purpose of expressing an opinion on the effectiveness of internal control over compliance. Accordingly, we do not express an opinion on the effectiveness of the OCFA's internal control over compliance.

A *deficiency in internal control over compliance* exists when the design or operation of a control over compliance does not allow management or employees, in the normal course of performing their assigned functions, to prevent, or detect and correct, noncompliance with a type of compliance requirement of a federal program on a timely basis. A *material weakness in internal control over compliance* is a deficiency, or combination of deficiencies, in internal control over compliance, such that there is a reasonable possibility that material noncompliance with a type of compliance requirement of a federal program will not be prevented, or detected and corrected, on a timely basis. A *significant deficiency in internal control over compliance* is a deficiency, or a combination of deficiencies, in internal control over compliance with a type of compliance requirement of a federal program that is less severe than a material weakness in internal control over compliance, yet important enough to merit attention by those charged with governance.

Our consideration of internal control over compliance was for the limited purpose described in the first paragraph of this section and was not designed to identify all deficiencies in internal control over compliance that might be material weaknesses or significant deficiencies. We did not identify any deficiencies in internal control over compliance that we consider to be material weaknesses. However, material weaknesses may exist that have not been identified.

The purpose of this report on internal control over compliance is solely to describe the scope of our testing of internal control over compliance and the results of that testing based on the requirements of the Uniform Guidance. Accordingly, this report is not suitable for any other purpose.

Report on the Schedule of Expenditures of Federal Awards Required by the Uniform Guidance

We have audited the financial statements of the governmental activities, the discretely presented component unit, each major fund, and the aggregate remaining fund information of the OCFA, as of and for the year ended June 30, 2016, and the related notes to the financial statements, which collectively comprise OCFA's basic financial statements. We issued our report thereon dated September 30, 2016 which contained an unmodified opinion on those financial statements. Our audit was conducted for the purpose of forming opinions on the financial statements that collectively comprise the basic financial statements. The accompanying schedule of expenditures of federal awards is presented for the purposes of additional analysis as required by *Title 2 U.S. Code of Federal Regulations (CFR) Part 200, Uniform Administrative Requirements, Cost Principles, and Audit Requirements for Federal Awards*, and is not a required part of the basic financial statements. Such information is the responsibility of management and was derived from and relates directly to the underlying accounting and other records used to prepare the basic financial statements.

LSL
CPAs AND ADVISORS

To the Board of Directors
Orange County Fire Authority
Irvine, California

The information has been subjected to the auditing procedures applied in the audit of the financial statements and certain additional procedures, including comparing and reconciling such information directly to the underlying accounting and other records used to prepare the basic financial statements or to the basic financial statements themselves, and other additional procedures in accordance with auditing standards generally accepted in the United States of America. In our opinion, the schedule of expenditures of federal awards is fairly stated in all material respects in relation to the basic financial statements as a whole.

Lance, Soll & Lunghard, LLP

Brea, California
September 30, 2016

ORANGE COUNTY FIRE AUTHORITY

SCHEDULE OF EXPENDITURES OF FEDERAL AWARDS
FOR THE FISCAL YEAR ENDED JUNE 30, 2016

Federal Grantor / Pass-through Grantor / Program Title	Federal CFDA Number	Program / Project Identification Number	Expenditures
U.S. Department of Homeland Security:			
Direct assistance via Federal Emergency Management Agency			
National Urban Search and Rescue (US&R) Response System *			
2014 Cooperative Agreement	97.025	EMW-2014-CA-K00032	$ 507,479
2015 Cooperative Agreement	97.025	EMW-2015-CA-00014	773,945
Subtotal - CFDA 97.025			1,281,424
Assistance to Firefighters Grant *			
2014 Vehicle Extrication Gloves	97.044	EMW-2014-FO-05840	43,022
Subtotal - direct assistance			1,324,446
Passed through the City of Anaheim:			
Homeland Security Grant Program *			
2014 Urban Area Security Initiative - Regional Training	97.067	DHS 2014-SS-00093	3,528
Passed through the City of Santa Ana:			
Homeland Security Grant Program *			
2015 Urban Area Security Initiative - Regional Training	97.067	DHS 2015-SS-00078	6,027
2015 Urban Area Security Initiative - Wildland Urban Interface Pre-Fire Plans	97.067	DHS 2015-SS-00078	50,000
Passed through the Orange County Sheriff's Department:			
Homeland Security Grant Program *			
2014 Regional Training	97.067	DHS 2014-SS-00093	2,085
2014 Wildland Urban Interface Pre-Fire Plans	97.067	DHS 2014-SS-00093	99,980
2014 Orange County Intelligence Assessment Center	97.067	DHS 2014-SS-00093	100,099
2015 O-305 All Harzards Incident Management Team Class	97.067	DHS 2015-SS-00078	22,713
2015 Regional Training	97.067	DHS 2015-SS-00078	1,268
2015 Wildland Urban Interface Pre-Fire Plans	97.067	DHS 2015-SS-00078	8,600
2015 Orange County Intelligence Assessment Center	97.067	DHS 2015-SS-00078	32,198
Subtotal - CFDA 97.067			326,498
Total U.S. Department of Homeland Security			**1,650,944**
Total Federal Expenditures			**$ 1,650,944**

* Major Program

Note a: Refer to Note 1 to the Schedule of Expenditures of Federal Awards for a description of significant accounting policies used in preparing this schedule.

Note b: There were no federal awards expended in the form of noncash assistance and insurance in effect during the year.

Note c: Total amount provided to subrecipients during the year was $0.

Note 1: Summary of Significant Accounting Policies Applicable to the Schedule of Expenditures of Federal Awards

a. Scope of Presentation

The accompanying schedule presents only the expenditures incurred by the Orange County Fire Authority (the Authority), that are reimbursable under federal programs of federal financial assistance. For the purposes of this schedule, federal awards include both federal financial assistance received directly from a federal agency, as well as federal funds received indirectly by the Authority from a non-federal agency or other organization. Only the portion of program expenditures reimbursable with such federal funds is reported in the accompanying schedule. Program expenditures in excess of the maximum federal reimbursement authorized or the portion of the program expenditures that were funded with state, local or other non-federal funds are excluded from the accompanying schedule.

b. Basis of Accounting

The expenditures included in the accompanying schedule were reported on the modified accrual basis of accounting. Under the modified accrual basis of accounting, expenditures are incurred when the Authority becomes obligated for payment as a result of the receipt of the related goods and services. Expenditures reported included any property or equipment acquisitions incurred under the federal program. The Authority has elected not to use the 10-percent de minimis indirect cost rate allowed under the Uniform Guidance.

ORANGE COUNTY FIRE AUTHORITY

SCHEDULE OF FINDINGS AND QUESTIONED COSTS
FOR THE FISCAL YEAR ENDED JUNE 30, 2016

SECTION I - SUMMARY OF AUDITORS' RESULTS

Financial Statements

Type of auditors' report issued: Unmodified Opinion

Internal control over financial reporting:

- Significant deficiencies identified? ____yes __X__no
- Material weaknesses identified? ____yes __X__none reported

Noncompliance material to financial statements noted? ____yes __X__no

Federal Awards

Internal control over major programs:

- Significant deficiencies identified? ____yes __X__no
- Material weaknesses identified? ____yes __X__none reported

Type of auditors' report issued on compliance for major programs: Unmodified Opinion

Any audit findings disclosed that are required to be reported in accordance with the Uniform Guidance? ____yes __X__no

Identification of major programs:

CFDA Number(s)	Name of Federal Program or Cluster
97.025	National Urban Search and Rescue Response System
97.044	Assistance to Firefighters Grant
97.067	Homeland Security Grant Program

Dollar threshold used to distinguish between type A and type B program $750,000

Auditee qualified as low-risk auditee? ____yes __X__no

SECTION II - FINANCIAL STATEMENT FINDINGS

No matters were reported.

SECTION III - FEDERAL AWARD FINDINGS AND QUESTIONED COSTS

No matters were reported.

SECTION IV - FINANCIAL STATEMENT FINDINGS

No matters were reported.

SECTION V - FEDERAL AWARD FINDINGS AND QUESTIONED COSTS

No matters were reported.

LSL

CPAs AND ADVISORS

September 30, 2016

To the Board of Directors
Orange County Fire Authority
Irvine, California

We have audited the financial statements of the governmental activities, the discretely presented component unit, each major fund, and the aggregate remaining fund information of the Orange County Fire Authority (the Authority) for the year ended June 30, 2016. Professional standards require that we provide you with information about our responsibilities under generally accepted auditing standards, *Government Auditing Standards* and the Uniform Guidance, as well as certain information related to the planned scope and timing of our audit. We have communicated such information in our letter to you dated May 10, 2016. Professional standards also require that we communicate to you the following information related to our audit.

Significant Audit Findings

Qualitative Aspects of Accounting Practices

Management is responsible for the selection and use of appropriate accounting policies. The significant accounting policies used by the Authority are described in the notes to the financial statements. No new accounting policies were adopted and the application of existing policies was not changed during fiscal year 2015-2016.

We noted no transactions entered into by the Authority during the year for which there is a lack of authoritative guidance or consensus. All significant transactions have been recognized in the financial statements in the proper period.

Accounting estimates are an integral part of the financial statements prepared by management and are based on management's knowledge and experience about past and current events and assumptions about future events. Certain accounting estimates are particularly sensitive because of their significance to the financial statements and because of the possibility that future events affecting them may differ significantly from those expected.

Certain financial statement disclosures are particularly sensitive because of their significance to financial statement users. The most sensitive disclosure affecting the financial statements was:

> The disclosure of Net Pension Liability in Note 21 to the financial statements identifies the unfunded liability and related deferred outflows and inflows related to the Authority's proportionate share of the Orange County Employees Retirement System (OCERS). In addition, it identifies the sensitivity of the Net Pension Liability to changes in assumptions; more specifically the assumed discount rate of 7.25%. If the discount rate decreases 1%, the Authority's Net Pension Liability would increase by approximately $230,000,000. Conversely, if the discount rate increases by 1%, it would decrease the Net Pension Liability by approximately $190,000,000.

The financial statement disclosures are neutral, consistent, and clear.

LSL

CPAs AND ADVISORS

To the Board of Directors
Orange County Fire Authority
Irvine, California

Difficulties Encountered in Performing the Audit

We encountered no significant difficulties in dealing with management in performing and completing our audit.

Corrected and Uncorrected Misstatements

Professional standards require us to accumulate all known and likely misstatements identified during the audit, other than those that are trivial, and communicate them to the appropriate level of management. No misstatements were found.

Disagreements with Management

For purposes of this letter, a disagreement with management is a financial accounting, reporting, or auditing matter, whether or not resolved to our satisfaction, that could be significant to the financial statements or the auditor's report. We are pleased to report that no such disagreements arose during the course of our audit.

Management Representations

We have requested certain representations from management that are included in the management representation letter dated September 30, 2016.

Management Consultations with Other Independent Accountants

In some cases, management may decide to consult with other accountants about auditing and accounting matters, similar to obtaining a "second opinion" on certain situations. If a consultation involves application of an accounting principle to the Authority's financial statements or a determination of the type of auditors' opinion that may be expressed on those statements, our professional standards require the consulting accountant to check with us to determine that the consultant has all the relevant facts. To our knowledge, there were no such consultations with other accountants.

Other Audit Findings or Issues

We generally discuss a variety of matters, including the application of accounting principles and auditing standards, with management each year prior to retention as the Authority's auditors. However, these discussions occurred in the normal course of our professional relationship and our responses were not a condition to our retention.

We discussed the Authority's information technology and general computer controls with management, and made a suggestion to strengthen controls over IT by reevaluating the current policy over password controls and implementing changes that would require passwords to be changed more frequently and to have a minimum set of characters, as deemed appropriate by the IT Department.

LSL

CPAs AND ADVISORS

To the Board of Directors
Orange County Fire Authority
Irvine, California

Other Matters

We applied certain limited procedures to the management's discussion and analysis, the schedule of proportionate share of the net pension liability, the schedules of contributions, the schedule of changes in the net pension liability and related ratios, the schedules of funding progress, and the schedule of investment returns, which are required supplementary information (RSI) that supplements the basic financial statements. Our procedures consisted of inquiries of management regarding the methods of preparing the information and comparing the information for consistency with management's responses to our inquiries, the basic financial statements, and other knowledge we obtained during our audit of the basic financial statements. We did not audit the RSI and do not express an opinion or provide any assurance on the RSI.

We were engaged to report on the combining individual schedules and statements, which accompany the financial statements but are not RSI. With respect to this supplementary information, we made certain inquiries of management and evaluated the form, content, and methods of preparing the information to determine that the information complies with accounting principles generally accepted in the United States of America, the method of preparing it has not changed from the prior period, and the information is appropriate and complete in relation to our audit of the financial statements. We compared and reconciled the supplementary information to the underlying accounting records used to prepare the financial statements or to the financial statements themselves.

We were not engaged to report on the introductory and statistical sections, which accompany the financial statements but are not considered RSI or supplementary information. We did not audit or perform other procedures on this other information and we do not express an opinion or provide any assurance on it.

The following new Governmental Accounting Standards Board (GASB) pronouncements were effective for fiscal year 2015-2016 audit:

GASB Statement No. 72, *Fair Value Measurement and Application.*

GASB Statement No. 76, *The Hierarchy of Generally accepted Accounting Principles for State and Local Governments.*

GASB Statement No. 79, *Certain External Investment Pools and Pool Participants.*

The following Governmental Accounting Standards Board (GASB) pronouncements are effective in the following fiscal year audit and should be reviewed for proper implementation by management:

Fiscal year 2016-2017

GASB Statement No. 73, *Accounting and Financial Reporting for Pensions and Related Assets That Are Not within the Scope of GASB Statement No. 68, and Amendments to Certain Provisions of GASB Statement Nos. 67 and 68.*

GASB Statement No. 74, *Financial Reporting for Postemployment Benefit Plans Other Than Pension Plans.*

GASB Statement No. 77, *Tax Abatement Disclosures.*

GASB Statement No. 78, *Pensions Provided through Certain Multiple-Employer Defined Benefit Pension Plans.*

LSL

CPAs AND ADVISORS

To the Board of Directors
Orange County Fire Authority
Irvine, California

GASB Statement No. 80, *Blending Requirements for Certain Component Units-an Amendment of GASB Statement No. 14.*

GASB Statement No. 82, *Pension Issues an Amendment of GASB Statement Nos. 67, 68, and 73.*

Fiscal year 2017-2018

GASB Statement No. 75, *Accounting and Financial Reporting for Postemployment Benefits Other Than Pensions.*

GASB Statement No. 81, *Irrevocable Split Interest Agreements.*

Restriction on Use

This information is intended solely for the use of the Board of Directors and management of the Orange County Fire Authority and is not intended to be, and should not be, used by anyone other than these specified parties.

Very truly yours,

Lance, Soll & Lunghard, LLP

Brea, California

ASSIGNED FUND BALANCE POLICY

1. PURPOSE

The purpose of the Assigned Fund Balance Policy is to establish the authority by which OCFA may set aside cumulative resources in fund balance for an intended future use.

2. ADOPTION AND REVIEW

2.1. This policy shall be reviewed periodically for recommended revisions in order to maintain the policy in a manner that reflects the ongoing financial goals of the OCFA. Staff shall revise the policy upon approval by the Board of Directors.

2.2. Each year at the time the audited financial statements are approved, the Budget and Finance Committee shall review the calculations used to determine the amounts assigned to workers' compensation and the capital improvement program, and shall confirm the calculations' consistency with the Assigned Fund Balance Policy.

3. POLICY

3.1. In accordance with Governmental Accounting Standard Board (GASB) Statement No. 54, *Fund Balance Reporting and Governmental Fund Type Definitions*, fund balance amounts intended to be used by a government for a specific purpose should be presented in the financial statements as "assigned" fund balance. Assigned balance includes resources that are set aside for an intended use and represents current intentions (subject to change) as to how the resources will be expended.

3.2. The Board of Directors has the authority to assign fund balance. The Board of Directors shall delegate its authority to assign amounts for *workers' compensation* and the *capital improvement program* to the Assistant Chief of Business Services, or her designee.

3.3. The Assistant Chief of Business Services, or her designee, shall assign and un-assign fund balance for the specific purposes of *workers' compensation* and the *capital improvement program*, in accordance with the guidelines described in this policy. The authority to assign and un-assign fund balance for any other specific purposes shall be retained by the Board of Directors.

3.4. The assignment for *workers' compensation* will reflect the cumulative difference between actual workers' compensation expenditures incurred (cash-flow basis) and budgeted costs, which are based on an annual actuarial valuation prepared by an external actuary and a confidence level set by the Board of Directors.

3.4.1 The amount of the assignment will be calculated annually in conjunction with the fiscal year-end closing process.

3.5. The assignment for the *capital improvement program* will reflect cumulative amounts transferred from the General Fund to the OCFA's capital projects funds in accordance with the *Financial Stability Budget Policy*, net of actual cumulative project expenditures and other revenue sources accounted for in those funds. The assignment for the *capital improvement program* may also include net resources accumulated within the General Fund itself in order to fund purchases and projects that are capital in nature but do not necessarily meet the criteria to be reported in one of OCFA's three capital projects funds.

3.5.1 The amount of the assignment will be calculated annually in conjunction with the fiscal year-end closing process.

3.5.2 The amount of the assignment will not exceed projects currently identified in the OCFA's five-year capital improvement program, including projects that have been identified as deferred pending improved financial conditions.

3.6. Assigned funds must be expended in conjunction with the spending authority provided by the annual budget and any subsequent amendments.

ORANGE COUNTY FIRE AUTHORITY **Attachment 7A**

Fund Balance Assigned for Capital Improvement Program

Final Calculation

As of June 30, 2016

	Source	General Fund CIP Fund 12110	Communications and Information Systems Fund 124	Fire Apparatus Fund 133	Fire Stations and Facilities Fund 123	Total
Actual Fund Balance Available for CIP Assignment						
Total actual fund balance @ 6/30/2016	FYE 6/30/2016 CAFR, pages 34-35, 108-109	4,761,135	19,002,272	21,452,261	15,858,647	61,074,315
Less nonspendable fund balance - prepaid items	FYE 6/30/2016 CAFR, pages 34-35, 108-109	(35,912)	-	-	-	(35,912)
Less restricted fund balance - CALFIRE station(s)	FYE 6/30/2016 CAFR, pages 34-35, 108-109	-	-	-	(533,232)	(533,232)
Less outstanding encumbrances:						
Pertaining to assigned resources	FYE 6/30/2016 CAFR, pages 34-35, 108-109	(56,909)	(24,715)	(6,663,607)	(13,135)	(6,758,366)
Actual fund balance available for CIP assignment @ 6/30/2016 (A)		**4,668,314**	**18,977,557**	**14,788,654**	**15,312,280**	**53,746,805**
Possible CIP Expenditures, Net of Offsetting Revenues and Funding Sources						
Possible CIP Expenditures						
Re-budgeted appropriations	Board of Directors approval 9/22/2016, Item #3A	4,168,410	1,609,482	7,175,845	738,686	13,692,423
Subtotal		4,168,410	1,609,482	7,175,845	738,686	13,692,423
Planned project expenditures:						
Projects in five-year CIP plan	FY 2015/16 Draft/Adopted Budget, page 31	7,510,500	19,945,995	36,451,256	15,460,000	79,367,751
Projects beyond five-year plan - helicopter lease debt service	FYE 6/30/2016 CAFR, page 69	-	-	-	-	-
Subtotal		7,510,500	19,945,995	36,451,256	15,460,000	79,367,751
Deferred project expenditures:						
Deferred five-year CIP plan	FY 2015/16 Draft/Adopted Budget, page 70	-	-	2,949,862	-	2,949,862
Subtotal		-	-	2,949,862	-	2,949,862
Possible CIP expenditures		**11,678,910**	**21,555,477**	**46,576,963**	**16,198,686**	**96,010,036**
Offsetting Revenues and Funding Sources						
Re-budgeted revenues	Board of Directors approval 9/22/2016, Item #3A	-	-	-	-	-
Subtotal		-	-	-	-	-
Restricted fund balance for projects in 5-year CIP and deferred plans:						
CALFIRE station(s)	N/A	-	-	-	-	-
Subtotal		-	-	-	-	-
Cash Contract City revenues:						
Vehicle replacement charges (5 years)	Cash Contract City annual vehicle charge, as prepared by GA Unit	-	-	(6,934,044)	-	(6,934,044)
Subtotal		-	-	(6,934,044)	-	(6,934,044)
Other budgeted developer/grant/CALFIRE funding:						
Station 67 - developer funded vehicles	Cost-reimbursable budgeted costs	-	-	(2,791,260)	-	(2,791,260)
Subtotal		-	-	(2,791,260)	-	(2,791,260)
Possible offsetting revenues		**-**	**-**	**(9,725,304)**	**-**	**(9,725,304)**
Possible CIP expenditures, net of offsetting revenues (B)		**11,678,910**	**21,555,477**	**36,851,659**	**16,198,686**	**86,284,732**
Over (under) funded as of 6/30/2016 (A-B)		**(7,010,596)**	**(2,577,920)**	**(22,063,005)**	**(886,406)**	**(32,537,927)**
Final Fund Balance Assignment						
Actual fund balance available for CIP assignment @ 6/30/2016		4,668,314	18,977,557	14,788,654	15,312,280	53,746,805
Less: Over funded amount to be transferred back to the General Fund		-	-	-	-	-
Final fund balance assignment @ 6/30/2016		**4,668,314**	**18,977,557**	**14,788,654**	**15,312,280**	**53,746,805**

ORANGE COUNTY FIRE AUTHORITY **Attachment 7B**

Fund Balance Assigned for Workers Compensation

Final Calculation

As of June 30, 2016

		Self Insurance Fund		
Description	Source	Final Budget	Positive (Negative) Variance	Actual
Revenues:				
Interest	FYE 6/30/2016 CAFR, pages 111,115	$ 315,984	71,793	$ 387,777
Workers' compensation charges	FYE 6/30/2016 CAFR, pages 111,115	12,729,592	-	12,729,592
Subtotal - revenues		13,045,576	71,793	13,117,369
Expenditures:				
Workers' compensation claims paid	FYE 6/30/2016 CAFR, pages 111,115	(7,702,911)	(189,200)	(7,892,111)
Subtotal - expenditures		(7,702,911)	(189,200)	(7,892,111)
Total change in fund balance		**$ 5,342,665**	**$ (117,407)**	**$ 5,225,258**
		(A)	(B)	
Assignment for Workers' Compensation:				
Actual assignment @ 6/30/2015	FYE 6/30/2015 CAFR, page 35		$ 68,494,796	
Budgeted change in fund balance	(A)		5,342,665	
Budgeted assignment @ 6/30/2016			73,837,461	
Variance between final budget and actual amounts	(B)		(117,407)	
Actual assignment @ 6/30/2016	FYE 6/30/2016 CAFR, page 35		**$ 73,720,054**	

Attachment 8

Orange County Fire Authority
Calculation of Unencumbered Fund Balance
General Operating Fund*
Fiscal Year 2015/16

		Final Budget	Actual	Difference
Property tax revenue (Structural Fire Fund - SFF)		$ 218,156,295	$ 219,840,417	$ 1,684,122
Other revenues		128,123,207	131,591,101	3,467,894
Transfers in		-	-	-
Subtotal revenues and transfers in	(A)	346,279,502	351,431,518	5,152,016
Expenditures		341,456,380	335,593,636	5,862,744
Transfers out		5,516,980	5,516,980	-
Subtotal expenditures and transfers out		346,973,360	341,110,616	5,862,744
Less: Prior year encumbrances		(557,293)	(547,371)	(9,922)
Subtotal		346,416,067	340,563,245	5,852,822
Plus: Current year encumbrances		-	488,736	(488,736)
Subtotal budgetary expenditures	(B)	346,416,067	341,051,981	5,364,086
Total unencumbered fund balance before adjustments	(A+B)			10,516,102
Reconciling items:				
Rebudget of FY 2015/16 uncompleted projects:				
Increase budgeted FY 2016/17 revenues				686,889
Increase budgeted FY 2016/17 appropriations				(1,356,822)
Subtotal				(669,933)
GASB 31 interest adjustment				(31,692)
Total reconciling items	(C)			(701,625)
Total unencumbered fund balance with adjustments	**(A+B+C)**			**$ 9,814,477**

FY 2016/17 General Operating Fund budget (expenditures, other uses, and transfers out)	$ 347,594,201
Unencumbered fund balance as a percentage of next year's General Operating Fund budget	2.82%

*** In the 2015/16 Financial Statements, the Combined General Fund includes the General Fund CIP Fund (12110), Structural Fire Entitlement Fund (171), and the Workers' Compensation Fund (190), which should not be included in the calculations of unencumbered fund balance. Therefore, activities in these three funds have been eliminated from this calculation. The General Operating Fund includes only the General Fund (121) and the Property Management Sub-Fund (12150).**

Orange County Fire Authority

AGENDA STAFF REPORT

Board of Directors Meeting
November 17, 2016

Agenda Item No. 5D
Discussion Calendar

Approve Contingency Budget for Audio Video Systems Upgrade Project

Contact(s) for Further Information

Mike Schroeder, Assistant Chief (Presenter) michaelschroeder@ocfa.org 714.573.6008
Support Services Department

Joel Brodowski, IT Manager joelbrodowski@ocfa.org 714.573.6421

Summary

This agenda item seeks approval to establish a contingency budget for a public works contract with Western Audio Visual to upgrade the Audio Video (AV) equipment, systems, and wiring used in the Board Room, Classrooms, and Training rooms at the Regional Fire Operations and Training Center (RFOTC).

Prior Board/Committee Action

On October 27, 2016, the Board of Directors accepted the bid from Western Audio Visual for the AV upgrade project contingent upon staff correcting the construction contract, providing the contract documents including the bid submittal, and the proposed project timeline. The Board directed staff to return with evidence indicating that those conditions were met prior to approving the additionally requested 10% contingency.

RECOMMENDED ACTION(S)

Approve and authorize the Purchasing Manager to add a 10% contingency to the Western Audio Visual Purchase Order in the amount of $51,229 under the condition that these additional funds may only be utilized in the event of an emergent situation that must be addressed immediately and cannot wait for approval by the Board of Directors.

Impact to Cities/County

Not Applicable.

Fiscal Impact

Funding is included in the FY 2016/17 Fund 124 CIP budget.

Background

The OCFA utilizes AV equipment and systems in the boardroom, board breakout room, two additional classrooms, and two training rooms at the RFOTC. The equipment was installed during the construction of the RFOTC and is obsolete and failing. Replacing the old AV equipment, wiring, and other systems will require construction workers to open sections of the floors, walls, and ceilings in the rooms specified. The contingency funds are to be used only to remedy emergent conditions that require immediate action. Any changes including use of the contingency for conditions that were not discoverable until after the construction phase began or owner directed changes will be brought to the Board Chair before proceeding and reported back to the Executive

Committee at the next available meeting in an effort to keep the Board apprised of project status. Completing this project in a timely manner is critical due to the use of the board room and additional classrooms for regular meetings and training. As such, staff recommends approval and authorization for the Purchasing Manager to add an additional $51,229 or 10% contingency to the Western Audio Visual Purchase Order to be used only in the case of an emergent and unforeseen situation.

Attachment(s)

1. Revised Construction Contract
2. Contract Documents (Proposal and Plans/Specs: due to their large size, these documents are on file in the Clerk's office and posted on OCFA's website at http://www.ocfa.org/AboutUs/BoardMeetings.aspx#agenda_minutes)
3. Revised Time Schedule
4. Detailed Labor and Fee Breakdown

ORANGE COUNTY FIRE AUTHORITY
CONSTRUCTION CONTRACT

Per Bid R02155

THIS CONTRACT is made and entered into, to be effective, this 27th day of October 2016, by and between Western Audio Visual., hereinafter referred to as "Contractor," and the Orange County Fire Authority, hereinafter referred to as "Authority."

SECTION 1 - GENERAL CONDITIONS

Contractor certifies and agrees that all the terms, conditions, and obligations of the Contract Documents as defined therein, the location of the project site, and the conditions under which the work is to be performed, have been thoroughly reviewed and enters into this Contract based upon Contractor's investigation of all such matters and is in no way relying upon any opinions or representations of Authority. It is agreed that this Contract and the attached exhibits (collectively "Contract Documents") represent the entire agreement. It is further agreed that the Contract Documents including the General Conditions, Scope of Work, Notice Inviting Bids, Special Instructions to Bidders, if any, and Contractor's Bid, and any revision, amendment, or addenda thereto, shall be deemed a part of such Contract Documents, and the Contractor and its subcontractors, if any, will be and are bound by any and all of the Contract Documents insofar as they relate in any part or in any way, directly or indirectly, to the work covered by this Contract. Contractor further certifies and agrees that the work described in the Contract Documents will be performed, installed, constructed, and completed in a professional and expert manner and that all such work will be completed on time and within budget.

SECTION 2 - MATERIALS AND LABOR

Contractor shall furnish, under the conditions expressed in the Contract Documents, at Contractor's own expense, all labor and materials necessary, except such as are mentioned in the Specifications to be furnished by the Authority, to construct and complete the Project, in good workmanlike and substantial order. If Contractor fails to pay for labor or materials when due, Authority may settle such claims by making demand upon the surety to this Agreement. In the event of the failure or refusal of the surety to satisfy said claims, Authority may settle them directly and deduct the amount of payments from the Contract price and any amounts due to Contractor. In the event Authority receives a stop notice from any laborer or material supplier alleging nonpayment by Contractor, Authority shall be entitled to deduct all of its costs and expenses incurred relating thereto, including but not limited to administrative and legal fees.

Final Payment shall not become due until Contractor submits to Authority's Project Manager: (1) an Unconditional and Final Release of Liens containing an affidavit that all payrolls, bills for materials and equipment, and other indebtedness connected with the work and materials for which Authority or Authority's property might in any way be responsible, have been paid or otherwise satisfied, and signed by all subcontractors and suppliers; (2) the consent of the surety to Final Payment; and (3) if reasonably required by the Authority's Project Manager, other data establishing payment or satisfaction of all such obligations, such as receipts, releases and waivers of liens arising out of the Contract, to the extent and in such form as may be designated by the Authority's Project Manager. Authority's Project Manager may require affidavits or certificates of payment and/or releases from any Subcontractor, laborer, or material supplier.

If any Subcontractor or material supplier refuses to sign the Final Release of Liens or to furnish a release or waiver required by Authority's Project Manager, Contractor may satisfy its obligation with respect to such Subcontractor or material supplier by furnishing a cash bond, assignment of a certificate of deposit, or other liquid security satisfactory to Authority's Project Manager to indemnify Authority against any lien and against the costs and reasonable attorney fees in discharging such lien. If any lien remains unsatisfied after all payments are made, Contractor shall refund to Authority all monies that the Authority pays in discharging such lien, including all costs and reasonable attorneys' fees, or Authority in its sole discretion may proceed to make a demand against the surety for all such costs and attorney fees. In the event

Authority makes demand for payment against the surety, Contractor shall be responsible to reimburse Authority upon demand for any costs and reasonable attorney fees not paid by the surety.

SECTION 3 - CONTRACT PRICE AND METHOD OF PAYMENT

Authority agrees to pay and the Contractor agrees to accept as full consideration for the faithful performance of this Contract, subject to any subsequent additions or deductions as provided in approved change orders, the sum of five hundred twelve thousand, two hundred ninety-six dollars and fifty-two cents ($512,296.52) as shown on Exhibit A.

Within thirty (30) days from the commencement of work, there shall be paid to the Contractor a sum equal to ninety-five percent (95%) of the value of the actual work completed plus a like percentage of the value of material suitably stored at the worksite or approved storage yards subject to or under the control of the Authority, since the commencement of the work as determined by the Authority. Thereafter, on a schedule issued by the Authority at the commencement of the job which shows a minimum of one payment made to the Contractor per month for each successive month as the work progresses and the request for payment due dates from the Contractor to meet the payment schedule, the Contractor shall be paid such sum as will bring the total payments received since the commencement of the work up to ninety-five percent (95%) of the value of the work completed since the commencement of work as determined by the Authority, less all previous payments, provided that the Contractor submits the request for payment prior to the end of the day required to meet the payment schedule. The Authority will retain five percent (5%) of the amount of each such progress estimate and material cost until the Final Payment.

Payments shall be made on demands drawn in the manner required by law, accompanied by a certificate signed by the Authority's Project Manager, stating that the work for which payment is demanded has been performed in accordance with the terms of the Contract, and that the amount stated in the certificate is due under the terms of the Contract. Partial payments on the Contract price shall not be considered as an acceptance of any part of the work.

SECTION 4 – TIME OF COMMENCEMENT AND COMPLETION

Contractor agrees to commence the Project within 15 calendar days from the date of execution of this Agreement and shall diligently prosecute the work to completion as provided for in the Contract Documents, excluding delays caused or authorized by the Authority as set forth in Contract Documents.

Time is of the essence of this Contract. As required by the Contract Documents, Contractor shall prepare and obtain approval of all shop drawings, details, and samples, and do all other things necessary and incidental to the prosecution of Contractor's work in conformance with an approved construction schedule. Contractor shall coordinate the work covered by this Contract with that of all other Contractors, subcontractors and of the Authority, if any, in a manner that will facilitate the efficient completion of the entire work in accordance with the Contract Documents. Authority shall have the right to assert complete control of the premises on which the work is to be performed and shall have the right to decide the time or order in which the various portions of the work shall be installed or the priority of the work of other subcontractors, and, in general, all matters representing the timely and orderly conduct of the work of Contractor on the premises.

SECTION 5 – LIQUIDATED DAMAGES FOR DELAY

The parties agree that if the total work called for under this Contract, in all parts and requirements, is not completed within the time specified in Section 4 plus any allowance made for delays or extensions authorized under the Contract Documents, the Authority will sustain damage which would be extremely difficult and impracticable to ascertain. The parties therefore agree that Contractor will pay to Authority the sum of One Thousand Dollars ($1,000.00) per day, as liquidated damages, and not as a penalty, for each and every calendar day during which completion of the Project is so delayed. Contractor agrees to pay such liquidated damages and further agrees that Authority may offset the amount of liquidated damages from any monies due or that may become due Contractor under this Contract.

SECTION 6 – COMPLETION

Within 10 days after the contract completion date of the Project, Contractor shall file with the Project Manager its affidavit stating that all workers and persons employed, all firms supplying materials, and all subcontractors upon the Project have been paid in full, and that there are no claims outstanding against the Project for either labor or material, except those certain items, if any, to be set forth in an affidavit covering disputed claims, or items in connection with Stop Notices which have been filed under the provisions of the statutes of the State of California. The Project Manager may require affidavits or certificates of payment and/or releases from any subcontractor, laborer or material supplier.

Upon receipt of Contractor's affidavit, the Project Manager shall prepare appropriate documentation setting forth the particular details of the completed project, including but not limited to, description and amount of all change orders, the final amounts of the contract, as amended, the time and dates of the total agreement and the identification of any unresolved claims or disputes. If necessary, Project Manager shall submit the project and the agreements to the Board of Directors for acceptance of the job as complete.

SECTION 7 – SURETY BONDS

General Requirements

To the extent required under Civil Code section 9550, the Contractor shall furnish, prior to the signing the Agreement, and maintain thereafter, a payment bond in the amount of 100 percent of the contract price including all applicable sales taxes. The bond shall be first approved by the office of the Counsel of the Authority. Such bonds shall be in substantially the form provided in the Contract Documents and issued by a surety authorized by the State Insurance Commissioner to do business in California, and have and maintain, throughout the life of the project, at least an A- policyholder's rating, or better, and a financial rating of Class VII, or better, in accordance with the most current A.M. Best's Rating Guide.

Unacceptable Surety

If any surety upon any bond furnished in connection with the Contract Documents becomes unacceptable to the Authority, or if any such surety fails to furnish reports as to its financial condition from time to time as requested by the Project Manager, the Contractor shall promptly furnish such additional security as may be required by the Project Manager or the Board of Directors from time to time to protect the interests of the Authority and of persons supplying labor materials in the prosecution of the work contemplated by this Contract.

SECTION 8 – INSURANCE

Contractor is also aware of the provisions of Section 3700 of the Labor Code which requires every employer to be insured against liability for workers' compensation. Contractor and all subcontractors shall carry workers' compensation insurance for the protection of its employees during the progress of the work. The insurer shall waive its rights of subrogation against Authority, its officers, agents, and employees and shall issue an endorsement certificate to the policy evidencing same.

Contractor shall at all times carry, on all operations hereunder, bodily injury, including death and property damage liability insurance, including automotive operations, bodily injury and property damage coverage; and builders' all risk insurance. All insurance coverage shall be in amounts specified by Authority in the Insurance Requirements and shall be evidenced by the issuance of a certificate in a form prescribed by the Authority and shall be underwritten by insurance companies satisfactory to Authority for all operations, subcontract work, contractual obligations, product or completed operations, all owned vehicles and non-owned vehicles. Said insurance coverage obtained by the Contractor, excepting workers' compensation coverage, shall name the Authority, its Directors, Officers, Agents, Employees, Project Manager, and Consultants for this Contract, and all public agencies from whom permits will be obtained and their Directors, Officers, Agents, and Employees, as determined by the Authority, as additional insured on said policies.

Before Contractor performs any work at, or prepares or delivers materials to, the site of construction, Contractor shall furnish certificates of insurance evidencing the foregoing insurance coverage and such

certificates shall provide the name and policy number of each carrier and policy and that the insurance is in force and will not be canceled without thirty (30) days written notice to Authority.

Contractor shall maintain all of the foregoing insurance coverage in force until the work under this Contract is fully completed and accepted by Authority. The requirement for carrying the foregoing insurance shall not derogate from the provisions for indemnification of Authority by Contractor under this Contract. Notwithstanding nor diminishing the obligations of Contractor with respect to the foregoing, Contractor shall subscribe for and maintain in full force and effect during the life of this Contract, the following insurance in amounts not less than the amounts specified and issued by a company admitted in California and having an A.M. Best's Guide Rating of "A-" Class VII or better: However, Authority will accept State Compensation Insurance Fund, for the required policy of Worker's Compensation subject to Authority's option to require a change in insurer in the event the State Fund financial rating is decreased below "B".

Workers' Compensation	Minimum of $1,000,000 - In Accordance with the Workers' Compensation Act of the State of California.
Public Liability, in the form of either Comprehensive General Liability or Commercial General Liability written on a per-occurrence basis	$1,000,000 Combined Single Limit, per occurrence for bodily injury, death, and property damage; **OR** $ 500,000 per occurrence, with $1,000,000 aggregate for bodily injury, death, and property damage; **OR** $1,000,000 aggregate, separate for this project for bodily injury, death and property damage.
Automobile Liability, including non-owned and hired vehicles	$1,000,000 combined single limit per occurrence.

Authority or its representatives shall at all times have the right to inspect and receive the original or a certified copy of all said policies of insurance, including certificates. Contractor shall pay the premiums on the insurance hereinabove required.

Contractor shall either: (1) include all subcontractors engaged in any work relating to this Contract as additional named insureds under the Contractor's insurance policies, or (2) Contractor shall be responsible for causing its subcontractors to procure, maintain and submit evidence to Authority of insurance of the same types, in the same amounts, and in compliance with the terms of the insurance requirements set forth in this section, including submittal of all required endorsements. All insurance policies provided by Contractor's subcontractors performing any work related to this Contract shall be endorsed to name the Authority, its officials, officers, employees, agents and volunteers, as additional insureds. Contractor shall not allow any subcontractor to commence work any relating to this Contract unless and until it has provided evidence satisfactory to Authority that the subcontractor has secured all insurance required under this section. Payment under this Contract for services performed by subcontractors may be withheld by Authority until evidence satisfactory to Authority is provided that the subcontractor has secured all the required insurance is provided to Authority.

SECTION 9 – RISK AND INDEMNIFICATION

All work covered by this Contract done at the site of construction or in preparing or delivering materials to the site shall be at the risk of Contractor alone. Contractor agrees to save, indemnify and keep Authority, its Directors, Officers, Agents, Employees, Project Manager, and Consultants for this contract, and all public agencies from whom permits will be obtained and their Directors, Officers, Agents and Employees

harmless against any and all liability, claims, judgments, costs and demands, including demands arising from injuries or death of persons (Contractor's employees included) and damage to property, arising directly or indirectly out of the obligations herein undertaken or out of the operations conducted by Contractor, save and except claims or litigation arising through the sole negligence or sole willful misconduct of Authority, and will make good to and reimburse Authority for any expenditures, including reasonable attorneys' fees Authority may incur by reason of such matters, and if requested by Authority, will defend any such suits at the sole cost and expense of Contractor.

In the event Contractor or its insurer refuses or fails to provide a legal defense to Authority after receiving written notice of the legal action and a tender and demand for defense, Authority shall have the right to select counsel of its own choice to represent all the interests of the Authority. Contractor agrees that the amount of legal costs and expenses, including attorneys' fees, may be withheld by Authority from any contract amounts due and owing to Contractor until such time as a final determination is made as to the responsibility for payment of said fees and costs.

SECTION 11 – CONTRACT DOCUMENTS

For the purposes of this Agreement the "Contract Documents are the items listed below. The Contract Documents are hereby incorporated into this Agreement and made a part thereof by this reference.

1) OCFA Invitation for Bid RO2155
2) Orange County Fire Authority General Conditions
3) Drawings and Specifications for Audio/Visual Systems Upgrade at RFOTC (Produced by TK1SC Inc. and approved by OCFA)
4) Contractor Bid responding to RO2155 of September 14, 2016
5) Contractor Bid Bond dated September 13, 2016
6) Contractor Performance Bond
7) Contractor Labor and Materials Payment Bond
8) Designation of Subcontractors
9) Non-Collusion Affidavit
10) Site Visit Certification September 13, 2016
11) Contractor Certification of Worker's Compensation
12) Contractor Certification of Non-Discrimination by Contractors
13) Contractor Debarment and Suspension Certification
14) Designator of Sureties
15) Prevailing Wage Certification
16) Addenda to RO2155, Numbers 1 and 2
17) Supplemental Agreements amending or extending the Work contemplated and which may be required to complete the Work in a substantial and acceptable manner

SECTION 12 – MISCELLANEOUS PROVISIONS

Compliance with Labor Code and Public Contract Code. Authority is subject to the provisions of law relating to prevailing wages, labor law generally, and public contracts in the State of California. It is agreed that all provisions of law applicable to public contracts are a part of this contract to the same extent as though set forth herein, and will be complied with by the Contractor.

No contractor or subcontractor may be listed on a proposal for a public works unless registered with the Department of Industrial Relations pursuant to Labor Code section 1725.5 [with limited exceptions from this requirement for bid purposes only under Labor Code section 1771.1(a)].

No contractor or subcontractor may be awarded or perform a contract for public work on a public works project unless registered with the Department of Industrial Relations pursuant to Labor Code section 1725.5.

This project is subject to compliance monitoring and enforcement by the Department of Industrial Relations. Contractor shall not pay less than the prevailing wage. It shall be the responsibility of the Contractor to obtain the prevailing wage rates from the Director of Industrial Relations directly.

Independent Contractor. Neither Authority nor any of its employees shall have any control over the manner, mode or means by which Contractor, its agents or employees, perform the services required herein, except as otherwise set forth herein. Contractor shall perform all services required herein as an independent contractor of Authority and shall remain at all times as to Authority a wholly independent contractor with only such obligations as are consistent with that role. Contractor shall not at any time or in any manner represent that it or any of its agents or employees are agents or employees of Authority.

Assignment. Contractor shall neither delegate its duties or obligations, nor assign its rights with respect to this Contract, either in whole or in part. Any such attempted delegation and/or assignment shall be void and deemed void at such occurrence, if it were to occur.

Computation of Time. When any period of time is referred to in these Contract Documents by days, it shall be computed to exclude the first and include the last day of the period, provided, however, that if the last day of the period falls on a Saturday, Sunday, or legal holiday, that day shall be omitted from the computation.

Interest. Any monies not paid when due to either party under this Contract shall bear interest at the rate of ten (10%) percent per annum, commencing on the forty-sixth (46th) day after demand for payment thereof after such monies are lawfully due and payable, except as otherwise provided in these Contract Documents.

Remedies Cumulative. No remedy herein reserved to Authority is intended to be exclusive of any other remedy, but each and every such remedy shall be cumulative and shall be in addition to any other given in the Contract as now or hereafter existing or at law, equity, or by statute.

Non-waiver. The failure of the Authority to notify the Contractor of any default under this Contract shall not be deemed to be a waiver by Authority of any continuing default by Contractor of any term, covenant, or condition set forth in this Contract, nor of the Authority's right to declare a default for any such continuing breach, and the failure of Authority to insist upon strict performance of any of the terms, covenants, or conditions of the Contract, or to exercise any option in the Contract in any one or more instances, shall not be construed as a waiver or relinquishment of any such terms, covenants, conditions or options, but the same shall be and remain in full force and effect.

Severability. In case any one or more provisions set forth in the Contract shall for any reason be held invalid, illegal, or unenforceable in any respect, any such invalidity, illegality, or unenforceability shall not affect any other provision of the Contract, and this Contract shall be construed as if such invalid, illegal, or unenforceable provision had never been incorporated therein so long as the deletion of such provision does not, in the Authority's judgment, materially alter this Contract.

No Third Party Beneficiaries. This Contract are not intended and shall not be deemed or construed, to confer any rights, powers, or privileges on any person, firm, partnership, corporation, or other entity not a party to this Contract except as may be expressly provided in the Contract to the contrary.

Oral Agreements. No oral order, objection, claim, or notice by any party to the other shall affect or modify any of the terms or obligations contained in this Contract, and none of the provisions of the Contract shall be held to be waived or modified by reason of any act whatsoever, other than by a definitely agreed waiver or Modification in writing and executed in the manner required in this Contract by authorized officers or representatives of the Parties. No evidence shall be introduced in any proceeding of any other waiver or modification.

Counterparts. This Contract may be executed in any number of counterparts, and each of such counterparts for all purposes shall be deemed to be an original, and all of such counterparts should constitute one and the same agreement.

Governing Law. The Contract, including the Contract Documents, shall be governed by the laws of the State of California.

Attorneys' Fees. If either party commences an action against the other party arising out of or in connection with this Agreement or its subject matter, the prevailing party shall be entitled to recover reasonable attorneys' fees and costs of suit from the losing party.

Services Prior to Execution. Notwithstanding the fact that this Contract is executed as of the date first set forth above, the Parties recognize that a portion of the Work required under the Contract may have been performed prior to such date, all of which Work shall be governed by the terms and conditions of this Contract and shall be deemed to be a part of the Work. Without limiting the foregoing, all of Contractor's liabilities and obligations to Authority shall apply to all Work and services provided by the Contractor for the Work prior hereto, notwithstanding the fact that the Work may have been performed prior to the date hereof pursuant to prior negotiations, representations, agreements, understandings, or otherwise.

Survival of Rights. Any indemnity, warranty, guarantee given by the Contractor to the Authority under this Contract shall survive the expiration or termination of this Contract and shall be binding upon Contractor until any action under this Contract is barred by the applicable statute of limitations.

IN WITNESS WHEREOF, the parties hereto have executed this Construction Agreement as of the date first hereinabove written.

"OCFA"

ORANGE COUNTY FIRE AUTHORITY

Date:_____ By:_____

Jeff Bowman, Fire Chief

APPROVED AS TO FORM.

By:_____
DAVID E. KENDIG
GENERAL COUNSEL

Date:_____

ATTEST:

_____
Sherry A.F. Wentz
Clerk of the Board

"FIRM"

WESTERN AUDIO VISUAL

Date: 11/1/16 By: Catherine Schellin

Catherine Schellin, President
DIR# 1000008082 Expires 06/30/2017
Contractor's State License No. 871609
(Expiration Date 1/31/2018)

ORANGE COUNTY FIRE AUTHORITY
INVITATION FOR FORMAL BID

PURSUANT TO CALIFORNIA UNIFORM PUBLIC CONSTRUCTION COST ACCOUNTING ACT (PCC22034) FOR PROJECTS GREATER THAN $175,000

AUDIO/VISUAL SYSTEMS UPGRADE AT RFOTC

DATE: August 8, 2016 **IFB: RO2155**

The Orange County Fire Authority (OCFA or Authority) will receive sealed bids from qualified contractors for the upgrade of audio/visual equipment in the OCFA Boardroom and five classrooms at the Regional Fire Operations and Training Center (RFOTC) at, 1 Fire Authority Rd., Irvine, CA 92602.

Pursuant to SB854, no contractor or subcontractor may be awarded a bid for a public works project unless registered with the Department of Industrial Relations (DIR) per California Labor Code section 1725.5. This project is a public work and is subject to compliance monitoring and enforcement by the DIR.

Bids will be received no later than 11:00 A.M., Wednesday, September 14, 2016

Please provide one (1) original and two (2) copies of your bid submitted in a sealed envelope with the bid number, bidder's business name, and due date clearly indicated on the envelope. Bids must be delivered to Orange County Fire Authority, Purchasing Department, 1 Fire Authority Road, Building C, Irvine, CA 92602 on or before the time and date listed above, at which time and place bids will be publicly opened and read aloud. **Please allow time to hand deliver bids as Building C, where the Purchasing Department is located, is now locked and all visitors must check in at the front counter located in Building A.**

LATE BIDS WILL NOT BE ACCEPTED

A mandatory pre-bid meeting and job walk for prime contractors will be held on Wednesday, August 24, 2016 at 10:00 a.m. at Orange County Fire Authority Regional Fire Operations and Training Center (RFOTC), 1 Fire Authority Rd., Irvine, CA 92602. Contractors are required to attend the entirety of the mandatory pre-bid meeting and job walk. Please RSVP to attend the pre-bid meeting through Planet Bids.

Required Contractors' License: C-7; C-10
Bid Security Required: 10% of the maximum amount of the Bid in the form of Bid Bond or Certified Check.
Bonds Required: Performance and Labor & Materials; each 100% (successful bidder)
Engineer's Estimate: $652,080.72

If you have any questions, please contact Rothchild Ong, Assistant Purchasing Agent at (714) 573-6642 or via e-mail at: rothchildong@ocfa.org.

Sincerely,

Rothchild Ong
Assistant Purchasing Agent

Table of Contents

SECTION I: INVITATION FOR BID 3
SECTION II: INSTRUCTIONS TO BIDDERS 5
SB854 DEPARTMENT OF INDUSTRIAL RELATIONS REGISTRATION 7
SECTION III: SPECIFICATIONS/SCOPE OF WORK 14
SECTION IV: BID DOCUMENTS 15
BIDDER'S CHECKLIST 15
1. BID FORM 16
1. BIDDER'S INFORMATION (REQUIRED) 19
2. LIST OF PAST PROJECTS 20
3. LIST OF CURRENT PROJECTS 21
4. CONTRACTOR'S LICENSING STATEMENT 22
5. LIST OF SUBCONTRACTORS 23
6. DESIGNATOR OF SURETIES 24
7. NON-COLLUSION DECLARATION 25
8. CERTIFICATION OF NON-DISCRIMINATION BY CONTRACTORS 26
9. DEBARMENT AND SUSPENSION CERTIFICATION 27
10. CERTIFICATION OF SITE EXAMINATION 28
11. PARTY AND PARTICIPANT DISCLOSURE FORMS 29
BIDDER'S BOND 36
SECTION V: POST BID DOCUMENTS 38
PREVAILING WAGE CERTIFICATION 39
WORKER'S COMPENSATION INSURANCE CERTIFICATION 40
FAITHFUL PERFORMANCE BOND 41
PAYMENT BOND 43
CONSTRUCTION CONTRACT 45

SECTION I: INVITATION FOR BID

NOTICE IS HEREBY GIVEN that the Orange County Fire Authority (OCFA) will receive sealed bids for the public works construction project for the installation of upgraded audio/visual equipment at the OCFA Boardroom and five classrooms at the Regional Fire Operations and Training Center (RFOTC) located at 1 Fire Authority Rd., Irvine, CA 92602 as specified herein.

OCFA PROJECT OBJECTIVES

OCFA staff has prioritized objectives for the upgrade project as follows:

Phase 1

- Replace components of the audio microphone and recording system in the Board Room so that it is fully operable.

Phase 2

- Replace outdated equipment to insure long term functionality in the Board Room at the current functional level designed and allow for additional enhancements such as conversion to high definition, addition of video mute from projector/AV system on the Distributed Applications and Interoperable Systems (DAIS) screens, update video camera to support live streaming, and addition of one video camera.

Phase 3

- Update the current hardware in classrooms 1 - 5, retaining current functionality.

Phase 4 (Update of functionality)

- Addition of a voting system to the Board Room with the ability to display vote count so that the Clerk of the Authority can better track and manage Board activities.
- Integration of the Board Room system with the three adjacent classrooms to allow for audio and video of Boardroom activities from these separate rooms.
- Add Board Room audio and video to Building A main lobby.

Phase 5 (Add video teleconferencing functionality)

- Addition of video teleconferencing functionality in Board Room for Board members to participate in meetings remotely.
- Addition of video teleconferencing functionality in Classroom 1 (also known as Board Breakout Room) for Board members to participate in meetings remotely.
- Ability to broadcast as a training tool via the OCFA Intranet to other classrooms at RFOTC and any of the OCFA fire stations (71 stations) located throughout Orange County.

Bids are to be delivered to the Orange County Fire Authority, Purchasing Section, 1 Fire Authority Road, Building C, Irvine, California 92602, no later than 11:00 A.M. on September 14, 2016, at which time and place bids will be publicly opened and read aloud. Each bid shall be in accordance with the Invitation for Bids.

Pursuant to Public Contract Code Section 20171 a bid bond is required for 10% of the amount bid. Bids must be accompanied by a cashier's check payable to the Orange County Fire Authority or a bid bond issued by a corporate surety as a guarantee that the bidder will enter into proposed contract if same is awarded. ***THE SIGNATURE (OF THE BIDDER) ON THE BID BOND MUST BE NOTARIZED.***

The bid documents and drawings are available electronically without charge through the Orange County Fire Authority, Purchasing website. To obtain a copy of the bid documents go to http://www.ocfa.org, click on “Bids & Requests for Proposals” using the left navigation column and click on “Bid Opportunities”. If your company is not currently registered, you will need to click on “register as a bidder.”

Bidders are required to attend a **mandatory** pre-bid meeting and job walk for prime contractors to be held on **Wednesday, August 24, 2016 at 10:00 a.m.** at 1 Fire Authority Rd. Irvine, CA 92602. ***Attendance at the pre-bid meeting is a condition to submit a bid.***

ENGINEER’S ESTIMATE: The engineer’s estimated total cost for this Contract is $652,080.72. This estimate is intended to serve merely as a guideline of the magnitude of work. Neither the bidders nor the contractor shall be entitled to claims because of any inaccuracy in the estimated cost range.

If you have any questions, please contact Rothchild Ong, Assistant Purchasing Agent at (714) 573-6642 or via e-mail at: rothchildong@ocfa.org.

SECTION II: INSTRUCTIONS TO BIDDERS

Please read these instructions carefully. If you do not submit a complete bid, OCFA may determine that your bid is non-responsive, in which case your bid will be rejected.

ADDENDA

The OCFA reserves the right to revise the bid documents prior to the bid opening date. Revisions, if any, shall be made by written addenda. Pursuant to Public Contract Code Section 4104.5, if OCFA issues an Addendum later than seventy-two (72) hours prior to the deadline for submission of bids, and the Addendum requires material changes, additions or deletions to the description of the work to be performed or the content, form or manner of submission of bids, OCFA will extend the deadline for submission of bids by at least seventy-two (72) hours. Otherwise, OCFA may determine, at its sole discretion, whether an Addendum requires that the date set for opening bids be postponed. Announcement of a new date, if any, will be made by Addenda. All bidders will be notified by e-mail when an addendum is posted to Planet Bids (OCFA's bid management system).

All Addenda issued before the time bids are due shall form part of the contract documents. It is the bidder's responsibility to be familiar with Addenda issued. OCFA will deem any bid that fails to acknowledge all Addenda to be non-responsive. Bidders must acknowledge the Addenda in writing on the form provided in the bid documents.

BASIS OF AWARD

The OCFA shall award the contract to the lowest responsive, responsible bidder as required by law. The OCFA reserves the right to reject any or all bids. At the time of contract award, the successful Bidder and subcontractors are required to hold the State of California Contractor's License(s) and DIR registration. The OCFA may reject any bid which, in its sole opinion, does not accurately reflect the cost to perform the work as compared to other bids received and/or to project estimates. In addition, because the OCFA may elect to include or exclude any of the bid items and alternate bid items (if applicable) at its sole and absolute discretion, each bidder must ensure that each bid item contains a proportionate share of profit, overhead and other costs or expenses which will be incurred by the bidder. The OCFA may deem any bid which unevenly weights or allocates costs, including but not limited to overhead and profit, to one or more particular bid items as non-responsive. No contract will be executed unless the bidder is licensed in accordance with the provisions of the State Business and Professions Code.

Award of this bid and issuance of a Purchase Order is subject to approval by OCFA's Executive Committee.

TENTATIVE SCHEDULE OF IMPORTANT DATES

Invitation for Bid (IFB) Issue Date **August 8, 2016**
Pre-Bid Conference/ Job-Walk (attendance is mandatory) **August 24, 2016 10:00 AM**
Final day to submit Questions through online Q&A **August 22, 2016 11:00 AM**
Proposal Due Date **September 14, 2016 11:00 AM**
Executive Committee **October 2016**

BID ACCEPTANCE PERIOD

The bidder shall guarantee the total bid price for sixty (60) working days after the bid opening.

BID DOCUMENTS & FORMS

Bid submittals are to be prepared using the bid forms which are included in the invitation for bid document. Bids shall be executed by an authorized signatory. Bidders are to fill in all blank spaces (insert "N/A" where the answer is not applicable). Bidders are to initial all delineations, alterations, or

erasures on the bid forms. Deviations in the bid form may result in the bid being deemed non-responsive.

As a condition of bidding, and in accordance with the provisions of Section 20101 of the California Public Contract Code, prospective bidders are required to submit all the bid forms listed in the Bidder's Checklist. Failure to do so may result in the rejection of the bid.

BID OPENING

All the bids read aloud by the OCFA will be subject to further evaluation with respect to responsiveness of the bid and responsibility of the bidder.

BID PRICING

Bidders shall give itemized pricing and timeline in the schedule of values table for project completion. No aggregate bids will be considered. The bid must state the amount for which the bidder offers to supply all labor, materials, equipment, tools, transportation, services and applicable taxes to perform all work required by the contract documents. Bids shall not contain any conditions, limitations or provisions for the work to be done. Alternative bids will not be considered unless requested. The bidder shall set forth for each item of work, in clearly legible figures, a unit item price and a total for each item in the respective spaces provided. In case of a variation between the unit price and the totals shown by the bidder, the unit price will be considered to be the bid. In case of discrepancy between the numerical lump sum price and the written lump sum price, the total lump sum price stated in writing shall prevail.

BID PROTEST PROCEDURE

A bidder who has submitted a bid may file a "protest" of a contract award by submitting a request in writing to the Purchasing Manager. In order for a protest to be considered valid, the following stipulations must be met:

1. The appeal must be submitted in writing within five (5) calendar days after notice to award is issued.
2. The appeal must clearly specify in detail the grounds for the protest i.e. identify the violation of a specific State or Federal law.
3. The appeal must include all relevant and supporting documentation with the protest at the time of filing.

If the protest does not comply with each and every one of these stipulations, the appeal will be rejected as invalid. If the protest is valid, the Purchasing Manager will review the information provided, and provide a written response to the bidder.

CAMPAIGN CONTRIBUTIONS DISCLOSURE

In conformance with the statutory requirements of the State of California Government Code Section 84308, part of the Political Reform Act and Title 2, California Code of Regulations 18438 through 18438.8, regarding campaign contributions to members of appointed Boards of Directors, the Contractor is required to complete the Party and Participant Disclosure Forms provided in the appendix of this solicitation, if applicable. Bidder is required to submit only one copy of the completed form(s) as part of its bid submittal. The Contractor and subcontractors must complete the form entitled "Party Disclosure Form". Lobbyists or agents representing the Contractor in this bid must complete the form entitled "Participant Disclosure Form". Reporting of campaign contributions is a requirement from the bid submittal date up and until the OCFA Board of Directors takes action.

COMPLETION OF PROJECT

The work must be completed within 120 calendar days after the commencement date stated in the Notice to Proceed.

COMPLIANCE WITH LAWS

All bids shall comply with current and applicable federal, state, and local laws relative thereto.

CONTRACTORS LICENSING REQUIREMENTS

Contractor shall possess a valid California **C-7, C-10** or other appropriate Contractor's license at the time of bid submission, pursuant to California Public Contract Code Section 3300 and Business and Professions Code Section 7028.15. The successful bidder must maintain the license throughout the duration of this contract.

The prime contractor shall possess a valid California Contractor's license required for this project, at the time of submitting the bid. The bidder shall be licensed as a contractor in accordance with the provisions of California Business and Professions Code Chapter 9, Article 5 Licensing 7065-7077. The OCFA may deem any bidder who fails to possess the required license to be non-responsive.

Pursuant to Section 7028.15 of the Business and Professions Code and Section 3300 of the Public Contract Code, all bidders must possess proper licenses for performance of this contract at the time of bid submission. Subcontractors must possess the appropriate licenses for each specialty subcontracted. Pursuant to Section 7028.5 of the Business and Professions Code, the OCFA shall consider any bid submitted by a contractor not currently licensed in accordance with California law and pursuant to the requirements found in the bid documents to be nonresponsive, and the OCFA shall reject the bid. The OCFA shall have the right to request evidence of all valid license(s) currently held by the bidder and each of the subcontractors listed in the bid before awarding the contract. Bidders shall provide evidence of valid licenses satisfactory to the OCFA within five (5) calendar days. Please also note that, pursuant to Public Contract Code Section 20676, sellers of "mined material" must be on an approved list of sellers published pursuant to Public Resources Code Section 2717(b) in order to supply mined material for this contract.

SB854 DEPARTMENT OF INDUSTRIAL RELATIONS REGISTRATION

No contractor or subcontractor may be listed on a bid offer for a public works project submitted on or after March 1, 2015 unless registered with the Department of Industrial Relations pursuant to Labor Code Section 1725.5, with limited exceptions from this requirement for bid purposes only under Labor Code Section 1771.1(a). No contractor or subcontractor may be awarded a contract for public work, or engage in the performance of any public works project awarded on or after April 1, 2015 unless registered with the Department of Industrial relations pursuant to Labor Code Section 1725.5. This contract is subject to compliance monitoring and enforcement by the Department of Industrial Relations. Listed subcontractors must be registered with the Department of Industrial Relations website. Pursuant to SB854, the DIR registration number of each subcontractor must be identified and failure to identify this number could categorize your bid as non-responsive. In addition, OCFA reports all public works contracts to the DIR within 5 days of the contract award date.

In accordance with Section 1773.2 of the California Labor Code, the contractor shall post a copy of the determination of prevailing rate of wages at each job site.

Travel and subsistence payments to each workman needed to execute the work shall be made as such travel and subsistence payments are defined in the applicable collective bargaining agreements filed in accordance with Section 1773.8 of the Labor Code.

The OCFA will not recognize any claim for additional compensation because of the payment by the contractor of any wage rate in excess of the prevailing wage rate set forth in the contract. The possibility of wage increases is one of the elements to be considered by the contractor in determining the bid, and

will not under any circumstances be considered as the basis of a claim against the OCFA on the contract.

DEBARMENT OF CONTRACTORS

In accordance with the provisions of the Labor Code, contractors or subcontractors may not perform work on a public works project with a subcontractor who is ineligible to perform work on a public project pursuant to Section 1777.1 or Section 1777.7 of the Labor Code and Federal "Excluded Parties List System". Any contract on a public works project entered into between a contractor and a debarred subcontractor is void as a matter of law. A debarred subcontractor may not receive any public money for performing work as a subcontractor on a public works contract. Any public money that is paid to a debarred subcontractor by the contractor for the Project shall be returned to the OCFA. The contractor shall be responsible for the payment of wages to workers of a debarred subcontractor who has been allowed to work on the Project. In order to prohibit the procurement of any goods or services ultimately funded by Federal awards from debarred, suspended or otherwise excluded parties, each Contractor will be screened at the time of bid response to ensure the Contractor, its principal and their named subcontractors are not debarred, suspended or otherwise excluded by the United States Government in compliance with the requirements of 2 Code of Federal Regulations (CFR) 200.12 7 Code of Federal Regulations (CFR) 3016.35, 28 CFR 66.35, 29 CFR 97.35, 34 CFR 80.35, 45 CFR 92.35 and Executive Order 12549.

DESIGNATION OF SUBCONTRACTORS

Pursuant to State law, the bidder must designate the name and location of each subcontractor who will perform work or render services for the prime bidder in an amount that exceeds one-half of one percent (.5%) of the bidder's total bid amount, as well as the portion of work each such subcontractor will perform at the time the bid is submitted. Pursuant to Public Contract Code Section 4104, the OCFA has not implemented 3(A) which would allow bidders an additional twenty-four (24) hours (after the deadline for submission of bids) to submit the information about each subcontractor.

DISQUALIFICATION OF BIDDERS

No bidder shall be allowed to make, submit or be interested in more than one bid. No person, firm, corporation, or other entity may submit a sub-proposal to a bidder, or quote prices of materials to a bidder when also submitting as a prime on the same project.

EQUAL EMPLOYMENT OPPORTUNITY

The Orange County Fire Authority is an equal opportunity employer and requires all Bidders to comply with policies and regulations concerning equal employment opportunity.

EXECUTION OF CONTRACT

As required herein the bidder to whom an award is made shall execute the contract in the amount determined by the bid documents. The OCFA may require appropriate evidence that the persons executing the contract are duly empowered to do so.

INSPECTION OF SITE/MANDATORY PRE-BID MEETING

Each prospective bidder is responsible for becoming familiar with the conditions of the project site as well as those relating to the construction and labor of the project, to fully understand the facilities, conditions, difficulties and restrictions which may impact the completion of the project. Attendance by a representative of each prospective bidder at the mandatory pre-bid meeting as stated in the bid is required. Any bid received by a contractor not represented at the mandatory pre-bid conference will be rejected and deemed non-responsive.

INDEMNIFICATION

Bidder shall protect and indemnify the OCFA, the Board of Directors, and all of its or their officers, agents and servants against any claim or liability arising from or based on Bidder's violation of any existing or future state, federal, and local laws, ordinances, regulations, orders or decrees pertaining to Bidder's submittal.

Bidder agrees to protect, defend, indemnify, save and hold harmless the OCFA and its officers, officials, employees and volunteers from any and all claims, liabilities, expenses, or damages of any nature, including attorney fees, for injury to or death of any person (Bidder's employees included), and for injury to any property, including consequential damages of any nature resulting therefrom, arising out of or in any way connected with the performance of this contract, except that the indemnity obligation of Bidder shall be reduced by an amount proportional to the active negligence of the OCFA, if any.

Bidder shall comply with all of the provisions of the workers' compensation insurance laws and safety in employment laws of the State of California, including the applicable provisions of Divisions 4 and 56 of the California Labor Code and all amendments thereto and regulations promulgated pursuant thereto, and all similar state, federal, or local laws applicable; and contractor shall indemnify and hold harmless the OCFA from and against all claims, liabilities, expenses, damages, suits, actions, proceedings and judgments, of every nature and description, including attorney fees, that may be presented, brought or recovered against the OCFA for or on account of any liability under or failure to comply with any of said laws which may be incurred by reason of any work performed under this contract by Bidder or any subcontractor or others performing on behalf of Bidder.

The OCFA does not and shall not waive any rights against Bidder which it may have by reason of the above hold harmless agreements, because of the acceptance by the OCFA or the deposit with the OCFA by contractor of any or all of the required insurance policies.

The Bidder's hold harmless agreement shall apply to all liabilities, expenses, claims, and damages of every kind (including but not limited to attorney fees) incurred or alleged to have been incurred, by reason of the operations of Bidder or any subcontractor or others performing on behalf of Bidder whether or not such insurance policies are applicable.

Bidder shall require any and all subcontractors to afford the same degree of indemnification to the OCFA and its elected and appointed boards, officers, agents, and employees that is required of Bidder(s) and shall incorporate identical indemnity provisions in all contracts between Bidder and his/her subcontractors.

In the event that Bidder and the OCFA are sued by a third party for damages caused or allegedly caused by negligent or other wrongful conduct of Bidder, or by a dangerous condition of the OCFA's property created by Bidder or existing while the property was under the control of Bidder, the Bidder shall not be relieved of its indemnity obligation to the OCFA by any settlement with any such third party unless that settlement includes a full release and dismissal of all claims by the third party against the OCFA.

INSURANCE

The successful bidder shall procure the insurance in the form and in the amount specified in the bid documents. Failure to do so may result in forfeiture of the bid guarantee. No time extensions or extra payments shall be made to contractor for delays it may encounter in obtaining such coverage. Coverage shall be provided by admitted insurers with an A.M. Best's rating of no less than A-VII, licensed to do business in California, and otherwise satisfactory to OCFA. OCFA shall not be liable for any costs or expenses incurred by any bidder in preparation or submission of bids in connection with meeting the requirements of this Section in the event OCFA chooses not to award the contract, or in the event OCFA awards the contract to another as permitted by law.

Contractor shall not commence work under this contract until he/she has obtained all insurance required under this section, including any and all endorsements, and the insurance has been approved by the OCFA as to form, amount, and carrier, nor shall Contractor allow any subcontractor to commence any work until all similar insurance required of the subcontractor has been obtained and approved. Neither the failure of Contractor to supply specified insurance policies and coverage, nor the failure of the OCFA to approve same shall alter or invalidate the provisions of this contract. The Contractor agrees to:

1. Obtain insurance coverage of the type and amount required and keep such insurance coverage in force throughout the life of this contract and as required by written contract. All policies will contain an endorsement providing that written notice of termination, cancellation or policy changes will be delivered in accordance with the policy provisions.
2. The comprehensive general liability insurance will include the OCFA as an additional insured with respect to liability arising out of the performance of this contract. Comprehensive automobile liability insurance is also required. The Contractor agrees that the insurance hereunder will be primary and that any insurance carried by the OCFA will be excess and not contributing.
3. Provide and maintain minimum insurance limits as applicable.

Contractor will present to the OCFA written evidence (Certificates of Insurance and the Additional Insured Endorsement) of compliance with Items 1, 2 and 3 above. Said evidence shall be to the OCFA's Risk Management satisfaction.

INSURANCE - <u>WORKERS' COMPENSATION INSURANCE</u>

Contractor shall obtain and maintain during the life of this contract workers' compensation insurance and, if any work is sublet, Contractor shall require all subcontractors to obtain workers' compensation insurance. Workers' Compensation must have a limit of at least $1,000,000 each accident/$1,000,000 each employee for disease. A Waiver of Subrogation is required.

All workers' compensation insurance policies shall provide that the insurance must notify OCFA of cancellation or changes in the policy and notice will be delivered in accordance with the policy provisions.
Contractor is aware of the provision of Section 3700 of the Labor Code, which requires every employer to be insured against liability for Workman's Compensation or undertake self-insurance in accordance with the provisions of that Code, and will comply, with such provisions before commencing the performance of the work of this contract.

INSURANCE - <u>LIABILITY INSURANCE COVERAGE</u>

Contractor shall obtain and maintain during the life of this contract the following insurance coverage:

1. General Liability including operations, products and completed operations with a limit of $1,000,000 each occurrence for bodily injury, personal injury and property damage/$2,000,000 aggregate. If commercial general liability insurance or other form with a general aggregate limit is used, either the general aggregate limit shall apply separately to the project or the general aggregate limit shall be twice the required occurrence limit. For those businesses that are self-insured, a written declaration by the principal of the business should be provided.
2. Automobile liability, including owned, hired, and non-owned vehicles with a limit of $1,000,000 each accident; $1,000,000 uninsured motorist.

Coverage for commercial general liability and automobile liability insurance shall be at least as broad as the following:

1. Insurance Services Office (ISO) Commercial General Liability Coverage (Occurrence Form CG0001)
2. Insurance Service Office (ISO) Business Auto Coverage (Form CA 0001) covering any auto.

Coverage shall be provided by admitted insurers with an A.M. Best's Key Rating of at least A-VII.

Endorsements to the policies providing the above insurance shall be obtained by Contractor, adding the following three provisions:

1. **Additional Insured (for commercial general liability only)**

   "OCFA, its officers, officials, employees, and volunteers are to be covered as additional insured with respect to the subject project and agreement."

2. **Other Insurance**

   "Any other insurance maintained by the Orange County Fire Authority shall be excess and not contributing with the insurance provided by this policy."

All insurance carriers utilized by the Contractor or any subcontractor under this contract shall be approved by the California Department of Insurance to transact business in the State of California. The types of services provided under this contract may further require Contractor's insurance carrier(s) to be admitted insurers in the State of California.

INTERPRETATION OF BID DOCUMENTS

Discrepancies in, and/or omissions from the Specifications or other bid documents or questions as to their meaning shall be immediately brought to the attention of the Purchasing Manager by submission of a written request for interpretation or correction.

Any interpretation of the bid documents will be made only by addendum duly issued electronically to each bidder registered on the prospective bidder's list. The OCFA will not be responsible for any explanations or interpretations provided in any other manner. No person is authorized to make any oral interpretation of any provision in the bid documents to any bidder, and no bidder should rely on any such oral interpretation.

LIQUIDATED DAMAGES

Contractor agrees that if such work is not completed within the aforementioned period and/or pursuant to any such completion schedule, construction schedule or project milestones developed pursuant to provisions of the contract, it is understood, acknowledged and agreed that OCFA will suffer damage. Pursuant to Government Code Section 53069.85, contractor shall pay OCFA liquidated damages in the sum of one thousand ($1,000) per day for each calendar day occurring after the scheduled completion date that the contractor fails to achieve contract completion.

MODIFICATIONS OF BIDS

Each bidder shall submit its bid in strict conformity with the requirements of the bid documents. Unauthorized additions, modifications, revisions, conditions, limitations, exclusions or provisions attached to a bid may render it non-responsive and may cause its rejection. Bidders shall not delete, modify, supplement printed matter on the bid forms, or make substitutions thereon. ORAL, TELEPHONIC, FACSIMILE, AND ELECTRONIC BIDS OR MODIFICATIONS WILL NOT BE CONSIDERED.

NON-COLLUSION AFFIDAVIT

Bidder shall declare that the only persons or parties interested in the proposal as principals are those named therein; that no officer, agent, or employee of the OCFA is personally interested, directly or indirectly, in the proposal; that the proposal is made without connection to any other individual, firm, or corporation making a bid for the same work; and that the proposal is in all respects fair and without collusion or fraud. The Non-Collusion Affidavit shall be executed and submitted with the proposal.

NON-DISCRIMINATION

Contractor covenants that, by and for itself, its successors, and assigns, including its subcontractors and suppliers, that there shall be no discrimination against or segregation of, any person or group of persons on account of race, color, creed, religion, gender, marital status, national origin, sexual orientation, or ancestry in the performance of this contract. Contractor shall take steps to ensure that applicants for any job and employees are treated without regard to their race, color, creed, religion, gender, marital status, national origin, sexual orientation, or ancestry in full compliance with applicable federal, state, and local laws and regulations.

Contractor shall not engage in, nor permit its agents, including its subcontractors and suppliers, to engage in discrimination in employment of persons or provision of services or supplies, on the grounds of race, color, creed, religion, gender, marital status, national origin, sexual orientation, or ancestry.

Contractor, and contractor's subcontractors and suppliers, shall employ fair employment practices with regard to all employees and all applicants for employment and shall act in accordance with all applicable federal, state, and local laws and regulations relating to such fair employment practices.

In furtherance of such obligation, contractor agrees that contractor, subcontractors, and suppliers shall not discriminate in employment and/or provision of services under this contract and all employment practices shall be without regard to a person's race, color, creed, religion, gender, national origin, age, ancestry, physical handicap, medical condition, marital status, all in accordance with applicable federal, state, and local laws or regulations.

Fair employment practices shall include, but not be limited to, employment, upgrading, demotion or transfer, recruitment or recruitment advertising, layoff or termination, rate of pay or other form of compensation and selection for training including apprenticeship.

In the performance of the terms of the bid documents, contractor agrees that contractor will not engage in nor permit such subcontractors as contractor may employ to engage in discrimination against any employee or applicant for employment on the basis of race, sex, color, religion, ancestry, national origin, marital status, age or as an otherwise qualified handicapped individual. This prohibition shall pertain to employment, upgrading, demotion, or transfer, recruitment advertising, layoff or termination, rates of pay and other forms of compensation, selection for training, including apprenticeship, and any other action or inaction pertaining to employment matters.

NON-DISCRIMINATION AFFIDAVIT

Labor Code Section 1735 requires that no discrimination be made in the employment of persons upon public works because of race, religious creed, color, national origin, ancestry, physical handicap, medical condition, marital status, or sex of such persons, except as provided in Government Code Section 12940. Bidder shall declare that it does not discriminate in its employment with regard to such factors. The Non-Discrimination Affidavit (on enclosed form) shall be executed and submitted with the proposal.

PREVAILING WAGE

This project is a public work in the State of California, funded in whole or in part with public funds. Therefore, the higher of the two prevailing wage rates, federal or state, will be enforced. The work is subject to the payment of not less than prevailing wages under Labor Code Section 1770 et seq. Contractor agrees to comply with all related provisions of the Labor Code, including but not limited to, the provisions of Labor Code Section 1775 relating to payment of prevailing wages, Section 1777.5 relating to employment of apprentices and Section 1811-1813 relating to the payment of overtime. Failure to comply with the proper prevailing wage requirements may result in penalty of up to $200 per

day per worker. Failure to comply with apprenticeship requirements may result in penalty of $100-$300 for each calendar day of violation. Failure to pay proper overtime rate may result in a penalty of $25 per day per worker. Bidders are hereby notified that the Director of Industrial Relations has ascertained the general prevailing rate of per diem wages and the rates for overtime and holiday work in the locality in which the work is to be performed for each craft, classification or type of worker needed to perform the work under the contract which will be awarded to the successful bidder.
This information is available at the Department of Industrial Relations website: http://www.dir.ca.gov/oprl/DPreWageDetermination.htm. Bidders are further notified that this project is subject to compliance monitoring and enforcement by the Department of Industrial Relations. Further information on Compliance Monitoring Unit requirements can be found at: https://www.dir.ca.gov/Public-Works/PublicWorksEnforcement.html.

QUESTIONS AND COMMENTS

Questions and comments regarding this solicitation must be submitted in writing, no later than five (5) days before the Submittal Deadline.

REJECTION OF BIDS

The OCFA reserves the right to reject any or all bids or waive any irregularity in any one or all bids received.

SIGNATURE AUTHORITY

All bids submitted shall be executed by the bidder or its authorized representative. Bidders may be asked to provide evidence in the form of an authenticated resolution of its Board of Directors or Power of Attorney as proof of the capacity of the person signing the bid to bind the bidder to the bid and any contract formed as a result. If a bidder is a joint venture or partnership, all parties must submit proof of authorization. All parties shall be jointly liable for any and all of the duties and obligations the bidder assumed by participating in the bid and any contract awarded therefrom and the bid shall be executed on behalf of the joint venture or partnership in its legal name.

SUBSTITUTION OF SECURITY

Pursuant to Public Contract Code Section 22300, the Contractor shall be permitted to substitute securities for any monies withheld by the OCFA to ensure performance under this Contract at the request and expense of the Contractor if he/she chooses to do so.

WITHDRAWAL OF BID

Bids may be withdrawn in writing prior to the time specified in the invitation for bid. Telephonic or oral withdrawals will not be considered.

WORKERS' COMPENSATION CERTIFICATION FORM

Each bidder shall submit the Contractor's Certificate Regarding Workers' Compensation form. Section 3700 of the State Labor Code requires that every employer shall secure the payment compensation by either being insured against liability to pay compensation with one or more insurers or by securing a certificate of consent to self-insure from the State Director of Industrial Relations.

SUCCESSFUL BIDDER RESPONSIBILITY

The apparent successful bidder should begin to prepare the following documents: (1) A Performance Bond and the Payment (Labor and Materials) Bond; and (2) the required insurance certificates with required endorsements.

Once the OCFA notifies the bidder of the intent to award, the apparent successful bidder will have ten (10) calendar days to execute the contract, provide all required bonds, and other required and pertinent documentation. Notice to proceed begins ten (10) calendar days from the date of the contract and the date the purchase order is issued.

The successful contractor or any designated subcontractors shall not perform any work on the project prior to attending the pre-construction conference and executing the appropriate certification.

BOND REQUIREMENTS (SUCCESSFUL BIDDER): A 100% Labor, Materials and Payment Bond and a 100% Faithful Performance Bond may be required from the successful bidder prior to the execution of the contract. These bonds shall be in the form and the amounts set forth in the contract documents.

PAYMENT (LABOR AND MATERIALS) AND PERFORMANCE BOND

Within the time specified in the bid documents, the bidder to whom a contract is awarded shall deliver to the OCFA, a Payment (Labor and Materials) Bond, in an amount equal to one hundred (100%) of the total bid amount and a 100% Faithful Performance Bond in a form supplied by the OCFA included in the bid documents. The surety supplying the bond must be an admitted surety insurer, as defined in Code of Civil Procedure Section 995.120, authorized to do business as such in the State of California and satisfactory to the OCFA.

SECTION III: SPECIFICATIONS/SCOPE OF WORK

In 2015, OCFA solicited proposals for the creation of the scope of work, specifications, and drawings for the upgrade of Audio/Visual equipment for the boardroom and five classrooms at the RFOTC. TK1SC was awarded the project and the resulting scope of work, specifications, and drawings are provided.

OCFA is now ready to begin upgrading equipment and is looking to select an AV contractor to furnish and install the equipment as specified.

The project includes all related appurtenance required for audio/visual systems upgrades as required by the detailed plans, specifications, bid and contract documents for the above stated project. The work to be performed is described in the Scope of Work/Specifications (Attachment A), the detailed plans, and bid and contract documents.

SECTION IV: BID DOCUMENTS

BIDDER'S CHECKLIST

SUBMIT THIS BIDDER'S CHECKLIST WITH YOUR BID DOCUMENTS. Bidders shall complete and submit all required bid documents marked with an "X" in the "REQUIRED" column for bids to be considered responsive.

Attendance at the pre-bid meeting and job walk is a requirement for submitting a bid.

REQUIRED BID DOCUMENTS

[X] **BIDDER'S CHECKLIST**
[X] **BID FORM**
[X] **BID BOND (DEPOSIT)** in the form of:
[ ] Certified Check [ ] Cashier's Check [ ] Bidder's Bond
[X] **BID PRICING PAGE (ATTACHMENT B) AND SCHEDULE**
[X] **DETAILED LABOR AND FEE BREAKDOWN (ATTACHMENT C)**
[X] **BIDDERS INFORMATION**
[X] **LIST OF PAST PROJECTS**
[X] **LIST OF CURRENT PROJECTS**
[X] **CONTRACTOR'S LICENSING STATEMENT**
[X] **LIST OF SUBCONTRACTORS**
[X] **DESIGNATOR OF SURETIES**
[X] **NON-COLLUSION AFFIDAVIT**
[X] **CERTIFICATION OF NON-DISCRIMINATION BY CONTRACTORS**
[X] **DEBARMENT AND SUSPENSION CERTIFICATION**
[X] **CERTIFICATION OF SITE EXAMINATION**
[X] **PARTY AND PARTICIPANT DISCLOSURE FORMS (IF APPLICABLE)**

POST- BID (CONTRACT) DOCUMENTS

Successful bidder shall submit the following:

[X] **INSURANCE REQUIREMENTS CERTIFICATE**
[X] **PREVAILING WAGE CERTIFICATION**
[X] **WORKERS COMPENSATION INSURANCE CERTIFICATION**
[X] **PERFORMANCE BOND**
[X] **PAYMENT (LABOR AND MATERIALS) BOND**
[X] **CONTRACTOR SERVICES AGREEMENT**

SUBMITTED BY:

Name of Company _____Contact Name_____

Address _____City_____State_____Zip_____

1. BID FORM

To: **The Orange County Fire Authority (OCFA)**

From: _____
(Legal Name of Bidder)

Project: *RO2155 – Audio/Visual Systems Upgrade at RFOTC*

The undersigned declares that the bid documents including, without limitation, the Invitation for Bids and the Instructions to Bidders have been read and agrees and proposes to furnish all necessary labor, materials, equipment and services to perform and furnish all work in accordance with the terms and conditions of the bid documents, including, without limitation, the Drawings and Specifications, and contract documents as provided in Bid RO2155 – Audio/Visual Systems Upgrade at RFOTC. The bidder will accept in full payment for that work the following total lump sum amount, all taxes and markup included: (transferred from the Bid Pricing Page)

Audio Visual Systems Upgrades at RFOTC	**Amount**
1) Upgrade of Audio/Visual Systems in Boardroom	$
2) Upgrade of Audio/Visual Systems in Breakout Room AE117	$
3) Upgrade of Audio/Visual Systems in Classrooms 153 and 154	$
4) Upgrade of Audio/Visual Systems in Classrooms D106, D107	$
Total Base Bid for Audio/Visual Systems Upgrades at RFOTC: (Must match Total Base Bid Amount provided below)	$

Bid Base Lump Sum

Amount _____

Written _____ **Dollars**

Contractor is required to provide itemized pricing in the schedule of values based on Construction Specifications Institute (CSI)'s Master Format. All costs are to be included in this form.

SCHEDULE OF VALUES (See Attachment B) – Please note that there are four (4) worksheets provided in Attachment B. All worksheets must be completed. Failure to complete all worksheets may result in your bid being marked as non-responsive.

DETAILED LABOR AND FEE BREAKDOWN (See Attachment C) - Please make sure that the Total Project Fee amounts and activities correspond to the correct activities as listed in the labor column of the Schedule of Values (Attachment B).

Total Base Bid for Audio/Visual Systems Upgrade (Must match Total Base Bid Amount provided on page 16)	**$**

PROPOSED SCHEDULE OF CONSTRUCTION

Task	Weeks
Upgrade of Audio Visual Systems in Boardroom	
Upgrade of Audio Visual Systems in Breakout Room AE117	
Upgrade of Audio Visual Systems in Classrooms 153 and 154	
Upgrade of Audio Visual Systems in Classrooms D106, D107	
Total weeks for completion	

1. The undersigned has reviewed the work outlined in the bid documents and fully understands the scope of work required in this bid, understands the construction and project management function(s) as described in the bid documents, and that each bidder who is awarded a contract shall be in fact the prime contractor, not a subcontractor, to the OCFA, and agrees that its bid, if accepted by the OCFA, will be the basis for the bidder to enter into a contract with the OCFA in accordance with the intent of the bid documents.

2. The undersigned had notified the OCFA in writing any discrepancies or omission or of any doubt, questions, or ambiguities about the meaning of any of the bid documents at least seventy-two (72) hours prior to bid opening, and has contacted the OCFA Assistant Purchasing Agent before bid date to verify the issuance of any clarifying addenda.

3. The undersigned agrees to commence work under this Contract on the date established in the bid documents and to complete all work within the time specified in the Bid Documents.

4. **By submitting this Bid Form and signing below, the liquidated damages clause of the Agreement is hereby acknowledged.**

5. It is understood that the OCFA reserves the right to reject this bid and that the bid shall remain open to acceptance and is irrevocable for a period of sixty (60) days.

6. Bidder acknowledges receipt and acceptance of the following addenda, if any:

   No. _____ Dated _____ No. _____ Dated _____

No. _____ Dated _____ No. _____ Dated _____

7. The undersigned hereby certifies that bidder is able to furnish labor that can work in harmony with all other elements of labor employed or to be employed on the work.

8. The bidder represents that it is competent, knowledgeable, and has special skills with respect to the nature, extent, and inherent conditions of the work to be performed. Bidder further acknowledges that there are certain peculiar and inherent conditions existent in the construction of the work that may create, during the work, unusual or peculiar unsafe conditions hazardous to persons and property.

9. Bidder expressly acknowledges that it is aware of such peculiar risks and that it has the skill and experience to foresee and to adopt protective measures to adequately and safely perform the work with respect to such hazards.

10. Bidder expressly acknowledges that it is aware that if a false claim is knowingly submitted (as the terms “claim” and “knowingly” are defined in the California False Claims Act, Cal. Gov. Code,§12650 et seq.), the OCFA will be entitled to civil remedies set forth in the California False Claim Act. It may also be considered fraud and the bidder may be subject to criminal prosecution.

11. The undersigned bidder certifies that it is, and shall be throughout the period of the contract, licensed by the State of California to do the type of work required under the terms of the Bid Documents. Bidder further certifies that it is regularly engaged in the general class and type of work called for in the Bid Documents.

12. Bidder agrees and acknowledges that it is aware of the provisions of Section 3700 of the California Labor Code which requires every employer to be insured against liability for workers’ compensation or to undertake self-insurance in accordance with the provisions of that code, and the bidder will comply with such provisions before commencing the performance of this contract.

Furthermore, Bidder hereby certifies to the OCFA that all representations, certifications, and statements made by the bidder, as set forth in this bid form, are true and correct and are made under penalty of perjury.

Dated this _____ day of _____20____

Legal Name of Bidder _____

Type of Entity (Corp., LLC) _____

Signature of Bidder _____

Title of Signer _____

If Bidder is a Corporation, affix corporate seal

Name of Corporation _____

Date of Incorporation _____

President _____ Secretary _____

Treasurer _____ Manager _____

1. BIDDER'S INFORMATION (REQUIRED)

Bidder's Name _____

Bidder's Business Address _____

Contact Name _____ E-Mail Address _____

Taxpayer ID Number _____

Telephone Number _____ Fax Number _____

California Contractors License Number and Class _____

Original Issue Date _____ Expiration Date _____

How many years has the Bidder been in business under the present name? _____

What other names has the Bidder operated under?

_____

If your company is owned by an individual or partnership, answer the following questions:

Date of Organization _____ Type _____
(i.e. general or limited partnership)

Name and address of all partners

_____

_____

_____

If other than a corporation or partnership, describe organization and name principals.

_____

_____

List other states in which Bidder is legally qualified to do business.

_____

_____

What type of work does the Bidder normally perform with its own forces?

_____

Has the Bidder ever failed to complete any work awarded? If so, note when, why and where.

_____

Have any of the current officers/partners of the Bidder's company ever been an officer/partner of another company that failed to complete a contract within the past five years? If so, please submit a separate page providing an explanation.

2. LIST OF PAST PROJECTS

The Bidder must demonstrate knowledge of public construction techniques and must possess a working ability to perform a similar scope of construction work for other public agencies. The following are the names addresses, phone numbers, and contact information for three projects for which the Bidder has performed as specified above within the past three (3) years. **Failure to provide the requested information may cause your bid to be rejected as non-responsive.**

Agency Name _____

Address _____

Contact Person _____

Telephone Number _____ E-mail _____

Scope of Work/Dollar Amount _____

Agency Name _____

Address _____

Contact Person _____

Telephone Number _____ E-mail _____

Scope of Work/Dollar Amount _____

Agency Name _____

Address _____

Contact Person _____

Telephone Number _____ E-mail _____

Scope of Work/Dollar Amount _____

Agency Name _____

Address _____

Contact Person _____

Telephone Number _____ E-mail _____

Scope of Work/Dollar Amount _____

3. LIST OF CURRENT PROJECTS

Provide a list of the current projects; duplicate this page if more space is needed.

Project	Description of Bidder's Work	Completion Date	Project Cost

4. CONTRACTOR'S LICENSING STATEMENT

The undersigned certifies that the Bidder is licensed in accordance with the laws of the State of California. The successful Bidder and subcontractors are required to hold the State of California Contractor's License(s) and DIR registration as required by SB854. Provide additional contractor's license details if applicable.

Contractor's License No. _____ Class _____ Expiration _____

Department of Industrial Relations (DIR) # _____

Name of Individual Contractor _____

Signature of Owner _____

Business Address _____

If the contractor operates under a partnership, provide the name of the firm, name, title and address below.

Name of Firm _____

Business Address _____

Name _____ Title _____

Address _____

Name _____ Title _____

Address _____

If the contractor operates under a corporation, provide the name and address below in addition to the a signatures of the President and Secretary.

Name of Corporation _____

Business Address _____

Corporation organized under the laws of the State of California

_____

Signature of the Corporation President

_____

Signature of the Corporation Secretary

_____

Date

5. LIST OF SUBCONTRACTORS

Bidder acknowledges and agrees that under Public Contract Code section 4100, et seq., it must clearly set forth below the name and location of each subcontractor who will perform work or labor or render service to the bidder in or about the construction of the work in an amount in excess of one-half of one percent (0.5%) of bidder's total bid and the kind of work that each will perform. Furthermore, bidder acknowledges and agrees that under Public Contract Code section 4100, et seq., if bidder fails to list any portion of work, or if bidder lists more than one subcontractor to perform the same portion of work (i.e. bidder must indicate what portion of the work each subcontractor will perform), bidder must perform that portion itself or be subjected to penalty under applicable law.

If alternate bids are called for and bidder intends to use subcontractors different from or in addition to those subcontractors listed for work under the base bid, bidder must list subcontractors that will perform work in an amount in excess of one half of one percent (0.5%) of bidder's total bid, including alternates.

In case more than one subcontractor is named for the same kind of work, the Contractor is to state the portion of work that each subcontractor will perform. Bidders or suppliers of materials only do not need to be listed. If further space is required for the list of proposed subcontractors, additional sheets showing the required information, as indicated below, shall be attached hereto and made a part of this document.

Listed below is the name of each subcontractor that will perform work, labor, or render services to the undersigned related to the construction work of this project. This is to include any subcontractor that will specially fabricate and install a portion of work according to detailed drawings contained in the plans and specifications in the amount greater than one half of one percent (.05%) of the contractors total bid.

Subcontractor Name _____ **Location** _____

Portion of Work/Trade _____

Bid Amount _____

Contractor's License Number **DIR Number** _____ _____

Subcontractor Name _____ **Location** _____

Portion of Work/Trade _____

Bid Amount _____

Contractor's License Number **DIR Number** _____ _____

Subcontractor Name _____ **Location** _____

Portion of Work/Trade _____

Bid Amount _____

Contractor's License Number **DIR Number** _____ _____

6. DESIGNATOR OF SURETIES

Provide the names, addresses and telephone numbers for all insurance brokers and sureties the Bidder intents to purchase insurance and bonds from.

Company Name _____

Address _____

Contact Name _____ E-Mail Address _____

Telephone Number _____ Fax Number _____

Bond or Insurance/Type _____

Company Name _____

Address _____

Contact Name _____ E-Mail Address _____

Telephone Number _____ Fax Number _____

Bond or Insurance/Type _____

Company Name _____

Address _____

Contact Name _____ E-Mail Address _____

Telephone Number _____ Fax Number _____

Bond or Insurance/Type _____

Company Name _____

Address _____

Contact Name _____ E-Mail Address _____

Telephone Number _____ Fax Number _____

Bond or Insurance/Type _____

7. NON-COLLUSION DECLARATION

The undersigned declares:

I am the _____ of _____
(Title) (Name of Contractor, Partnership, Corp.)

the party making the foregoing bid.

The bid is not made in the interest of, or on behalf of, any undisclosed person, partnership, company, association, organization, or corporation. The bid is genuine and not collusive or sham. The bidder has not directly or indirectly induced or solicited any other bidder to put in a false or sham bid. The bidder has not directly or indirectly colluded, conspired, connived, or agreed with any bidder or anyone else to put in a sham bid, or to refrain from bidding. The bidder has not in any manner, directly or indirectly, sought by agreement, communication, or conference with anyone to fix the bid price of the bidder or any other bidder, or to fix any overhead, profit, or cost element of the bid price, or of that of any other bidder. All statements contained in the bid are true. The bidder has not, directly or indirectly, submitted his or her bid price or any breakdown thereof, or the contents thereof, or divulged information or data relative thereto, to any corporation, partnership, company, association, organization, bid depository, or to any member or agent thereof, to effectuate a collusive or sham bid, and has not paid, and will not pay, any person or entity for such purpose.

Any person executing this declaration on behalf of a bidder that is a corporation, partnership, joint venture, limited liability company, limited liability partnership, or any other entity, hereby represents that he or she has full power to execute, and does execute, this declaration on behalf of the bidder.

I declare under penalty of perjury under the laws of the State of California that the foregoing is true and correct and that this declaration is executed on _____
(date)

in

_____
(city & state)

_____
(Signature)

_____
(Print Name)

_____
(Title)

8. CERTIFICATION OF NON-DISCRIMINATION BY CONTRACTORS

Labor Code Section 1735 requires that no discrimination be made in the employment of persons upon public works because of the race, religious creed, color, national origin, ancestry, physical handicap, medical condition, marital status or sex of such persons, except as provided in Government Code Section 12940.

The firm listed below certifies that it does not discriminate in its employment with regard to the factors set forth in Labor Code Section 1735; that it is in compliance with all federal, state and local directives and executive orders regarding non-discrimination in employment; and that it agrees to demonstrate positively and aggressively the principle of equal employment opportunity in employment.

We agree specifically:

1. To establish or observe employment policies which affirmatively promote opportunities for minority persons at all job levels.

2. To communicate this policy to all persons concerned, including all company employees, outside recruiting services, especially those serving minority communities, and to the minority communities at large.

3. To take affirmative steps to hire minority employees within the company.

Company Name _____

Signature _____

Printed Name/Title of Company Representative _____

Date _____

Please include any additional information available regarding equal opportunity employment programs now in effect within your company.

_____

_____

_____

_____

9. DEBARMENT AND SUSPENSION CERTIFICATION

TITLE 49, CODE OF FEDERAL REGULATIONS, PART 29

The Bidder, under penalty of perjury, certifies that, except as noted below, he/she or any other person associated therewith in the capacity of owner, partner, director, officer, manager:

- Is not currently under suspension, debarment, voluntary exclusion, or determination of ineligibility by any Federal agency;
- Has not been suspended, debarred, voluntarily excluded or determined ineligible by any Federal agency within the past 3 years;
- Does not have a proposed debarment pending; and
- Has not been indicted, convicted, or had a civil judgment rendered against it by a court of competent jurisdiction in any matter involving fraud or official misconduct within the past 3 years.

If there are any exceptions to this certification, insert the exceptions in the following space.

_____

_____

_____

_____

Exceptions will not necessarily result in denial of award, but will be considered in determining bidder responsibility. For any exception noted above, indicate below to whom it applies, initiating agency, and dates of action.

Note: Providing false information may result in criminal prosecution or administrative sanctions.

Company Name _____

Signature _____

Printed Name/Title of Company Representative _____

Date _____

10. CERTIFICATION OF SITE EXAMINATION

Each bidder shall be fully informed of the conditions relating to the construction of the work and the employment of labor thereon. Failure to do so will not relieve Contractor or subcontractor of the obligation to furnish all material and labor necessary to carry out the provisions of the contract documents.

Each bidder shall examine the site for the work described herein. Bidders shall attend a mandatory pre-bid inspection of the building(s) and site(s), conducted by the OCFA, unless otherwise specified. Failure to attend the mandatory pre-bid inspection shall be cause for rejection of the bid.

The specifications for the work show conditions as they are believed to exist. The conditions shown do not constitute a representation or warranty express or implied by the OCFA, its officers or agents that such conditions actually exist.

Each bidder also certifies it has observed the designated Contractor work areas, material equipment storage areas, access routes, as well as the ability to protect existing surface and subsurface improvements. No claim for allowance of time or money will be allowed for such matters.

This is to certify that I have examined the site and the bid is complete and there will be no additional payment for failure to examine the site thoroughly.

Date of Site Examination _____

Company Name _____

Signature _____

Printed Name/Title of Company Representative _____

Date _____

11. PARTY AND PARTICIPANT DISCLOSURE FORMS

The attached *Party Disclosure Form* must be completed and submitted by the bidder and subcontractors with the proposal by all firms subject to the campaign contribution disclosure requirements stated on page 5 of this solicitation.

The *Participant Disclosure Form* must be completed by lobbyists or agents representing the bidder in this procurement.

It is anticipated that a recommendation for award of this contract will be presented to the Board of Directors of the OCFA for approval. (Please see next page for definitions of these terms.)

IMPORTANT NOTICE:

Basic Provisions of Government Code Section 84308

A. If you are an applicant for, or the subject of, any contract award, you are prohibited from making a campaign contribution of more than $250 to any board member or his or her alternate. This prohibition begins on the date the solicitation is initiated, and the prohibition ends three months after a final decision is rendered by the Board of Directors. In addition, no board member or alternate may solicit or accept a campaign contribution of more than $250 from you during this period.

B. These prohibitions also apply to your agents and, if you are a closely held corporation, to your majority shareholder as well. These prohibitions also apply to your subcontractor(s), joint venturer(s), and partner(s) in this proceeding. Also included are parent companies and subsidiary companies directed and controlled by you, and political action committees directed and controlled by you.

C. You must file the attached disclosure form and disclose whether you or your agent(s) have in the aggregate contributed more than $250 to any board member or his or her alternate during the 12-month period preceding the contract award.

D. If you or your agent have in the aggregate contributed more than $250 to any individual board member or his/or her alternate during the 12 months preceding the decision on the contract award or proceeding, that board member or alternate must disqualify himself or herself from the decision. However, disqualification is not required if the board member or alternate returns the campaign contribution within 30 days from the time the director knows, or should have known, about both the contribution and the fact that you are a party in the proceeding. The Party Disclosure Form should be completed and filed with your proposal, or with the first written document you file or submit after the proceeding commences.

   A proceeding involving "a license, permit, or other entitlement for use" includes all business, professional, trade and land use licenses and permits, and all other entitlements[1] for use, including all entitlements for land use, all contracts[2] (other than competitively bid, labor or personal employment contracts), and all franchises.

E. Your "agent" is someone who represents you in connection with a proceeding involving a license, permit or other entitlement for use. If an individual acting as an agent is also acting in his or her capacity as an employee or member of a law, architectural, engineering, consulting firm, or similar business entity, both the business entity and the individual are "agents."

F. To determine whether a campaign contribution of more than $250 has been made by you, campaign contributions made by you within the preceding 12 months must be aggregated with those made by your agent within the preceding 12 months or the period of the agency, whichever is shorter. Contributions made by your majority shareholder (if a closely held corporation), your subcontractor(s), your joint venturer(s), and your partner(s) in this proceeding must also be included as part of the aggregation. Campaign contributions made to different directors or their alternates are not aggregated.

G. A list of the members and alternates of the Board of Directors is attached.

This notice summarizes the major requirements of Government Code Section 84308 of the Political Reform Act and 2 Cal. Adm. Code Sections 18438-18438.8 as it relates to contract awards. This notice shall not constitute legal advice, and may not be inclusive of all applicable laws and regulations.

[1] *Entitlement for the purposes of this form refers to contract award.*
[2] *All Contracts for the purposes of this form refer to the contract award of this specific solicitation.*

ORANGE COUNTY FIRE AUTHORITY
PARTY DISCLOSURE FORM

Party's Name: _____

Party's Address: _____

_____

Party's Telephone: _____

Solicitation Title and Number: _____

Based on the party disclosure information provided, are you or your firm subject to party disclosures?

No ☐ If no, check the box and sign below. Yes ☐ If yes, check the box, sign below and complete the form.

Date: _____ _____
Signature of Party and/or Agent

To be completed only if campaign contributions have been made in the preceding twelve (12) months. Attach additional copies if needed.

Board Member(s) or Alternate(s) to whom you and/or your agent made campaign contributions and dates of contribution(s) in the preceding 12 months:

Name of Member: _____

Name of Contributor (if other than Party): _____

Date(s): _____

Amount(s): _____

Name of Member: _____

Name of Contributor (if other than Party): _____

Date(s): _____

Amount(s): _____

Name of Member: _____

Name of Contributor (if other than Party): _____

Date(s): _____

Amount(s): _____

ORANGE COUNTY FIRE AUTHORITY
PARTICIPANT (AGENT) DISCLOSURE

The *Participant Disclosure Form* must be completed by lobbyists or agents representing the bidder in this procurement. (Please see next page for definitions of these terms.)

It is anticipated that a recommendation for award of this contract will be presented to the Board of Directors of the OCFA for approval.

IMPORTANT NOTICE:

Basic Provisions of Government Code Section 84308

A. If you are a participant in a proceeding involving any contract award, you are prohibited from making a campaign contribution of more than $250 to any board member or his or her alternate. This prohibition begins on the date you begin to actively support or oppose an application for contract award pending before the OCFA or any of its affiliated agencies, and continues until three months after a final decision is rendered on the application or proceeding by the Board of Directors.

No board member or alternate may solicit or accept a campaign contribution of more than $250 from you and/or your agency during this period if the board member or alternate knows or has reason to know that you are a participant.

B. The attached disclosure form must be filed if you or your agent has contributed more than $250 to any board member or alternate for the OCFA or any of its affiliated agencies during the 12-month period preceding the beginning of your active support or opposition (The disclosure form will assist the board members in complying with the law).

If you or your agent have made a contribution of more than $250 to any board member or alternate during the 12 months preceding the decision in the proceeding, that board member or alternate must disqualify himself or herself from the decision. However, disqualification is not required if the member or alternate returns the campaign contribution within 30 days from the time the director knows, or should have known, about both the contribution and the fact that you are a participant in the proceeding

The Participant Disclosure Form should be completed and filed with the proposal submitted by a party, or should be completed and filed the first time that you lobby in person, testify in person before, or otherwise directly act to influence the vote of the board members of the OCFA or any of its affiliated agencies.

1. An individual or entity is a "participant" in a proceeding involving an application for a license, permit or other entitlement for use if:

   a. The individual or entity is not an actual party to the proceeding, but does have a significant financial interest in the Authority's or one of its affiliated agencies' decisions in the proceeding.

AND

   b. The individual or entity, directly or through an agent, does any of the following:

      (1) Communicates directly, either in person or in writing, with a

board member or alternate of the OCFA or any of its affiliated agencies for the purpose of influencing the member's vote on the proposal;

(2) Communicates with an employee of the OCFA or any of its affiliated agencies for the purpose of influencing a member's vote on the proposal; or

(3) Testifies or makes an oral statement before the Board of Directors of the OCFA or any of its affiliated agencies.

2. A proceeding involving "a license, permit, or other entitlement for use" includes all business, professional, trade and land use licenses and permits, and all other entitlements for use, including all entitlements for land use; all contracts (other than competitively bid, labor, or personal employment contracts) and all franchises.

3. Your "agent" is someone who represents you in connection with a proceeding for this proposed involving a contract award. If an agent acting as an employee or member of a law, architectural, engineering, or consulting firm, or a similar business entity or corporation, both the business entity or corporation and the individual are agents.

4. To determine whether a campaign contribution of more than $250 has been made by a participant or his or her agent, contributions made by the participant within the preceding 12 months shall be aggregated with those made by the agent within the preceding 12 months or the period of the agency, whichever is shorter. Campaign contributions made to different members or alternates are not aggregated.

5. A list of the members and alternates of the Board of Directors is attached.

This notice summarizes the major requirements of Government Code Section 84308 and 2 Cal. Adm. Code Sections 18438-18438.8.

ORANGE COUNTY FIRE AUTHORITY
PARTICIPANT DISCLOSURE FORM

To be completed only if campaign contributions have been made in the preceding twelve (12) months. Attach additional copies if needed.

Prime's Firm Name: _____

Party's Name: _____

Party's Address: _____

_____

Party's Telephone: _____

Solicitation Title and Number: _____

Date: _____ _____

Signature of Party and/or Agent

Board Member(s) or Alternate(s) to whom you and/or your agent made campaign contributions and dates of contribution(s) in the preceding 12 months:

Name of Member: _____

Name of Contributor (if other than Party): _____

Date(s): _____

Amount(s): _____

Name of Member: _____

Name of Contributor (if other than Party): _____

Date(s): _____

Amount(s): _____

Name of Member: _____

Name of Contributor (if other than Party): _____

Date(s): _____

Amount(s): _____

ORANGE COUNTY FIRE AUTHORITY

Board of Directors

Gene Hernandez, Chairman
City of Yorba Linda

Phillip Tsunoda, Director
City of Aliso Viejo

Joseph Muller, Director
City of Dana Point

Michele Steggell, Director
City of La Palma

Dwight Robinson, Director
City of Lake Forest

Ed Sachs, Director
City of Mission Viejo

Carol Gamble, Director
City of Rancho Santa Margarita

Laurie Davies, Director
City of Laguna Niguel

David Sloan, Director
City of Seal Beach

Al Murray, Director
City of Tustin

John Perry
City of San Juan Capistrano

Todd Spitzer, Director
County of Orange

Tri Ta, Director
City of Westminster

Elizabeth Swift, Vice Chairman
City of Buena Park

Rob Johnson, Director
City of Cypress

Jeffrey Lalloway, Director
City of Irvine

Don Sedgwick, Director
City of Laguna Hills

Noel Hatch, Director
City of Laguna Woods

Shelley Hasselbrink, Director
City of Los Alamitos

Craig Green, Director
City of Placentia

Bob Baker, Director
City of San Clemente

Vicente Sarmiento, Director
City of Santa Ana

David John Shawver, Director
City of Stanton

Rick Barnett, Director
City of Villa Park

Lisa Bartlett, Director
County of Orange

BIDDER'S BOND
(10% of the Total Bid Amount)

KNOW ALL PERSONS BY THESE PRESENTS:

That the undersigned, as _____, as Principal ("Principal"),

and _____ as Surety ("Surety"),

a corporation organized and existing under and by virtue of the laws of the State of and authorized to do business as a surety in the State of California, are held and bound unto the Orange County Fire Authority ("Authority") of Orange County, State of California as Obligee, in the sum of

_____ Dollars ($) _____ lawful money of the United States of America, for the payment of which sum well and truly to be made, we, and each of us, bind ourselves, our heirs, executors, administrators, successors, and assigns, jointly and severally, firmly by these presents.

THE CONDITION OF THIS OBLIGATION IS SUCH that whereas the Principal has submitted a bid to the Authority for all work specifically described in the accompanying bid;

NOW, THEREFORE, if the Principal is awarded the Project and, within the time and manner required under the Bid Documents, after the prescribed forms are presented to Principal for signature, enters into a written contract ("Agreement"), in the prescribed form in accordance with the bid, and files two bonds, one guaranteeing faithful performance and the other guaranteeing payment for labor and materials as required by law, and meets all other conditions to the contract between the Principal and the Obligee becoming effective, or if the Principal shall fully reimburse and save harmless the Obligee from any damage sustained by the Obligee through failure of the Principal to enter into the Agreement and to file the required performance and labor and material bonds, and to meet all other conditions to the Agreement between the Principal and the Obligee becoming effective, then this obligation shall be null and void; otherwise, it shall be and remain in full force and effect. The full payment of the sum stated above shall be due immediately if Principal fails to execute the Agreement within seven (7) days of the date of the Authority's Notice of Award to Principal.

Surety, for value received, hereby stipulates and agrees that no change, extension of time, alteration or addition to the terms of the Agreement or the call for bids, or to the work to be performed thereunder, or the specifications accompanying the same, shall in any way affect its obligation under this bond, and it does hereby waive notice of any such change, extension of time, alteration or addition to the terms of the Agreement or the call for bids, or to the work, or to the specifications.

In the event suit is brought upon this bond by the Obligee and judgment is recovered, the Surety shall pay all costs incurred by the Obligee in such suit, including a reasonable attorneys' fee to be fixed by the Court.

If the Authority awards the bid, the security of unsuccessful bidder(s) shall be returned within sixty (60) days from the time the award is made. Unless otherwise required by law, no bidder may withdraw its bid for ninety (90) days after the date of the bid opening.

IN WITNESS WHEREOF, this instrument has been duly executed by the Principal and Surety above named, on the _____ day of _____ , 20___.

(Affix Corporate Seal)

_____
Principal

_____
By

_____
Print Name and Title of Signatory

(Affix Corporate Seal)

_____
Surety

_____
By

_____
Name of California Agent of Surety

_____
Address of California Agent of Surety

_____
Telephone Number of California Agent of Surety

Bidder must attach Power of Attorney and Certificate of Authority for Surety and a Notarial Acknowledgment for all Surety's signatures. The California Department of Insurance must authorize the Surety to be an admitted Surety Insurer.

SECTION V: POST BID DOCUMENTS

THE FOLLOWING SECTION CONTAINS DOCUMENTS TO BE RETURNED BY BIDDERS IF AWARDED A CONTRACT

PREVAILING WAGE CERTIFICATION

IFB RO2155 – Audio/Visual Systems Upgrade at RFOTC

I hereby certify that I will conform to the State of California Public Works Contract requirements regarding prevailing wages, benefits, on-site audits with 48-hour notice, payroll records, and apprentice and trainee employment requirements, for all Services on the above Project, including, without limitation, the State labor compliance monitoring and enforcement by the Compliance Monitoring Unit of the Department of Industrial Relations, if this Project is subject to a labor compliance.

Date _____

Legal Name of Contractor _____

Signature _____

Print Name _____

Title _____

WORKER'S COMPENSATION INSURANCE CERTIFICATION

IFB RO2155 – Audio/Visual Systems Upgrade at RFOTC

Labor Code section 3700 in relevant part provides:

Every employer except the State shall secure the payment of compensation in one or more of the following ways:

a. By being insured against liability to pay compensation to one or more insurers duly authorized to write compensation insurance in this state.
b. By securing from the Director of Industrial Relations, a certificate of consent to self-insure, which may be given upon furnishing proof satisfactory to the Director of Industrial Relations of ability to self-insure and to pay any compensation that may become due to his employees.

I am aware of the provisions of Section 3700 of the Labor Code which requires every employer to be insured against liability for workers' compensation or to undertake self-insurance in accordance with the provisions of that Code, and I will comply with such provisions before commencing the performance of work of this contract.

Date _____

Legal Name of Contractor _____

Signature _____

Print Name _____

Title _____

(In accordance with Article 5 - commencing at section 1860, chapter 1, part 7, division 2 of the Labor Code, the above certificate must be signed and filed with the awarding body prior to performing any work under this Contract.)

FAITHFUL PERFORMANCE BOND

(100% of Agreement Price)

(Note: Bidders must use this form, NOT a surety company form)

KNOW ALL PERSONS BY THESE PRESENTS:

WHEREAS, the governing board ("Board") of the Orange County Fire Authority, ("Authority") and _____ ("Principal)" have entered into a contract for the furnishing of all materials and labor, services and transportation, necessary, convenient, and proper to perform the following project:

IFB RO2155 – Audio/Visual Systems Upgrade at RFOTC

("Contract") which Contract dated [DATE], and all of the Bid Documents attached to or forming a part of the Contract, are hereby referred to and made a part hereof; and

WHEREAS, said Principal is required under the terms of the Contract to furnish a bond for the faithful performance of the Contract.

NOW, THEREFORE, the Principal and _____ ("Surety") are held and firmly bound unto the Board of the Authority in the penal sum of [WRITE OUT AMOUNT] DOLLARS ($[AMOUNT]), lawful money of the United States, for the payment of which sum well and truly to be made we bind ourselves, our heirs, executors, administrators, successors, and assigns jointly and severally, firmly by these presents, to:

- Perform all the work required to complete the Project; and
- Pay to the Authority all damages the Authority incurs as a result of the Principal's failure to perform all the work required to complete the Project.

The condition of the obligation is such that, if the above bounden Principal, his or its heirs, executors, administrators, successors, or assigns, shall in all things stand to and abide by, and well and truly keep and perform the covenants, conditions, and agreements in the Contract and any alteration thereof made as therein provided, on his or its part to be kept and performed at the time and in the intent and meaning, including all contractual guarantees and warrantees of materials and workmanship, and shall indemnify and save harmless the Authority, its trustees, officers and agents, as therein stipulated, then this obligation shall become null and void, otherwise it shall be and remain in full force and virtue.

As a condition precedent to the satisfactory completion of the Contract, the above obligation shall hold good for a period equal to the warranty and/or guarantee period of the Contract, during which time Surety's obligation shall continue if Contractor shall fail to make full, complete, and satisfactory repair and replacements and totally protect the Authority from loss or damage resulting from or caused by defective materials or faulty workmanship. The obligations of Surety hereunder shall continue so long as any obligation of Contractor remains. Nothing herein shall limit the Authority's rights or the Contractor or Surety's obligations under the Contract, law or equity, including, but not limited to, California Code of Civil Procedure section 337.15.

The Surety, for value received, hereby stipulates and agrees that no change, extension of time, alteration, or addition to the terms of the contract or to the work to be performed thereunder or the specifications accompanying the same shall in any way affect its obligation on this bond, and it does hereby waive notice of any such change, extension of time, alteration, or addition to the terms of the Contract or to the work or to the specifications.

IN WITNESS WHEREOF, two (2) identical counterparts of this instrument, each of which shall for all purposes be deemed an original thereof, have been duly executed by the Principal and Surety above named, on the _____ day of _____ , 20___.

(Affix Corporate Seal)

_____
Principal

_____
By

_____
Print Name and Title of Signatory

(Affix Corporate Seal)

_____
Surety

_____
By

_____
Name of California Agent of Surety

_____
Address of California Agent of Surety

_____
Telephone Number of California Agent of Surety

Bidder must attach Power of Attorney and Certificate of Authority for Surety and a Notarial Acknowledgment for all Surety's signatures. The California Department of Insurance must authorize the Surety to be an admitted Surety Insurer.

PAYMENT BOND

Contractor's Labor & Material Bond

(100% of Contract Price)

(Note: Bidders must use this form, NOT a surety company form)

KNOW ALL PERSONS BY THESE PRESENTS:

WHEREAS, the governing board ("Board") of the Orange County Fire Authority, ("Authority") and

_____, ("Principal)" have entered into a contract for the furnishing of all materials and labor, services and transportation, necessary, convenient, and proper to perform the following project:

IFB RO2155 – Audio/Visual Systems Upgrade at RFOTC

("Contract") which Contract dated [DATE], and all of the Bid Documents attached to or forming a part of the Contract, are hereby referred to and made a part hereof; and

WHEREAS, pursuant to law and the Contract, the Principal is required, before entering upon the performance of the work, to file a good and sufficient bond with the body by which the Contract is awarded in an amount equal to one hundred percent (100%) of the Contract price, to secure the claims to which reference is made in sections 9000 through 9510 and 9550 through 9566 of the Civil Code, and division 2, part 7, of the Labor Code.

NOW, THEREFORE, the Principal and _____ ("Surety") are held and firmly bound unto all laborers, material men, and other persons referred to in said statutes in the sum of [WRITE OUT AMOUNT] DOLLARS ($[AMOUNT]), lawful money of the United States, being a sum not less than the total amount payable by the terms of Contract, for the payment of which sum well and truly to be made, we bind ourselves, our heirs, executors, administrators, successors, or assigns, jointly and severally, by these presents.

The condition of this obligation is that if the Principal or any of his or its subcontractors, of the heirs, executors, administrators, successors, or assigns of any, all, or either of them shall fail to pay for any labor, materials, provisions, provender, or other supplies, used in, upon, for or about the performance of the work contracted to be done, or for any work or labor thereon of any kind, or for amounts required to be deducted, withheld, and paid over to the Employment Development Department from the wages of employees of the Principal or any of his or its subcontractors of any tier under Section 13020 of the Unemployment Insurance Code with respect to such work or labor, that the Surety will pay the same in an amount not exceeding the amount herein above set forth, and also in case suit is brought upon this bond, will pay a reasonable attorney's fee to be awarded and fixed by the Court, and to be taxed as costs and to be included in the judgment therein rendered.

It is hereby expressly stipulated and agreed that this bond shall inure to the benefit of any and all persons, companies, and corporations entitled to file claims under section 9100 of the Civil Code, so as to give a right of action to them or their assigns in any suit brought upon this bond.

Should the condition of this bond be fully performed, then this obligation shall become null and void; otherwise it shall be and remain in full force and affect.

And the Surety, for value received, hereby stipulates and agrees that no change, extension of time, alteration, or addition to the terms of Contract or the specifications accompanying the same shall in any

manner affect its obligations on this bond, and it does hereby waive notice of any such change, extension, alteration, or addition.

IN WITNESS WHEREOF, two (2) identical counterparts of this instrument, each of which shall for all purposes be deemed an original thereof, have been duly executed by the Principal and Surety above named, on the _____ day of _____ , 20___.

(Affix Corporate Seal)

_____
Principal

_____
By

_____
Print Name and Title of Signatory

(Affix Corporate Seal)

_____
Surety

_____
By

_____
Name of California Agent of Surety

_____
Address of California Agent of Surety

_____
Telephone Number of California Agent of Surety

Bidder must attach Power of Attorney and Certificate of Authority for Surety and a Notarial Acknowledgment for all Surety's signatures. The California Department of Insurance must authorize the Surety to be an admitted Surety Insurer.

ORANGE COUNTY FIRE AUTHORITY
GENERAL CONDITIONS

1.00 DEFINITIONS

As used herein the following terms have the meaning indicated:

Acts of God: An earthquake in excess of a magnitude of 3.5 on the Richter Scale and tidal waves.

Addendum: A a written or graphic instrument issued by Project Manager on behalf of the Authority prior to the execution of the Contract which sets forth additions, deletions, or other revisions to the Project Manual or clarifications thereof.

Architect: Mullen & Associates, Inc., and its officers, employees, and consultants, the architectural and engineering firm responsible for the overall design of the Project.

Authority: The Orange County Fire Authority, a legal entity and political subdivision of the State of California.

Board of Directors: The governing body of the Orange County Fire Authority.

Change Order: A written Modification executed by both parties (except in the event of a unilateral Change Order as herein provided) and consisting of additions, deletions or other changes to the Contract. A Change Order may be accompanied by and/or may identify additional or revised Drawings, sketches or other written instructions which become and form a part of the Project Manual by virtue of the executed Change Order. Except as otherwise provided in Subparagraph 1.1.5., a Change in the Work, or a change in the Contract Time or the Contract Sum shall become the subject of a Change Order

Construction Contract or Contract: The written agreement covering the performance of the Work and the furnishing of labor, materials, tools, and equipment in the construction of the Work. The term "Construction Contract" also includes the Project Manual with Appendix A (Demolition) of which the Construction Contract is a part.

Contract Directive: A written document issued by the Project Manager and consisting of additions, deletions, clarifications, interpretations, or other written instructions issued by the Project Manager with respect to the performance of the Work or the activities of the Contractor on the Job Site or the property of Authority. A Contract Directive can be a response to a Request for Information; however, all responses to Requests for Information need not be Contract Directives. A Contract Directive may become the subject of a Change Order only if such Directive involves a substantial change in the Work, or a change in the Contract Time or the Contract Amount, and approved as a Change Order by the Project Manager.

Contractor's Construction Schedule: The detailed schedules, based on a critical path method ("CPM"), prepared by the Contractor, presenting an orderly and realistic plan for completion of the work required in the Project Manual. The Contractor's Construction Schedule shall also include the completion dates of the Milestones and a final proposal narrative as described in the Project Manual.

Contractor: The person or entity awarded the Contract to perform the work.

Day: A calendar day unless otherwise specifically designated.

Excusable Labor Dispute: Any labor dispute directed against an entire industry, or any labor dispute that is not directed solely against the Project, the Contractor, or any subcontractor or supplier, and which prevents Contractor from obtaining labor or materials necessary for the performance of the Work and actually delays the performance of the Work; provided, however, that suitable substitute labor or materials are not reasonably obtainable.

Excusable Transportation Delay: Any labor dispute directed at an entire industry, or any labor dispute that is not directed solely against the Project, the Contractor, or any subcontractor or supplier, or other delay not within the reasonable control of the Contractor which prevents the transportation of necessary materials to

the Project and actually delays the performance of Work; provided, however, that suitable substitute transportation for such materials is not reasonably available.

Fire Chief: The Fire Chief of the Authority or the Fire Chief's Designee.

Laws: Each and every Federal, state, and local law, ordinance, code, rule, and regulation, as well as the lawful order or decree of any public or quasi-public authority and each of their respective inspectors or officials, including but not limited to all applicable building codes, bearing on or otherwise applicable to the Project. The term "Laws" also includes any and all conditions of approval of each and every entitlement or permit issued or approved by the Local Jurisdictions.

Local Jurisdictions: Any governmental agency with land use authority over the Project or part of the Project and each regulatory agency or authority with jurisdiction over the project, and their respective inspectors and representatives.

Authority: The term "Authority" wherever used in the Contract Documents shall be deemed synonymous with the term "Authority."

Modification or Contract Modification: (1) a written amendment to this Contract signed by both Parties; (2) an authorized Change Order; or (3) a Contract Directive or other written interpretation or order issued as a response to a Request for Information or otherwise issued by the Project Manager pursuant to the terms of the Project Manual. Contractor acknowledges that the execution on its behalf of any such Modification by any one person with apparent authority shall be binding against the Contractor. A Modification may be made only after execution of the Contract. No Contract Directive or response to a Request for Information shall be construed as a Change Order or other Modification unless it expressly so states.

Non-Conformance Notice: A a notice issued by the Project Manager documenting that the work or some portion thereof has not been performed in accordance with the requirements of the Project Manual.

Notice to Proceed: The written notice of the Authority to the Contractor to commence work under the Contract.

Plans: The drawings, supplemental drawings, or reproductions thereof, the project plans, standard plans, profiles, cross-sections, and all graphic depictions, which show the location, character, dimensions, and details of the work to be performed and contained in the Project Manual.

Project: The Project is the performance, construction, installation, and completion of the entire scope of all work as described in the Contract Documents.

Project Manager: The person or persons designated by the Fire Chief of the Authority to serve as the Project Manager of the project.

Project Manual: The Project Manual consists of the Construction Agreement, these General Conditions, the Scope of Services, the Drawings and Specifications, the Bidder's Bid, and all schedules, exhibits, attachments, and all modifications and amendments thereto. Project Manual also includes Contractor's Construction Schedule, Special Instructions to Bidders, if any, Contractor's Bid Proposal, all Addenda, if any, and Supplemental Agreements amending or extending the work contemplated and which may be required to complete the work in a substantial and acceptable manner.

Provide: To furnish, fabricate, complete, deliver, install, and erect including all labor, materials, equipment, apparatus, appurtenances, and expenses, necessary to complete in place, ready for operation or use under the terms of the Project Manual.

Related Work: Work performed by the Authority or by any separate Contractor retained or hired by the Authority, related to the completion of the Project and which is not required to be performed by the Contractor pursuant to this Contract and the Project Manual.

Requests for Information: A request from the Contractor or one of the Subcontractors to the Project Manager seeking an interpretation or a clarification of some requirement of the Project Manual. Contractor shall

clearly and concisely set forth the issue for which Contractor seeks clarification or interpretation and why a response is needed from the Project Manager. Contractor shall set forth Contractor's interpretation or understanding of the Project Manual's requirements along with reasons why Contractor reached such an understanding. Responses from the Project Manager will not change any requirements of the Project Manual unless so noted in the Request for Information response.

Scheduled Completion Date The 330th day after the Notice to Proceed or such other date as the Contractor and the Authority may mutually agree pursuant to the provisions of this Contract.

Site or Sites: The land on which the Project will be constructed as specifically described in the Project Manual.

Specifications: The directives, provisions, and requirements contained in Project Manual, however such may be labeled or otherwise described.

Subcontractor: A person or organization having a direct contract with the Contractor to perform any of the Work at the Site or to supply any materials, equipment, or supplies to be incorporated in, or utilized in connection with, the Work and as used herein shall include the Subcontractor's authorized representative.

Substantial Completion of the Project: (1) substantial completion of all as Work; (2) suitable to meet the requirements for the issuance of a certificate of occupancy and receipt of all other required approvals of construction from the Local Jurisdictions; (3) in strict accordance with the Project Manual; and (4) such that Authority may fully utilize the Project for the use for which it is intended.

Supplemental Agreements: The written agreements covering alterations, amendments, or extensions to the Construction Contract and include contract change orders.

Work: All the work specified, indicated, shown, or contemplated in the Construction Contract to construct the Project, including all alterations, amendments, or extensions thereto made by contract change order or other written orders of the Project Manager, including each activity, labor, task, service, acquisition, purchase, installation, or action of any kind required to be performed under the terms of this Contract and as specified in the Project Manual.

1.01 THE PROJECT MANUAL

A. The Contractor has examined carefully the site of the work contemplated, the plans and specifications, and the proposal and contract forms therefor. The submission of a bid shall be conclusive evidence that the Contractor has investigated and is satisfied as to the conditions to be encountered, as to the character, quality, and scope of work to be performed, the quantities of materials to be furnished and as to the requirements of the proposal, plans, specifications and the Construction Contract. The Contractor warrants and represents that, in executing the Contract and undertaking the Work, it has not relied upon any oral inducement or representation by Authority, Project Manager, or any of their officers or agents as to the nature of the Work, the Site, the Project conditions or otherwise.

B. All parts and provisions of the Project Manual are complementary, and what is required by any one shall be as binding as if required by all. If the Project Manual does not specifically allow the Contractor a choice as to quality or cost of items to be furnished, but could be interpreted to permit such choice, subject to confirmation or approval by Project Manager, they shall be construed to require the Contractor to provide the best quality. Words and abbreviations which have well-known technical or trade meanings are used in the Project Manual in accordance with such recognized meanings.

C. Where conflict exists within or between parts of the Project Manual, or between the Project Manual and either applicable industry standards or applicable codes, ordinances, or other legal requirements, the more stringent requirements shall apply; otherwise, the following order of precedence shall be used: the Construction Contract; the Special Conditions of the Contract for Construction; these General Conditions of the Construction Contract; the balance of the Project Manual, and; the Drawings. If the Contractor is required to perform any extra or corrective Work to comply with the preceding sentence, it shall not be entitled to an increase in the Contract Sum or

Contract Time, and no claim shall result from such compliance. Subject to confirmation or approval by Authority, large scale Drawings take precedence over smaller scaled Drawings, figured dimensions on the Drawings take precedence over scaled dimensions, and noted items on the Drawings take precedence over graphic representations. Contractor shall bring or submit to the Project Manager any such conflicts as soon as Contractor or its Subcontractors discover or learn about such apparent conflicts in the form of an RFI.

D. The organization of the Specifications into divisions, sections, and articles, and the arrangement of Drawings, are not intended to influence the Contractor in its division of the Work among Subcontractors or its establishment of the extent of the Work to be performed by any trade.

E. The Contractor shall request that Project Manager provide any interpretations or clarifications necessary for the proper execution, coordination or progress of the Work. Such interpretations shall be issued by Project Manager in writing for implementation by the Contractor. The Contractor shall make all such requests for interpretation or clarification in such occasional or regular joint coordination meetings as may be mutually determined to be required for such purposes.

F. The Project Manual reflect conditions as they are believed to exist, but it is not intended or to be inferred that the conditions as shown thereon constitute a representation by or on behalf of Authority that such conditions actually exist. The Contractor shall inspect the Site and conduct any tests or surveys it deems necessary or desirable prior to the commencement of the Work and shall accept full responsibility for any loss sustained by it as a result of any variances between the conditions as shown on the Project Manual and the actual conditions revealed during the progress of the Work or otherwise. The Contract Sum shall in no event be increased by reason of any such variance unless otherwise specifically provided herein.

G. The Contractor shall develop and maintain current "as-built" Plans to be provided to Project Manager in accordance with the Construction Contract and Section 01770 of the Project Manual. Project Manager may inspect and copy such Plans at any time during the course of the Work.

H. The intent of the plans and specifications is to prescribe the details for the construction and completion of the work which the Contractor undertakes to perform in accordance with the terms of the Construction Contract. Where the plans or specifications describe portions of the work in general terms, but not in complete detail, it is understood that only the best general practice is to prevail and that only materials and workmanship of the first quality are to be used. Unless otherwise specified, the Contractor shall provide all labor, materials, tools, equipment, and incidentals, and do all the work involved in executing the contract in a satisfactory and workmanlike manner.

1.02 AUTHORITY AND AUTHORITY'S REPRESENTATIVES

A. The work will be under the general direction of the Fire Chief. The Project Manager is the authorized representative of the Fire Chief and has complete charge of the work, and shall exercise full control of the work, so far as it affects the interest of the Authority.

B. The provisions in this General Conditions or elsewhere in the Contract Documents regarding approval or direction by the Fire Chief, the Authority, the Board of Directors, or the Project Manager, or action taken pursuant thereto, are not intended to and shall not relieve the Contractor of responsibility for the accomplishment of the work, either as regards sufficiency or the time of performance, except as expressly otherwise provided herein.

C. The Project Manager is the Authority's exclusive representative and agent to the Contractor with respect to this Project during construction and until the completion of the Project. The Authority's communications with the Contractor shall be exclusively through the Project Manager.

D. Project Manager shall at all times have access to the work whenever it is in preparation or progress. The Contractor shall provide safe facilities for such access.

E. The Authority shall not be responsible for or have control or charge of the construction means, methods, techniques, sequences or procedures, or for safety precautions and programs in

connection with the work, and will not be responsible for the Contractor's failure to carry out the work in accordance with the Contract Documents.

F. The Authority will not be responsible for the failure of the Contractor to plan, schedule, and execute the work in accordance with the approved schedule or the failure of the Contractor to meet the Contract Documents completion dates or the failure of the Contractor to Schedule and coordinate the work of Contractor's own trades and subcontractors or to coordinate with other Separate Contractors.

G. The Authority will not be responsible for the acts or omissions of the Contractor, or any subcontractor, or any Contractor's or subcontractor's agents or employees, or any other persons performing any of the work.

H. The Project Manager has the authority to disapprove or reject work on behalf of the Authority when, in the Project Manager's opinion, the work does rot conform to the Contract Documents. Whenever, in the Project Manager's reasonable opinion, it is considered necessary or advisable to ensure the proper implementation of the intent of the Contract Documents, the Project Manager has the authority to require special inspection or testing of any work in accordance with the provisions of the Contract Documents whether or not such work shall then be fabricated, installed, or completed.

I. The Project Manager has the authority to require special inspection or testing of the work. However, neither the Project Manager's authority nor any decision made by the Project Manager in good faith whether to exercise or not to exercise such authority shall give rise to any duty or responsibility of the Authority to the Contractor, or any subcontractor, or any of their agents, or employees, or any other person performing any portion of the work.

J. The Project Manager has the authority and discretion to call, schedule, and conduct job meetings to be attended by the Contractor and representatives of Contractor's subcontractors, to discuss such matters as procedures, progress, problems, and scheduling.

K. The Project Manager will establish procedures to be followed for processing all submittals, Change Orders, Progress payments, other project reports, documentation, and test reports.

L. The Project Manager will review all requests for changes and shall implement the processing of Change Orders including application for extensions of time.

M. The Project Manager will review and process all Progress Payment Requests by the Contractor including Final Progress Payment Requests.

N. Nothing contained in the Project Manual shall create any contractual relationship between Project Manager and the Contractor; provided, however, that Project Manager shall be deemed to be a third party beneficiary of those obligations of the Contractor to Authority as imposed by the Project Manual.

O. Except as otherwise provided in the Project Manual, and until the Contractor is notified in writing to the contrary, all actions to be taken by, all approvals, notices, consent, directions and instructions to be given by, all notices and other matters to be delivered to, all determinations and decisions to be made by and, in general, all other action to be taken by, or given to, Authority shall be taken, given and made by, or delivered or given to, Project Manager in the name of and on behalf of Authority. Only those so designated are authorized to grant on behalf of Authority any approval, consent or waiver with respect to the Project Manual or the Work, or to otherwise act for Authority in any capacity whatsoever.

P. The Contractor shall not be relieved of its obligations to perform the Work in accordance with the Project Manual either by the activities or duties of the Project Manager in its administration of the Contract, including, without limitation, by any inspections or tests required, or by approvals or other similar action with regard to shop drawings or submittals (of any type), or by the activities of persons other than the Contractor with respect to the Project. Further, notwithstanding the fact that a dispute, controversy or other question may have arisen between the parties hereto relating to the

execution or progress of the Work, the interpretation of the Project Manual, the payment of any monies, the delivery of any materials or any other matter whatsoever, the Contractor shall not be relieved of its obligations to pursue the Work diligently under the Project Manual pending the determination of such dispute, controversy, or other question.

Q. Authority reserves the right, but assumes no duty, to establish and enforce standards, and to change the same from time to time, for the protection of persons and property, with which the Contractor shall comply, and to review the efficiency of all protective measures taken by the Contractor. The exercise of or failure to exercise any or all of these acts by Authority shall not relieve the Contractor of its duties and responsibilities under the Project Manual, and Authority shall not thereby assume, nor be deemed to have assumed, such duties or responsibilities of the Contractor.

1.03 CONTRACTOR

A. Composition: If the Contractor hereunder is comprised of more than one legal entity, each such entity shall be jointly and severally liable hereunder.

B. Examination of Plans, Specifications, and Site of Project: In addition to the representations and warranties contained in the Contract, the Contractor acknowledges that prior to execution of the Contract it has thoroughly reviewed and inspected the Project Manual, and satisfied itself regarding any error, inconsistency, discrepancy, ambiguity, omission, insufficiency of detail or explanation. Authority shall not be responsible for any costs, nor liable to the Contractor for any damage, resulting from any such matter that the Contractor reasonably should have discovered. The Contractor shall perform no portion of the Work at any time which is not as provided or specified in the Project Manual or, where required, shop drawings, product data, or samples, for such portions bearing the Design Professional's appropriate action stamp. Work performed in violation of this provision shall be at the Contractor's risk

C. Contractor Certification: Contractor certifies and agrees that all the terms, conditions, and obligations of the Project Manual, the location and condition of the Site, and the conditions under which the work is to be performed have been thoroughly reviewed and investigated, and enters into this Contract based upon Contractor's review and investigation of all such matters. Contractor certifies and agrees that Contractor is in no way relying upon any opinions or representations of Authority or the Authority's officers, employees, agents, and consultants, including but not limited to, the Project Manager and the Architect.

D. Preparation of Documents: The Contractor shall carefully review and where appropriate or as may be required in the Scope of Work or at the direction of the Project Manager prepare drawings, specifications, and other instructions and shall at once report to Project Manager any error, inconsistency, or omission which Contractor may discover. Except as otherwise specifically provided hereinafter under warranties, the Contractor shall not be an agent for the Authority.

E. Superintendence: The Contractor shall maintain on the site, during all construction activity, a competent superintendent and any necessary assistants, all satisfactory to the Project Manager. The superintendent shall not be changed except with the consent of the Project Manager, unless the superintendent proves to be unsatisfactory to the Contractor and ceases to be in his employ, in which case he/she shall be replaced within 24 hours with a superintendent acceptable to the Project Manager. The superintendent shall represent the Contractor and all directions given to the superintendent shall be as binding as if given to the Contractor. The Contractor shall provide Project Manager with complete work history profiles of management staff associated with this Project for Project Manager's review.

F. Licenses and Certificates: The Contractor has all necessary licenses and permits required by the laws of the United States, State of California, County of Orange, and any local jurisdiction, and all other appropriate governmental agencies, and agrees to maintain these licenses and permits in effect for the duration of this Contract. Further, Contractor warrants that its employees, agents, and contractors and subcontractors shall conduct themselves in compliance with all applicable laws and

licensure requirements now in effect or as subsequently enacted or modified, as promulgated by any local, state, or federal governmental entities, including, without limitation, compliance with laws applicable to non-discrimination, sexual harassment, and ethical behavior. Contractor shall notify the Project Manager immediately and in writing of its inability to obtain or maintain, irrespective of the pendency of any appeal, any such permits, licenses, approvals, certificates, waivers, and exemptions. Such inability shall be cause for termination of this Contract.

G. Materials and Equipment: The Contractor shall cause all materials and equipment to be delivered to the Site in accordance with any schedule or schedules therefore established from time to time and approved by Project Manager and, in any event, in a manner which will assure the timely progress and completion of the Work but will not encumber the Site unreasonably. Materials delivered to the Site for incorporation in the Work shall not be removed from the Site without the consent of or unless directed by Project Manager. The Contractor shall give, or shall require its Subcontractors to give, full and accurate quality, performance and delivery status reports, in a form satisfactory to Project Manager, regarding any materials and equipment, or such other data with respect thereto as may be requested by Project Manager, and shall obtain for Project Manager the written assurances of any manufacturer that its material or equipment is designed, and appropriate, for the use intended. The Contractor warrants to Authority that all materials and equipment furnished under this Contract shall be new unless otherwise specified in the Project Manual and that all Work shall be of good quality, free from faults and defects and in conformance with the Project Manual. All Work not so conforming to these standards may be considered defective. All warranties and guarantees from Subcontractors (including, without limitation, manufacturers) shall be assignable to Authority regardless of whether it is so stated therein, and the Contractor agrees to assign all such warranties and guarantees to the Authority.

H. Completion Schedule: The Contractor shall prepare and submit, for Project Manager's approval, a Construction Schedule for the work which shall provide for expeditious and practicable execution of the work for completion within the Contract Time. This schedule shall be coordinated with the entire Project Construction Schedule to the extent required by the Contract Documents.

I. Reports by Contractor: Daily reports of the site and construction activities shall be provided to Project Manager. The reports shall follow the Authority approved format including, but not limited to, information regarding trades at work, manpower, weather conditions, construction progress, and solutions to problems.

J. Contractor Responsibility: The Contractor shall supervise and direct the Work, using its best skill and attention. The Contractor shall be solely responsible for all construction means, methods, techniques, sequences, coordination, scheduling and procedures, for all cleanup and for all safety and weather precautions and programs, in connection with the Work. Contractor shall be solely responsible for the work and the Project as described in the Contract Documents. Contractor shall have complete control over the construction methods, techniques, and procedures, except as may be specifically provided in the Contract Documents. Contractor shall, at its sole cost and expense, perform all labor and services and furnish all material, tools, appliances, and equipment necessary and proper for performing and completing the Work of the Project in strict compliance with the terms and conditions of the Project Manual. Contractor shall provide all labor, materials, and equipment in conformity with the Project Manual and other directions as may be provided by the Project Manager. Contractor shall, at its sole cost and expense, prepare and fully comply with all provisions of the Quality Assurance/Quality Control Program as provided in the Project Manual.

K Ongoing Oversight: Contractor shall keep itself continuously informed of the progress of the Work and the Related Work and will attend all meetings related to the Work and the Related Work as specified in the Project Manual and as identified in the Contractor's Construction Schedule. Contractor further agrees to work in a prompt, efficient, expert, and diligent manner and to furnish sufficient manpower to complete the Work in accordance with the Contractor's Construction Schedule. Contractor shall prosecute the Work diligently to completion. Contractor shall be responsible for the coordination and scheduling of all Work and the Related Work.

L. Ongoing Self-Inspection: Contractor shall, at its sole cost and expense, inspect its work to determine strict conformance to the requirements of the Project Manual. (This obligation of the Contractor is in addition to the Contractor's obligations to make repairs or to remedy deficient or unacceptable work as may be required under this Contract or any other provision of the Project Manual.) If the Contractor determines that some of the work performed on the Project does not comply with the requirements of the Project Manual, Contractor shall repair or replace such defective work at its sole cost and expense. Contractor shall gain no protection or right of reliance on the Project Manager's or Fire Chief's inspection of the work. If it is determined that the Project Manager or Fire Chief inspected work and failed to call defects or non-conforming items to the attention of Contractor, the Authority shall not be deemed to have waived the requirements of the Project Manual or accepted the work.

M. Monitoring and Compliance: The Project Manager and Architect shall, at all times, have safe access to the Project site and its related work during its construction, and shall be furnished with every reasonable facility for ascertaining that the materials and the workmanship are in accordance with the requirements and intentions of Contract Documents. All work done and all materials furnished shall be subject to Project Manager inspection. In the event the Project Manager finds or determines that the work or material are not in accordance with the requirements and the intentions of the Contract Documents, the Project Manager shall issues a Non-Conformance Notice. Upon receipt of a Non-Conformance Notice the Contractor shall provide a written Response to the Non-Conformance Notice within five (5) working days after receipt of the Notice. The Contractor's response shall detail either (a) why Contractor believes that the work was performed in accordance with the Project Manual or (b) what corrective action Contractor intends to take, at its sole cost and expense, to correct the non-conforming work. If Contractor disputes issuance of the Notice, the Project Manager has five- (5) working days in which to respond by either (a) withdrawing the Notice of Non-Conformance or (b) directing the Contractor to correct the work. Such determination of the Project Manager shall be final and conclusive of the matter. If directed to correct the work, Contractor shall do so within five (5) working days after receipt of such direction from the Project Manager, or such other time as may be agreed to with the Project Manager.

N. Inspectors: In addition to the Project Manager, inspectors of Local Jurisdictions are authorized to enforce strict compliance with the terms and conditions of the Contract and the Project Manual and to determine the acceptability of materials and workmanship. Inspectors are authorized to reject work or materials if they determine that such work or materials do not conform to the requirements of the Contract and the Project Manual. Whenever an inspector determines that some work installed by the Contractor, or any Subcontractor or supplier at any tier does not conform to the requirements of the Contract, a Notice of Non-Conformance will be issued to record this determination. In the event of a dispute between the Contractor and an inspector concerning non-conforming work, the Contractor shall pursue the issue in accordance with the requirements of Subsection M above this Section 1.03 of this contract, relating to Non-Conforming Work. Inspectors are not authorized to issue or direct changes to the requirements of the Contract. In the event that the Contractor believes some direction given by an inspector does constitute a change to the requirements of the Contract, Contractor shall within two (2) days provide written notice to the Project Manager detailing the direction given, by whom, when and under what circumstances, and why the Contractor believes that such direction constitutes a change to the requirements of the Contract. Failure to provide such written notice to the Project Manager within the specified timeframe shall constitute a waiver of claim with respect to the direction received by the Contractor.

O. Remedy and Repair of Work: The inspection of the work or materials shall not relieve the Contractor of any of the Contractor's obligations to fulfill the Construction Contract as prescribed. Work and materials not meeting the requirements shall be made good, and unsuitable work or materials may be rejected, notwithstanding that the work or materials have been previously inspected by the Project Manager or that payment therefor has been included in a progress payment. All work which has been rejected as indicated in a Non-Conformance Notice shall be remedied, or removed and replaced by the Contractor in an acceptable manner, and no compensation will be allowed to the Contractor for the removal, replacement or remedial work. Payment shall not be made on any portion of the work for which a Non-Conformance Notice has been issued and the work not corrected to the satisfaction of the Project Manager.

P. Failure to Comply: Upon failure of the Contractor to comply promptly with any order of the Project Manager made under Paragraphs L, M, N, and O above, the Project Manager, with the approval of the Fire Chief, may cause rejected or unauthorized work to be remedied, removed, or replaced, and to deduct the costs from any moneys due or to become due the Contractor.

Q. Contactor Liabilities: The Contractor shall be responsible to Authority for the acts and omissions of its employees. The Contractor shall be held responsible for all damages resulting from its employees or its subcontractors or agents from all errors, omissions, or negligence in the performance of the work and completion of the Project.

R. Deficiencies in Contract Documents: Contractor covenants and agrees that Contractor, its employees, agents, subcontractors, and suppliers have an affirmative duty and obligation to promptly disclose to the Project Manager any deficiency, error, or inconsistency in the Contract Documents and any of the plans and specifications contained therein, so that Project Manager, the Authority, and the Architect can affect any required or necessary modification thereof in a timely and cost effective manner. In this regard and in furtherance of the Contractor's obligations, the Contractor agrees not to take advantage of errors or omissions in the Project Manual. It is the duty of the Contractor to promptly notify the Project Manager in writing of any design, materials, or specified method that the Contractor believes may prove defective or insufficient. If the Contractor believes that a defect or insufficiency exists in design, materials, or specified methods and fails to promptly notify the Project Manager in writing of this belief, the Contractor thereby waives any right to assert that defect or insufficiency in design, materials, or specified method at any later date in any legal or equitable proceeding against the Authority, or in any subsequent arbitration or settlement conference between the Authority and the Contractor. The Project Manager, on receipt of any such notice, will promptly investigate the circumstances and give appropriate instructions to the Contractor. Until such instructions are given, any work done by the Contractor after the Contractor becomes aware that a defect or insufficiency exists in design, materials, or specified method which is directly or indirectly affected by such alleged defect or insufficiency in design, materials, or specified method will be at the Contractor's own risk and the Contractor shall bear all costs arising therefrom.

S. Ongoing Duty to Disclose: If the Contractor, either before commencing work or in the course of the work, finds any discrepancy within the Project Manual, or between the Project Manual and the physical conditions at the Site, or finds an error or omission on the Plans, Specifications, or in any survey, the Contractor shall promptly notify the Project Manager in writing of such discrepancy, error, or omission. If the Contractor observes that the Project Manual is at variance with any applicable law, regulation, order, or decree, the Contractor shall promptly notify the Project Manager in writing of such conflict. The Project Manager, on receipt of such notice, will promptly investigate the circumstances and give appropriate instructions to the Contractor. Until such instructions are given, work done by the Contractor after the discovery of such error, discrepancy, or conflict which is directly or indirectly affected by such error, discrepancy, omission, or conflict will be at the Contractor's own risk and the Contractor shall bear all costs arising therefrom.

T. Duty to Coordinate: The Contractor shall be responsible for coordinating any work carried on at the Site by other parties or by the Authority, including the Related Work, simultaneously with the Work. The compensation to be paid to Contractor under this Contract includes any costs which the Contractor may incur as a result of coordinating the Work with such other work, including the Related Work. In no case shall the Contractor be entitled to extra compensation from the Authority for damages suffered as a result of work being carried on at the Site by other parties or the Authority simultaneously with the construction work for this Project. Nevertheless, if such work results in a delay to the Contractor's work beyond reasonable time allocations afforded to such work and Related Work identified on the Contractor's Construction Schedule as approved by the Project Manager, the Contractor may be eligible for an extension of time as specified under Article 6 of this Contract.

U. Failure to Pay for Labor or Materials: If Contractor fails to pay for labor or materials when due, Authority may settle such claims by making demand upon the surety to this Agreement. In the event of the failure or refusal of the surety to satisfy said claims, Authority may settle any claims directly and deduct the amount of payments from the Contract price and any amounts due to Contractor. In the event Authority receives a stop notice from any laborer or material supplier alleging non-

payment by Contractor, Authority shall be entitled to deduct all of its costs and expenses incurred relating thereto, including but not limited to administrative and legal fees.

V. Compliance with Laws: The Contractor shall, at its cost and expense, comply with all Laws, as any may now exist or be hereafter changed or added. It shall be the responsibility of the Contractor to familiarize itself with all such Laws, and any performance of the Work by or on behalf of the Contractor which is not in compliance with the Laws shall be at the Contractor's sole risk and expense. The Contractor shall notify Authority prior to execution of the Contract (and, without limiting the continuous duty of the Contractor to advise the Authority) of any instances where the Contract Documents are, or where the Contractor believes the Contract Documents are, not in compliance with the Laws.

W. Ongoing Responsibility: Any work or material not specified in the Project Manual but which by fair implication, in the judgment of the Project Manager, should be included therein, shall be accomplished, furnished, or provided by the Contractor as part of the Project Manual.

X. Taxes, Fees, and Licenses: The Contractor shall pay, or cause to be paid, all import duties and sales, consumer, use, excise, value added and ad valorem taxes required to be paid in connection with the Work or upon materials, tools or equipment brought to the Site or used in the Work. If any of the foregoing taxes are not paid in a timely manner, Authority may withhold the amount of any such taxes from any amounts owing to the Contractor under the Project Manual, submit the amount so withheld to the appropriate taxing authority on behalf of the Contractor or its Subcontractors or Sub-subcontractors and offset said amount against the Contract Sum. The Contractor shall secure and pay for all governmental fees, permits and licenses which Authority is not specifically required to provide and pay for under the Project Manual.

Y. Tests: If the Project Manual, or any laws, ordinances, rules, regulations, or any orders or decrees of any public or quasi-public authority having jurisdiction, or common practice in the industry, require or dictate that the Contractor have any portion of the Work inspected, tested or approved, the Contractor shall advise Project Manager in a timely manner (in writing, if practicable) of its readiness and of the date arranged so that Project Manager may observe such inspection, testing or approval. The Contractor shall bear all costs of such inspections, tests and approvals except as otherwise specified. Project Manager may require any special inspection, testing or approval of the Work not included under above, or any more stringent inspection, testing or approval thereof, in which event it shall instruct the Contractor to order such inspection, testing or approval, and the Contractor shall advise Project Manager in a timely manner (in writing, if practicable). If such inspection or testing reveals any failure of the Work or the performance thereof to comply with the more stringent of: (a) the requirements of the Project Manual; (b) applicable industry standards; or (c) applicable laws, ordinances, codes, rules, regulations or orders or decrees of any public or quasi-public authority having jurisdiction, or reveals any defect in the Work, the Contractor shall bear the costs of such inspection or testing and all costs to correct the Work to the satisfaction of Project Manager, which, if incurred by Authority, may be offset by Authority against any amounts then or thereafter due to the Contractor. If such inspection or testing proves that the Work was performed properly, Authority shall bear the costs of such inspection or testing. Required certificates of inspection, testing or approval shall be secured by the Contractor and promptly delivered by it to the Project Manager.

Z. General: The duties and responsibilities of the Contractor as set forth in this Section 1.03 are in addition to, and not in lieu of, other duties and responsibilities of the Contractor enumerated elsewhere in the Project Manual.

1.04 SUBCONTRACTS

A. Licensed Subcontractors: The Contractor shall comply with the provisions of the Subletting and Subcontracting Fair Practices Act (the “Act”) (Public Contracts Code Section 4100 *et seq.*). The Contractor shall not terminate the employment of a Subcontractor or Sub-subcontractor engaged in the Work prior to the expiration of that subcontract without complying with the Act. The Contractor shall in all respects select the subcontractors in the manner provided under law. Each subcontractor selected for the work shall be licensed in the State of California in the subcontractor’s particular field.

B. Transactions: Transactions with subcontractors shall be made through the Contractor. Authority may assign to the Contractor any contracts or purchase orders entered into between Authority and any other person or organization in any way related to the Project or the Work, at any time, in which event the Contractor shall assume full responsibility for such person or organization and its portion of the Work as if such person or organization was originally a Subcontractor. Such assignment may occur by Change Order or other Modification to the Contract, and any increase in the Contract Sum shall be governed by Section 01200 of the Project Manual.

C. Writing: All subcontracts and sub-subcontracts shall be in writing. Each subcontract and sub-subcontract shall contain a reference to this Contract and shall incorporate the terms and conditions hereof to the full extent applicable to the portion of the Work covered thereby. Each Subcontractor must agree, for the benefit of Authority, to be bound by, and to require each of its Sub-subcontractors to be bound by, such terms and conditions to the full extent applicable to its portion of the Work.

D. Responsibility: The Contractor shall be fully responsible to the Authority for the acts and omissions of subcontractors and all persons directly or indirectly employed by them as Contractor is for the acts and omissions of Contractor and of persons - directly or indirectly employed by Contractor and shall pay each subcontractor promptly the amount allowed Contractor on account of such subcontractor's work to the extent of such subcontractor's interest therein.

E. Incompetent or Disorderly Conduct: If any Subcontractor or person employed by the Contractor shall appear to the Project Manager to be incompetent or to act in a disorderly or improper manner, such person shall be discharged immediately on the request of the Project Manager, and that person shall not again be employed on the work.

F. Mandatory Subcontract Terms: Each subcontract shall provide for its termination by the Contractor if, in Project Manager's opinion, the Subcontractor fails to comply with the requirements of the Project Manual insofar as the same may be applicable to its portion of the Work; and each Subcontractor shall be required to insert a similar provision in each of its sub-subcontracts. In the event of any such failure by a Subcontractor or Sub-subcontractor to comply with the requirements of the Project Manual, such Subcontractor or Sub-subcontractor, as the case may be, shall be removed immediately from the Work and shall not again be employed on the Work. The Contractor shall be responsible for all costs and expenses arising out of, and shall indemnify Authority on account of any such failure by a Subcontractor or Sub-subcontractor (specifically including, without limitation, a failure to pay for labor (including applicable fringe benefits) or materials).

G. Contractual Relations: Nothing contained in this Contract shall create any contractual relations between Authority or the Project Manager or the Architect and a subcontractor. However, it is acknowledged that Authority and Project Manager are intended third party beneficiaries of the obligations of the Subcontractors and Sub-subcontractors related to the Work and the Project.

1.05 DRAWINGS AND SPECIFICATIONS

A. Checking: The Contractor, as part of this Contract, shall agree not to take advantage of errors or omissions in the Contract Documents, including any plans and specifications thereto. It is the duty of the Contractor to promptly notify the Project Manager in writing of any design, materials, or specified method that the Contractor believes may prove defective or insufficient. If the Contractor believes that a defect or insufficiency exists in design, materials, or specified methods and fails to promptly notify the Project Manager in writing of this belief, the Contractor thereby waives any right to asset that defect or insufficiency in design, materials, or specified method at any later date in any legal or equitable proceeding against the Authority, or in any subsequent arbitration or settlement conference between the Authority and the Contractor. The Project Manager, on receipt of any such notice, will promptly investigate the circumstances and give appropriate instructions to the Contractor. Until such instructions are given, any work done by the Contractor after the Contractor becomes aware that a defect or insufficiency exists in design, materials, or specified method which is directly or indirectly affected by such alleged defect or insufficiency in design, materials, or specified method will be at the Contractor's own risk and the Contractor shall bear all costs arising therefrom.

B. Discrepency in Contract Documents: If the Contractor, either before commencing work or in the course of the work, finds any discrepancy within the Contract Documents, or between the Contract Documents and the physical conditions at the Project site, or finds an error or omission on the plans, specifications, or in any survey, the Contractor shall promptly notify the Project Manager in writing of such discrepancy, error, or omission. If the Contractor observes that the Contract Documents is at variance with any applicable law, regulation, order, or decree, the Contractor shall promptly notify the Project Manager in writing of such conflict. The Project Manager , on receipt of such notice, will promptly investigate the circumstances and give appropriate instructions to the Contractor. Until such instructions are given, work done by the Contractor after the discovery of such error, discrepancy, or conflict which is directly or indirectly affected by such error, discrepancy, omission, or conflict will be at the Contractor's own risk and the Contractor shall bear all costs arising therefrom.

C. Implication: Any work or material not specified in the Contract Documents but which by fair implication, in the judgment of the Project Manager, should be included therein, shall be accomplished, furnished, or provided by the Contractor as part of the Contract Documents.

D. Precedence: Figures marked on drawings shall in general be followed in reference to scale measurements. Large scale drawings shall in general govern small scale drawings. Specifications and schedules shall govern over drawings. The Contractor shall compare all drawings and verify the figures before laying out the work and will be responsible for any errors. When measurements are affected by conditions already established, the Contractor shall take measurements notwithstanding the giving of scale or figure dimensions in the drawings. Anything mentioned in the specifications and not shown on the drawings, or shown on the drawings and not mentioned in the specifications, shall be of like effect as if shown or mentioned in both. In case of discrepancy in the Plans or Specifications, the matter shall be immediately submitted to the Project Manager, without whose decision Contractor shall not adjust said discrepancy save only at Contractor's own risk and expense. The decision of the Project Manager shall be final.

E. Shop Drawings: The Contractor shall establish, implement, and supervise the submission of shop drawings and other submittals (of any type) in accordance with the Schedule and any Milestones. The Contractor shall note any variances between any such shop drawings or other submittals and the Project Manual for the benefit of Authority at the time of submission. No approval or other similar action regarding any such submission shall be binding in any way upon Authority.

E. Drawings and Specifications at the Site: The Contractor shall keep available at the site for ready reference a complete set of all contract drawings, details, supplementary drawings and approved shop drawings, a complete copy of the specifications with all addenda, bulletins, amendments, and copies of Project correspondence. The Contractor shall maintain on the site a complete "as built" record set of prints. In addition, the Contractor shall keep on the site as required a copy of each manufacturer's current printed recommendations. Contractor shall also submit a copy to the Project Manager.

F. Deviations: Deviations from the drawings and the dimensions therein given, whether or not error is believed to exist, shall be made only after written authority is obtained from the Project Manager.

1.06 DIVISIONS OF THE SPECIFICATIONS

A. For convenience, the work as described in the Contract Documents are arranged in several divisions and sections, but such separations shall not be considered as the limits of the work required for any subcontract or trade: the terms and conditions of such limitations are wholly between the Contractor and his subcontractors, and the Authority will not be responsible for any division of work by subcontractors. The Contractor will be solely responsible for all subcontract arrangements of work regardless of the location of provisions in the specifications.

B. Schedules of work included in the sections, where listed, are given for convenience only, and shall not be considered as a comprehensive list of items or work necessary to complete the work of any section.

C. Where devices or items or parts thereof are referred to in the singular, it is intended that such reference shall apply to as many soon devices, items, or parts as are required to properly complete the work.

D. Each section of the specifications is covered by applicable requirements of the Contract Documents and other related sections as if therein written.

1.07 SITE CONDITIONS

A. Existing Site Conditions: Information respecting the site of the work given in drawings or specifications has been obtained by Authority's representatives and is believed to be reasonably correct, but the Authority does not warrant either the completeness or accuracy of such information, and it is the responsibility of the Contractor to verify all such information.

B. Changed Conditions: The Contractor shall promptly, and before such conditions are disturbed, notify the Project Manager in writing of:

(1) Subsurface or latent physical conditions at the site differing materially from those indicated in the Contract Documents; or

(2) Unknown physical conditions at the site, of an unusual nature, differing materially from those ordinarily encountered and generally recognized as inherent in work of the character provided for in the Contract Documents. The Project Manager shall promptly investigate the conditions, and if, as a result, finds that such conditions do so materially differ and cause an increase or decrease in the Contractor's cost of, or the time required for performance an equitable adjustment shall be made and the Contract Documents modified in writing accordingly. Any claim of the Contractor for adjustment hereunder shall not be allowed unless Contractor has given notice as above required.

C. Public Utility Facilities on Project Site: Pursuant to Government Code, Section 4215, the Contractor shall be compensated for the costs of locating and repairing damage to public utility facilities on the Project site which was not due to failure of Contractor to exercise reasonable care, and removing or relocating main or trunk line utility facilities located on the Project site, if such work is required in the Contract Documents or the Project Manager. Such compensation shall also cover the cost of Contractor's equipment necessarily idled during such work. This provision shall not be deemed to require compensation when the presence of existing service laterals or appurtenances can be inferred from the presence of visible facilities such as buildings, meter and junction boxes, on or adjacent to the construction site. If the Contractor discovers such unidentified utility facilities during construction, Contractor shall immediately notify the Project Manager and the utility in writing.

D. Space at Site: The Contractor shall be allowed reasonable space at the site of the work as available and access thereto and shall confine Contractor operations to the space assigned. The work shall be done without interference with the ordinary use of the fire station. The Contractor shall cooperate with other Contractors of the Authority and shall not commit or permit any act which will interfere with the performance of work by any other Contractor or employees of the Authority whether at the site or not.

1.08 CONDITIONS AFFECTING THE WORK

A. The Contractor shall be responsible for having taken steps reasonably necessary to ascertain the nature and location of the work, and the general and local conditions which can affect the work or the cost thereof. Any failure by the Contractor to do so will not relieve Contractor from responsibility for successfully performing the work without additional expense to the Authority. The Authority assumes no responsibility for any understanding or representations concerning conditions made by any of its officers or agents prior to the execution of the Contract Documents, unless such understanding or representations by the Authority are expressly stated in the Contract Documents.

1.09 AUTHORITY'S PROPERTY ON SITE

A. All fixtures, facilities, equipment, vehicles, furniture, and all other personal property of the Authority located at the job site which are removed in the course of construction of the Project remain the property of the Authority unless express provision to the contrary is made in the Contract Documents, and the Contractor shall exercise reasonable care to prevent loss or damage to said property and shall deliver promptly such property to the place designated by the Project Manager.

1.10 PROTECTION

A. The The Contractor shall, throughout the performance of the Work, maintain adequate and continuous protection of all Work, all material and supplies, and temporary facilities against loss or damage from whatever cause, shall protect the property of Authority and third parties from loss or damage from whatever cause, and shall comply with the requirements of Authority and its insurers and with all applicable laws, codes, rules and regulations with respect to the prevention of loss or damage to property as a result of fire or other hazards.

B. The Project Manager may, but shall not be required to, make periodic patrols of the Site as a part of its normal security and safety program. In such event, however, the Contractor shall not be relieved of its aforesaid responsibilities and Authority shall not assume same, nor shall it be deemed to have assumed, any responsibility otherwise imposed upon the Contractor by the Contract.

C. Until final acceptance of the Work by Authority, the Contractor shall have full and complete charge and care of and, except as otherwise provided in this Subparagraph, shall bear all risk of loss of, and injury or damage to, the Work or any portion thereof (specifically including Authority-furnished supplies, equipment or other items to be utilized in connection with, or incorporated in, the Work), materials, equipment, and supplies, from any cause whatsoever, subject to the limitations set forth below.

D. The Contractor shall rebuild, repair, restore, replace, and make good all losses of, and injuries or damages to, the Work or any portion thereof (specifically including Authority-supplied, equipment or other items to be utilized in connection with, or incorporated in, the Work), material, equipment, and supplies before final acceptance of the Work. Such rebuilding, repair, replacement, or restoration shall be at the Contractor's sole cost and expense.

E. Contractor shall take proper safety and health precautions to protect the work, the workers, the public, and the property of others. Contractor shall comply with the provisions of the Construction Safety Orders issued by the State Division of Occupational Safety & Health. Contractor shall also be responsible for all materials delivered and work performed until completion and acceptance of the entire construction work, except for any completed unit of construction thereof which theretofore may have been accepted.

F. The Contractor shall maintain continuously adequate protection of all work from damage and shall protect the Authority's property from injury or loss arising in connection with the Contract Documents. Contractor shall make good any such damage, injury, or loss, except such as may be directly due to errors in the Contract Documents or caused by agents or representatives of the Authority. Contractor shall adequately protect adjacent property as provided by law and the Contract Documents, and shall maintain reasonable security of the site at all times, if necessary. Contractor shall limit visitors to the site to those necessary for construction and inspections. Visitors for other purposes shall be referred to the Project Manager Contractor's and subcontractors' employees shall possess mans of identification at all times as required by the Project Manager while on the job site.

G. In an emergency affecting the safety of life or of the work or of adjoining property the Contractor, without special instruction or authorization from the Authority, is hereby permitted to act at Contractor's discretion to prevent such threatened loss or injury. Contractor shall so act if directed or instructed by the Project Manager. Any dispute as to compensation claimed by the Contractor on account of emergency work shall be determined by agreement as hereinafter set forth.

H. The Project Manager may notify the Contractor of any noncompliance with the foregoing provisions and the action to be taken. The Contractor shall, after receipt of such notice, immediately correct such conditions. Such notices, when delivered to the Contractor or Contractor's representative at the site of the work, shall be deemed sufficient for said purpose. Failure of receipt of such notice from the Project Manager shall not relieve the Contractor of responsibility.

I. If the Contractor fails or refuses to comply promptly, the Project Manager my issue an order stopping all or part of the work until satisfactory corrective action has been taken. No part of the time lost due to any such stop order shall be made the subject of claim for extension of time or for excess costs or damages to the Contractor. The Contractor will be responsible for ensuring that his subcontractors comply with the provisions of this Article.

J. Surface or Subsurface water or other fluid shall not be permitted to accumulate in excavations or under the structures. Should such conditions develop or be encountered, the water or other fluid shall be controlled and suitably disposed of by means of temporary pumps, piping, drainage lines and ditches, dams or other methods approved in writing by Authority. The proposed location and coordination of temporary channels and conduits conducting accumulated water from the Site shall be submitted to Project Manager for its prior written approval. All such work shall be done at the sole expense of the Contractor, and in accordance with the Federal National Pollutant Discharge Elimination System (NPDES) and the NPDES General Construction Permit which includes the Contractor's Storm Water Pollution Prevention Plan (SWPPP) pursuant thereto.

1.11 RESPONSIBILITY FOR DAMAGES OR INJURY

A. The Authority and all officers and employees thereof shall not be answerable or accountable in any manner: for any loss or damage that may happen to the work or any part thereof; for any loss or damage to any of the materials or other things used or employed in performing the work; for injury to or death of any person either workers or the public; or for damage to property from any cause which might have been prevented by the Contractor, or Contractor's workers, or anyone employed by Contractor.

B. The Contractor shall be responsible for any liability imposed by law and for injuries to or death of any person or damage to property resulting from defects or obstructions or from any cause whatsoever during the progress of the work or at any time before its completion and final acceptance.

C. The Contractor shall indemnify and save harmless the Authority and all officers and employees thereof connected with the work:

(1) from all claims, suits or actions of every name kind and description, brought for, or on account of, injuries to or death of any person or damage to property resulting from the construction of the work or by or in consequence of any negligence in guarding the work;

(2) use of improper materials in construction of the work;

(3) or by or on account of any act or mission by the Contractor or Contractor's agents during the progress of the work or at any time before its completion and final acceptance.

D. In addition to any remedy authorized by law, so much of the money due the Contractor under and by virtue of the Contract Documents as shall be considered necessary by the Authority may be retained by it until disposition has been made of such suits or claims for damages as aforesaid.

1.12 PAYMENTS

A. The Authority shall make payments upon the contract price in accordance with the Contract Documents.

1.13 ASSIGNMENT

A. The Contract Documents, and any portion thereof, may not be assigned by the Contractor. Claims for monies due or to become due the Contractor from the Authority under the Contract Documents may be assigned, with the written consent of the Board of Directors, to a bank, trust company, or other financing institution and may thereafter be further assigned or reassigned to any such institution. To effect such assignments, the Contractor, or Contractor's assignee, shall submit a written request to the Board of Directors enclosing a letter from the proposed assignee indicating that it will accept such assignment. Any attempted assignment contrary to provisions of this paragraph shall be void.

1.14 OTHER CONTRACTS

A. The Board of Directors may undertake or award other contracts for additional work or other work, and the Contractor shall fully cooperate with such other contractors and Authority employees and carefully fit Contractor's own work to such additional work as may be directed by the Project Manager. The Contractor shall not commit or permit any act which will interfere with the performance of work by any other contractor or by Authority employees.

1.15 WARRANTY / WARRANTY WORK

A. One-Year Warranty: The Contractor agrees to maintain and guarantees for a period of twelve (12) months from the date of the issuance of the certificate of acceptance of the Project or the issuance of a temporary certificate of occupancy as requested by the Fire Chief in the Fire Chief's sole discretion, whichever event occurs first, (and for such additional or extended periods for portions of the Work as provided in the Project Manual), that the completed work is free from all defects due to faulty materials, equipment or workmanship and that Contractor shall promptly make whatever adjustments or corrections which may be necessary to cure any defects, including repairs or any damage to theSite, Project, Work, or any system installed therein resulting from such defects. .

B. Warranty Work / Normal Response Time: In the event of failure to comply with the above-mentioned conditions within one (1) week after being notified in writing, the Authority is hereby authorized to proceed to have the defects remedied and made good at the expense of the Contractor who hereby agrees to pay the cost and charges therefore immediately on demand.

C. Warranty Work / Emergency Response Time: If in the opinion of the Authority, defective work creates a dangerous condition, affects the Authority's essential operations / essential use of the facility, affects the safety or preservation of property or personnel, or requires immediate correction or attention to prevent further loss to the Authority, the Contractor shall be required to take corrective action within 24 hours after personal or telephonic notice by the Authority's Property Management Section. If the Contractor cannot be contracted or does not comply with the Authority's request for correction within 24 hours (or a reasonable time as determined by the Authority), the Authority may, notwithstanding the provisions of this article, proceed to make such correction, the cost of which shall be charged against the Contractor.

D. Failure to Take Corrective Action: Failure by the Contractor to take corrective action as specified above shall constitute a material breach of this agreement and will result in the Authority taking whatever corrective action it deems necessary including termination of this agreement. All costs resulting from such action by the Authority will be claimed against Contractor or, if necessary, the Contractor's Performance Bond. The Contractor's Performance Bond shall remain in full force and effect through the warranty period.

E. Alernative Remedy: In the event that the Contractor fails to make adjustments, repairs, corrections or other work made necessary by such defects, or to properly maintain and service the Project, the Authority may do so and charge the Contractor the cost incurred. The performance bond shall remain in full force and effect through the guarantee period or, at the option of the Contractor, a warranty bond in the amount of one hundred percent of the Contract price may be substituted for the performance bond. Such warranty bond must be in a form approved by Authority Counsel, be issued by a surety authorized by the State Insurance Commissioner to transact business in the

State of California as a surety, and must have and maintain, throughout the warranty period, at least an “A-“ policyholder’s rating, or better, and a financial rating of “Class VII,” or better, in accordance with the most current A.M. Best’s Rating Guide.

F. All Inclusive Remedies: The Contractor' obligations under this clause are in addition to the Contractor's other express or implied assurances of this Contract, Project Manual, or state law and in no way diminish any other rights that the Authority may have against the Contractor for faulty materials, equipment, or work.

1.16 EXTRA WORK AND CHANGES

A. The Contract price as set forth in the Contract and the Contractor’s Bid, includes compensation for all work performed by Contractor, unless Contractor obtains a written change order signed by the Project Manager specifying the exact nature of the extra work and the amount of extra compensation to be paid all as more particularly set forth in this Section 1.16. Authority shall extend the time fixed in the Contract Documents for completion of the Project by the number of days reasonably required for Contractor to perform the extra work only if Contractor is actually delayed in the performance of any item of the Project on the critical path by:

1. Any act or neglect of Authority, Project Manager, Design Professional, or any employee, agent, or representative of Authority; or
2. Combined action of workers, either those employed on the Project or in any industry essential to the conduct of the Work not caused by or resulting from default, negligence, or collusion on the part of Contractor or its Subcontractors of every tier; or
3. Unusually severe weather conditions not reasonably anticipatable for that portion of the Cities of Irvine and Tustin the Site is located, based upon U.S. Weather Bureau climatolocial reports for the months included plus a report indicating average precipitation, temperature, etc. for the last ten (10) years from the nearest reporting station; or
4. Excusable Transportation Delays; or
5. Excusable Labor Disputes; or
6. Acts of God; or
7. National Emergency, declared by the President of the United States,

In the event one or more of the specific situations described above occurs, the Scheduled Completion Date may be extended by Change Order for a period not to exceed the length of such delay, provided that Contractor presents a written request to Project Manager, with demonstrated justification, for such time extension within five (5) days of the commencement of such delay. Failure to file such request within the time allowed shall be deemed a waiver of the claim by Contractor. as determined by Project Manager. The decision of the Project Manager shall be final.

B. The Project Manager may, at any time, by written order, and without notice to the sureties, make changes in the drawings or specifications of the Contract Documents if within the general scope thereof. A change order shall also be any other written order (including direction, instruction, interpretation or determination) from the Authority which causes any change, provided Contractor gives the Authority written notice stating the date, circumstances and source of the order and that Contractor regards the order as a change order.

C. If any change under this Section 1.16 causes an increase or decrease in Contractor's actual direct cost or the time required to perform any part of the work under this Contract, whether or not changed by any order, the Project Manager shall make an equitable adjustment and modify the Contract in writing. Except for claims based on defective specifications, no claim for any change shall be allowed for any costs incurred more than 20 days before the Contractor gives written notice as required below. In the case of defective specifications for which the Authority is responsible, the

equitable adjustment shall include any increased direct cost Contractor reasonably incurred in attempting to comply with those defective specifications.

D. No extension of time shall be given unless the delay for which a request is made is included in those items for which an extension to the Scheduled Completion Date is appropriate pursuant to the provisions of this Section 1.16 and the Project Manager finds that such reason for the delay actually adversely affected the ability of the Contractor to complete the Project by the Scheduled Completion Date or to complete a Milestone. Project Manager's decision will be conclusive on the parties to this Contract.

E. No claims by Contractor for additional compensation or damages for delays will be allowed unless Contractor satisfies the Project Manager that such delays were unavoidable and not the result of any action or inaction of Contractor and that Contractor took all available measures to mitigate such damages. The Project Manager's decision will be conclusive on all parties to this Contract.

F. No extension of the Scheduled Completion Date or the right on the part of Contractor to secure any such extension pursuant to this Section 1.16 shall prejudice any right Authority may have under the Project Manual, or otherwise, to terminate this Contract.

G. The Contract Price includes compensation for all work performed by Contractor, unless Contractor obtains a written change order signed by the Project Manager specifying the exact nature of the extra work and the amount of extra compensation to be paid all as more particularly set forth in in this Section 1.16.

H. Project Manager may extend the Scheduled Completion Date by the number of days reasonably required for Contractor to perform the extra work, but only to the extent such extra work actually adversely affects the Scheduled Completion Date, as determined by Project Manager. The decision of the Project Manager shall be final.

I. The Authority or the Fire Chief may order modifications or authorize change orders for any reason. Such modifications shall be reviewed, evaluated, and processed in the manner specified in this Section 1.16.

J. Project Manager may at any time, without notice to any surety, by written order designated or indicated to be a Class 1 or Class 2 Change Order, make any change in the work within the general scope of the Contract, including, but not limited to, changes in:

1. The Project Manual (including drawings and designs);
2. The time, method, or manner of performance of the work;
3. The Authority-furnished facilities, equipment, materials, services, or site; or
4. Directing acceleration in the performance of the work.

K. Except as provided in this Section 1.16, no order, statement or conduct of the Authority or its representatives, including, but not limited to the Fire Chief, Project Manager, or the Architect, shall be treated as a change under this Section 1.16 or entitle Contractor to an equitable adjustment.

L. If any change under this Section 1.16 causes an increase or decrease in Contractor's actual, direct cost or the time required to complete the Project or a Milestone under this Contract and Project Manual, whether or not changed by any order, the Project Manager shall make an equitable adjustment and the Authority shall modify the Contract in writing. Except for Class 1 claims based on defective provisions of the Project Manual, no claim for any change under Section 1.16 shall be allowed for any costs incurred more than 15 days before the Contractor gives written notice as required in this Section 1.16. In the case of defective specifications for which the Authority is responsible, the equitable adjustment shall include any increased direct cost Contractor reasonably incurred in attempting to comply with those defective specifications.

M. If Contractor intends to assert a claim for an equitable adjustment under this Section 1.16, it must, within fifteen (15) days after receipt of a written change order under this Section 1.16 or the furnishing of a written notice hereunder, submit a written statement to the Project Manager setting forth the general nature and monetary extent of such claim. Such claim shall contain the documentation and information as specified herein. The Project Manager may extend the 15-day

period so long as the request for the extension is submitted within such 15-day period and only for good and justified cause. Project Manager's decision regarding any request for extension shall be final and binding on all parties.

N. Claim documentation shall conform to generally accepted accounting principals and all supporting documentation shall be cited by reference, photocopies, or explanation. Supporting documentation may include, but shall not be limited to, general conditions, general requirements, technical specifications, drawings, correspondence, conference notes, shop drawings logs, survey books, inspection reports, delivery schedules, test reports, daily reports, subcontracts, fragmentary schedules or time impact analyses, photographs, technical reports, requests for information, field instructions, and all other related records necessary to support Contractor's claim.

O. Supporting documentation of damages for each claim shall be cited, photocopied, or explained. Supporting documentation may include, but shall not be limited to, any or all documents related to the preparation and submission of the bid; certified, detailed labor records including labor distribution reports, material and equipment procurement records, construction equipment ownership cost records or rental records, Subcontractor or vendor files and cost records, service cost records, purchase orders, invoices, project as planned and as-built records, general ledger records, variance reports, accounting adjustment records, and any other accounting materials necessary to support Contractor's claim.

P. Each copy of the claim documentation shall be certified by a responsible office of the Contractor in accordance with the requirements of the Project Manual.

Q. Should Contractor be unable to support any part of the claim and it is determined that such inability is attributable to falsity of such certification or misrepresentation of fact or fraud on the part of Contractor, the Contractor shall be liable to Authority as provided for under California Government Code Section 12650 *et seq*.

R. Disputed work shall be performed as ordered in writing by the Project Manager, so long as the cost of such work is within the Authority of the Project Manager as described above, so as to minimize the impact on, and delays to, the Work.

S. Costs which shall not be allowed or paid in Change Orders or claim settlements under this Contract include, but are not limited to, interest cost of any type other than those mandated by statute; claim preparation or filing costs; legal expenses; the costs of preparing or reviewing proposed Change Orders or change order proposals concerning change orders which are not issued by the Authority; lost revenues; lost profits; lost income or earnings; rescheduling costs; costs of idled equipment when such equipment is not yet at the Site or has not yet been employed on the Work; lost earnings or interest on unpaid retainage; claims consulting costs; the costs of corporate officers or staff visiting the Site or participating in meetings with the Authority; any compensation due to the fluctuation of foreign currency conversions or exchange rates; loss of other business; or any other cost identified as unallowable cost under the provisions of the Federal Acquisition Regulations.

T. No claim by Contractor for an equitable adjustment shall be allowed if made after final payment under this Agreement. Contractor hereby agrees to make any and all changes, furnish the materials and perform the work that Authority or its Project Manager may require without nullifying this Contract. Contractor shall adhere strictly to the Contract Documents unless a change therefrom is authorized in writing by the Project Manager, subject to the limitations contained herein. Under no condition shall Contractor make any changes to the Project, either in additions or deductions, without the written order of the Authority or its Project Manager and the Authority shall not pay for any extra charges made by Contractor that have not been agreed upon in advance in writing by the Authority. Contractor shall submit immediately to the Authority written copies of its firm's cost or credit proposal for change in the work. Disputed work shall be performed as ordered in writing by the Authority or the Project Manager and the proper cost or credit breakdowns therefor shall be submitted without delay by Contractor to the Project Manager.

U. Project Manager is authorized by the Board of Directors to make, by written order, changes or additions to the work within the scope of the Contract Documents. This authority to approve changes is limited to 10% of the original contract amount. All changes over the amounts specified

above shall be subject to the approval of the Board of Directors. Any change or addition of any kind pursuant to any provision of the Contract Documents which exceeds the limits described in this subsection and which have not been approved by the Board of Directors is void and can not be enforced against the Authority.

V. Any claim of the Contractor for adjustment under this Section 1.16 or any other provision of the Project Manual must be asserted in writing within 15 days from the date of receipt by the Contractor of the notification of change unless the Board of Directors or Project Manager grants a further period of time before the date of final payment under the Contract Documents. Nothing provided in this Article shall excuse the Contractor from proceeding with the prosecution of the work as changed. Except as otherwise provided in this Contract, no charge for any extra work or material will be allowed.

W. Labor wage rates shall not exceed the Prevailing Wage Rates supported by payroll records. Equipment rental rates should be based on latest edition of equipment rental rates published by the State of California Department of Transportation; Division of Construction.

X. Nothing in this Section shall excuse the Contractor from proceeding with the Contract Documents as changed.

1.17 ORAL MODIFICATION

A. No oral statement of any person whomsoever shall in any manner or degree modify or otherwise affect the terms of the Contract or the Project Manual.

1.18 MATERIAL, WORKMANSHIP, AND ACCEPTANCE

A. Where materials are specified by reference to standard specifications of the American Society for Testing Materials (A.S.T.M.), Federal Specifications, or others, all applicable provisions of the designated specifications shall be considered as forming a part of the Contract Documents to the same force and effect as if repeated therein.

B. All work under this Contract Documents shall be performed in a skillful and workmanlike manner. The Project Manager may, in writing, require the Contractor to remove from the work any employee the Project Manager deems incompetent, careless, or otherwise objectionable.

C. The Contractor shall, without charge, replace any material or correct any workmanship found by the Project Manager not to conform to the contract requirements, unless in the public interest the Project Manager consents to accept such material or workmanship with an appropriate adjustment in contract price. The Contractor shall promptly segregate and remove rejected material from the premises.

D. If the Contractor does not promptly replace rejected material or correct rejected workmanship, the Authority (1) may, by contract or otherwise, replace such material or correct such workmanship and charge the cost thereof to the Contractor, or (2) may terminate the Contractor's right to proceed in accordance with Article 21 of these General Conditions.

E. Unless otherwise provided in the Contract Documents, acceptance by the Authority shall be accomplished by recordation of Notice of Completion which shall be made as promptly as practicable after completion and inspection of all work required by the Contract Documents. Acceptance shall be final and conclusive except as regards latent defects, fraud, or such gross mistakes as may amount to fraud, or as regard the Authority's rights under any warranty or guarantee. Informal procedures such as "punch lists" are not to be deemed final or conditional acceptance.

1.19 TERMINATION FOR DEFAULT & DAMAGES FOR DELAY

A. The Contract may be terminated in whole or in part in writing by either party in the event of substantial failure by the other party to fulfill its obligations under this Agreement through no fault of the terminating party, provided that no termination may be effected unless the other party is given: (1) Not less than ten (10) calendar days' written notice (delivered by certified mail, return receipt requested) of intent to terminate; and (2) An opportunity for consultation with the terminating party prior to termination.

B. If the Contractor refuses or fails to prosecute the work with such diligence as will ensure its completion within the time specified in the Contract Documents or any extension thereof, or fails to complete said work within such time, the Board of Directors may, by written notice to the Contractor, terminate Contractor's right to proceed with the work or such part of the work as to which there has been delay. In such event, the Authority may take over the work and prosecute the same to completion, by contract or otherwise, and may take possession of and utilize in completion the work such materials, appliances, and plant as may be on the site of the work and necessary therefor. Whether or not the Contractor's right to proceed with the work is terminated, Contractor and Contractor's sureties shall be liable for any damage to the Authority resulting from Contractor's refusal or failure to complete the work within the specified time.

C. Fixed and agreed liquidated damages are provided in the Contract Documents, these General Conditions, paragraph 1.38 J. If the Authority so terminates the Contractor's right to proceed, the resulting damage will consist of such liquidated damages until such reasonable time as may be required for final completion of the work together with any increased costs occasioned the Authority in completing the work.

D. Fixed and agreed liquidated damages are provided in the Contract Documents, these General Condition, paragraph 1.38 J. If the Authority does not so terminate the Contractor's right to proceed, the resulting damage will consist of such liquidated damages until the work is completed or accepted.

E. The Contractor's right to proceed shall not be so terminated nor the Contractor charged with resulting damage if the Contractor is actually delayed in the performance of any item of the Project on the critical path by:

1. Any act or neglect of Authority, Project Manager, Design Professional, or any employee, agent, or representative of Authority; or

2. Combined action of workers, either those employed on the Project or in any industry essential to the conduct of the Work not caused by or resulting from default, negligence, or collusion on the part of Contractor or its Subcontractors of every tier; or

3. Unusually severe weather conditions not reasonably anticipatable for that portion of the County of Orange where the Project site is located, based upon U.S. Weather Bureau climatolocial reports for the months included plus a report indicating average precipitation, temperature, etc. for the last ten (10) years from the nearest reporting station; or

4. Excusable Transportation Delays; or

5. Excusable Labor Disputes; or

6. Acts of God; or

7. National Emergency, declared by the President of the United States,

The Scheduled Completion Date may be extended by Change Order for a period not to exceed the length of such delay, provided that Contractor presents a written request to Project Manager, with demonstrated justification, for such time extension within five (5) days of the commencement of

such delay. Failure to file such request within the time allowed shall be deemed a waiver of the claim by Contractor. No extension of time shall be given unless the delay for which a request is made is included in those items for which an extension to the Scheduled Completion Date is appropriate as provided above and the Project Manager finds that such reason for the delay actually adversely affected the ability of the Contractor to complete the Project by the scheduled sompletion date. Project Manager's decision will be conclusive on the parties to this Contract. No claims by Contractor for additional compensation or damages for delays will be allowed unless Contractor satisfies the Project Manager that such delays were unavoidable and not the result of any action or inaction of Contractor and that Contractor took all available measures to mitigate such damages. The Project Manager's decision will be conclusive on all parties to this Contract. Project Manager may extend the time indicated for completion of the Project by the number of days reasonably required for Contractor to perform the extra work, but only to the extent such extra work actually adversely affects the Scheduled Completion Date, as determined by Project Manager. The decision of the Project Manager shall be final.

F. The rights and remedies of the Authority provided in this Article are in addition to any other rights and remedies provided by law or under the Contract Documents.

1.20 AUTHORITY'S RIGHTS REGARDING WORK

A. If the Work or any portion thereof is defective and/or does not conform to the Project Manual, or if Contractor fails to supply sufficient skilled workers and suitable material, services, or equipment, or if Contractor fails to make prompt payments to Subcontractors or for labor, materials, or equipment, or if Contractor fails to supervise or coordinate the Work, or if grounds exist pursuant to any other provision of the Project Manual, Project Manager may order Contractor to stop the Work, or any portion thereof, until cause for the order to stop has been eliminated. Project Manager's exercise of this right to stop the Work shall not give rise to any duty on the part of the Project Manager to exercise this right for the benefit of Contractor or any other party. This right to stop the Work pursuant to this Section is in addition to and not in limitation of Authority's rights to terminate this Contract in accordance with the Project Manual.

B. Project Manager may at any time and without cause suspend the Work or any portion thereof by written notice to Contractor and a Change Order shall be issued extending the Scheduled Completion Date by the number of days of such suspension. For suspensions of the Work which are fourteen (14) days or less, Contractor shall recommence the Work at the direction of Project Manager with the Lump Sum Price remaining unchanged. Provided Contractor is not in default of the terms of the Project Manual, if there is a suspension of Work or suspensions which in the aggregate extend beyond fourteen (14) days, Contractor shall recommence the Work at the direction of Project Manager and Contractor and Project Manager shall, at Contractor's written request and through good faith negotiations, equitably adjust the Scheduled Completion Date and any Milestones, and shall equitably adjust the Lump Sum Price, in an amount to be approved by the Fire Chief or the Authority, which approval shall not be unreasonably withheld, for each day of such suspension exceeding fourteen (14) days. Adjustments to the Scheduled Completion Date or completion of a Milestone shall only be provided to the extent the suspension of Work actually adversely affects the Scheduled Completion Date or completion of a Milestone, as determined by Project Manager. The decision of the Project Manager shall be final.

C. In the event the Project Manager determines that the progress of the Work is behind the progress set forth in the Contractor's Construction Schedule, Project Manager may require Contractor to take such actions as the Project Manager deems necessary to expedite the progress of the Work in conformance with the progress set forth in the Contractor's Construction Schedule. Such actions may include without limitation, increasing the number of workers performing the Work, utilizing overtime work, and requiring additional work shifts. Such action by Project Manager to place Contractor back on schedule shall not be the subject of a Change Order increasing the Lump Sum Price, nor shall Contractor receive any additional compensation for these activities.

D. Contractor shall cooperate with Authority, Project Manager, Design Professional, and all other persons as Authority may retain or employ for (by way of illustration only) installation of furniture, decoration, and training, and the like at the Project. Contractor acknowledges that it is critical to

Authority that separate Contractors are allowed to perform and coordinate the installation of furnishings, fixtures, and equipment not covered by this Contract but necessary for the Project. Contractor covenants to use its best efforts to prevent Authority from suffering delay in completion of the Work as a result of Contractor's failure to cooperate and coordinate its work with Related Work as required by the Project Manual.

E. To the extent that Authority timely provides to Contractor information relating to the work of its separate Contractors, the interrelationships between the work of separate Contractors and/or third parties such as Authority's purchasing agent and any other special consultants shall be indicated on the Contractor's Construction Schedule to allow Authority to provide for proper phasing.

1.21. CONTRACT PRICE; METHOD OF PAYMENT; RETENTION OF FUNDS

A. Authority agrees to pay and the Contractor agrees to accept as full consideration for the faithful performance of this Contract, subject to any subsequent additions or deductions as provided in approved change orders, the sum as itemized in the Schedule of Values, as provided in Section 01200 of the Project Manual.

B. Progress payments shall be made to the Contractor per month for each successive month as the work progresses. The Contractor shall be paid such sum as will bring the total payments received since the commencement of the work up to ninety percent (90%) of the value of the work completed, less all previous payments, provided that the Contractor submits the request for payment prior to the end of the day required to meet the payment schedule. The Authority will retain ten percent (10%) of the amount of each such progress estimate and material cost until 30 days after the recordation of the Notice of Completion.

C. The Contractor shall request payment through the preparation andsubmission to Authority of an Invoice in accordance with the Project Manual. It shall show in detail all monies properly payable to the Contractor, approved by the Project Manager, in accordance with the previously approved activities as identified on the Contractor's Construction Schedule, including those items of labor, materials, and equipment used or incorporated in the Work (and, if Authority has agreed in advance in writing, suitably stored at the Site) through and including the Payment Application Date. The Application for Partial Payment shall have, as attachments, waivers of mechanics' and materialmen's liens by the Contractor and its Subcontractors and Sub-subcontractors as of the date of submission of the Application for Partial Payment, which waivers shall conform in all material respects with the then current provisions of Section 3262 of the California Civil Code (or any successor thereto), certifications of payrolls, and such other evidence of performance of the Work, the costs thereof and payment therefor as Authority may deem necessary or desirable.

D. The Contractor warrants that title to all Work, materials and equipment covered by an Application for Partial Payment shall pass to Authority, free and clear of all liens, claims, security interests or encumbrances, upon the sooner occurrence of: (a) the delivery of any such materials or equipment to the Site; or (b) the tender of payment of the applicable Application for Partial Payment by Authority to the Contractor; and that no Work, materials, or equipment covered by an Application for Partial Payment shall have been acquired, whether by the Contractor or by any Subcontractor or Sub-subcontractor, subject to an agreement under which an interest therein or an encumbrance thereon is retained by the seller or otherwise imposed by the Contractor or such other person. The passage of title to Authority as provided herein shall not alter or limit the obligations and duties of the Contractor with respect to the Work and the materials or equipment incorporated therein or used in connection therewith as set forth in the Project Manual. In this regard, it is specifically noted that neither the Authority, nor its Directors, officers, employees, or agents shall be held responsible in any manner for any loss that may happen to the Work or any part thereof during the course of construction; for any loss or damage to any of the materials, equipment, supplies, or other things used or employed in performing the Work; for injury to or death of any person, either workers or the public; or for damage to property, from any cause that might have been prevented by the Contractor, Contractor's workers, employees, Subcontractors, suppliers, or agents.

E. If the Contractor has submitted an Application for Partial Payment in the manner prescribed in the Project Manual, The Project Manager shall, with reasonable promptness, review, approve the same (or such portions thereof covering amounts it determines to be properly due), or shall state in writing its reasons for withholding its approval (whether of all or a part).

F. The Project Manager's approval of an Application for Partial Payment shall not constitute a representation by Authority that the conditions precedent to the Contractor's entitlement to payment have been fulfilled, nor shall approval of an Application for Partial Payment by Authority be deemed a representation by Authority: (a) that it has made exhaustive or continuous on-site inspections to check the quality or quantity of the Work; (b) that it has reviewed the construction means, methods, techniques, sequences, coordination or procedures, or the cleanliness of the Site, or the safety precautions and programs, in connection with the Work; (c) that it has made any examination to ascertain how or for what purposes the Contractor has used the monies previously paid on account of the Contract Sum.

G. No approval of an Application for Partial Payment, progress payment or any beneficial, partial or entire use or occupancy of the Project by Authority shall constitute an acceptance of any Work which is not in accordance with the Project Manual; and regardless of approval of an Application for Partial Payment by Authority, the Contractor shall remain totally obligated and liable for the performance of the Work in strict compliance with the Project Manual.

H. Subject to Authority's rights to offset or withhold as set forth in these General Conditions, after Authority has approved an Application for Partial Payment, in whole or in part, it shall make payment of the amount approved to the Contractor as provided in the Project Manual.

I. Pursuant to California Public Works Contract Code Section 22300, the Contractor will be entitled to post approved securities with the Authority or an approved financial institution in order to have the Authority release funds retained by the Authority to ensure performance of the Contract. Contractor shall be required to execute an addendum to this Contract together with escrow instructions and any other documents in order to effect this substitution.

1.22 RIGHT TO OCCUPY - BENEFICIAL USE

A. Authority reserves the right, prior to Substantial Completion of the entire Project, to use a portion or portions of the Work when Project Manager determines that such portion or portions may be safe for such use provided such use will not unreasonably interfere with the Contractor's orderly progress of the Work. Such use ("beneficial use") shall not be construed as an acceptance of any such Work, or a part of the Work, as substantially complete, nor shall it affect the dates and times when payments shall become due from the Authority to Contractor, nor shall it prejudice Authority's rights pursuant to the Contract or any bonds guaranteeing the same. Notwithstanding such occupancy or use, Contractor shall continue to provide insurance, security, maintenance, utilities, and protection to the Work, unless otherwise agreed by the parties in writing.

B. At the sole discretion of the Fire Chief, any time after beneficial use and prior to issuance of a certificate of occupancy by the Local Jurisdictions, the Fire Chief may request one or more of the local Jurisdictions to issue a temporary certificate of occupancy for a portion or portions of the Project. Upon the issuance of such temporary certificate of occupancy, the Authority may occupy such portion or portions of the Project, and such portions shall be deemed to be substantially complete.

C. Beneficial Occupancy shall not constitute acceptance by Authority or Project Manager of the completed Work or any portion thereof, shall not relieve the Contractor of its full responsibility for correcting defective Work and repairing the Work, shall not be deemed to be the equivalent of completion of the Work and shall not entitle the Contractor to any increase in the Contract Sum.

D. Anything in this Section 1.22 to the contrary notwithstanding, Authority may certify any portion of the Work to be occupied or used hereunder to be Substantially Completed and, upon the Contractor's timely completion or correction of the items on the "punch-list" with respect thereto, accept that portion of the Work.

1.23 FINAL COMPLETION AND FINAL PAYMENT.

A. When all permits for the Work have been approved, accepted, or otherwise signed off as complete by the inspectors of the Local Jurisdictions, Contractor shall certify to the Project Manager in writing within ten (10) days that the Work is complete in accordance with the Project Manual and is ready for occupancy. Project Manager, Architect, and Fire Chief will make an investigation and inspection of all phases of the Work. If all contractual obligations have not been met, Project Manager shall furnish Contractor a detailed list of all remaining work (the "Punchlist") and Contractor shall commence correction of all items on the Punchlist. A letter of acceptance shall be issued upon completion of all Work specified on the Punchlist to the satisfaction of the Project Manager. In no case will the letter of acceptance relieve Contractor of any obligations of Contractor that may be outstanding. Within five (5) business days after issuance of a letter of acceptance, Project Manager and the Design Professional shall issue a certificate of final completion. Upon receipt of the certificate of final completion, Contractor shall submit its final application for payment ("Final Application for Payment") which shall set forth all amounts due and remaining unpaid to Contractor and upon approval thereof by the Project Manager and the Design Professional, Authority shall pay to Contractor the amount due under such Final Application for Payment as provided herein.

B. Before Authority makes the Final Payment to Contractor, all requirements of the Project Manual shall have been fulfilled, including the following:

1. Receipt by Project Manager of a complete list of Subcontractors and principal vendors, including addresses, telephone numbers, and names of individuals to contact who are familiar with the Project, including Contractor;

2. Receipt by Project Manager of all operation and maintenance manuals, approved by the Design Professional;

3. Receipt by Authority of all releases and written guarantees from all Subcontractors and material suppliers for the Project in a form and content satisfactory to the Project Manager, which Contractor hereby agrees to obtain for, and deliver to, Project Manager prior to completion of the Project;

4. Receipt by Project Manager of all "As-Built" records, approved by Project Manager and the Design Professional as specified in the Project Manual;

5. Copies of any other warranties or guarantees received from manufacturers, suppliers, or Subcontractors of Contractor or any Subcontractor; and

6. Evidence satisfactory to the Project Manager showing that the Contractor has promptly and satisfactorily settled all claims, if any, for services performed and materials furnished in connection with the Work.

7. Receipt by Project Manager of all documentation necessary to demonstrate compliance with the Leadership and Environmental Design program requirements (if a LEED project).

C. Final Payment shall not become due until Contractor submits to Project Manager: (1) an affidavit that all payrolls, bills for materials and equipment, and other indebtedness connected with the Work for which Authority or Authority's property might in any way be responsible, have been paid or otherwise satisfied; (2) the consent of the surety to Final Payment; and (3) if reasonably required by the Project Manager, other data establishing payment or satisfaction of all such obligations, such as receipts, releases and waivers of liens arising out of the Contract, to the extent and in such form as may be designated by the Project Manager. Project Manager may require affidavits or certificates of payment and/or releases from any Subcontractor, laborer, or material supplier.

D If any Subcontractor or material supplier refuses to furnish a release or waiver required by Project Manager, Contractor may satisfy its obligation with respect to such Subcontractor or material supplier by furnishing a cash bond, assignment of a certificate of deposit, or other liquid security

satisfactory to Project Manager to indemnify Authority against any lien. If any lien remains unsatisfied after all payments are made, Contractor shall refund to Authority all monies that the Authority may be compelled to pay in discharging such lien, including all costs and reasonable attorneys' fees.

E. The acceptance of Final Payment shall constitute a waiver of all claims by Contractor except those previously made in writing and identified by Contractor as unsettled at the time of the Final Application for Payment.

F. The making of Final Payment shall constitute a waiver of all claims by Authority except those arising from (1) unsettled claims; (2) faulty or defective Work appearing after Final Completion of the Work; (3) failure of the Work to comply with the requirements of the Project Manual; (4) terms of any special warranties required by the Project Manual; (5) "Punchlist" items not yet completed by the Contractor; (6) discrepancies noted in subsequent audits performed by Authority or its agents within one (1) year following Final Payment; or (7) any claims identified by Project Manager as unsettled prior to making of Final Payment.

G. Final Payment shall not relieve Contractor of its warranty and indemnification obligations pursuant to the Project Manual, which shall survive such payment.

H. Contractor shall keep and present within fifteen (15) days after request by Authority or its agents, in a form reasonably approved by the Project Manager, a final itemized accounting of all expenditures made in connection with the Work together with appropriate supporting data.

I. If any Subcontractor or Sub-subcontractor refuses to furnish any release, satisfaction or waiver of lien required at any time by Authority under Paragraphs 9.1., or files a claim of lien against Authority's property, the Contractor shall, if requested by Project Manager and at the Contractor's expense, furnish and record a Mechanic's Lien Release Bond (separate and apart from any other bond provided by the Contractor hereunder) that is in full compliance with the requirements of the then current provisions of Section 3143 of the California Civil Code. If any Subcontractor or Sub-subcontractor serves a Stop Notice (bonded or otherwise) on Authority, Contractor shall, if requested by Authority and at Contractor's expense, furnish a Stop Notice Release Bond (separate and apart from any other bond provided by the Contractor hereunder) that is in full compliance with the then current provisions of Section 3171 of the California Civil Code. The Contractor authorizes Authority, and shall cause its Subcontractors and Sub-subcontractors to authorize Authority, to check directly with any suppliers of labor and material with respect to any item chargeable to Authority's property, to confirm balances due and to obtain sworn statements and waivers of lien, all if Authority so elects. If any lien remains unsatisfied after all payments are made to the Contractor, the Contractor shall reimburse Authority on account of all monies that the latter may be compelled to pay in discharging such lien, including all costs and attorneys' fees.

1.24 SURETY BONDS.

A. Contractor shall, upon entering into performance of this Agreement, furnish a bond in the amount of one hundred percent (100%) of the Contract price bid, to guarantee the faithful performance of the work, and an additional bond in the amount of one hundred percent (100%) of the Contract price bid to guarantee payment of all claims for labor and materials furnished. The bonds required pursuant to this Section shall be issued by a surety authorized by the State Insurance Commissioner to transact business in the State of California as a surety and shall have and maintain throughout the life of the Project, at least an "A-" policyholder's rating, or better, and a financial rating of "Class VII," or better, in accordance with the most current A.M. Best's Rating Guide. This Contract shall not become effective until such bonds are supplied to and approved by the Authority.

1.25 INSURANCE.

A. Contractor is also aware of the provisions of Section 3700 of the Labor Code which requires every employer to be insured against liability for Workers' Compensation or undertake self-insurance in accordance with the provisions of that Code and will comply with such provisions before commencing the performance of the work of this Contract.

B. Contractor and all Subcontractors will carry workers' compensation insurance for the protection of its employees during the progress of the work. The insurer shall waive its rights of subrogation against Authority, its officers, agents and employees and shall issue a certificate to the policy evidencing same.

C. Contractor shall at all times carry, on all operations hereunder, bodily injury, including death, and property damage liability insurance, including automotive operations bodily injury and property damage coverage; and builders' all risk insurance. All insurance coverage shall be in amounts specified by Authority in the Insurance Requirements and shall be evidenced by the issuance of a certificate in a form prescribed by the Authority and shall be underwritten by insurance companies satisfactory to Authority for all operations, subcontract work, contractual obligations, product or completed operations, all owned vehicles and non-owned vehicles. Said insurance coverage obtained by the Contractor, excepting workers' compensation coverage, shall name the Authority, its Officers, Agents, Employees, Engineers, and Consultants for this Contract, and all public agencies from whom permits will be obtained and their Directors, Officers, Agents and Employees, as determined by the Authority, as additional insureds on said policies.

D. Before Contractor performs any work at, or prepares or delivers materials to, the site of construction, Contractor shall furnish certificates of insurance evidencing the foregoing insurance coverages and such certificates shall provide the name and policy number of each carrier and policy and that the insurance is in force and will not be canceled without thirty (30) days written notice to Authority. Contractor shall maintain all of the foregoing insurance coverages in force until the work under this Contract is fully completed. The requirement for carrying the foregoing insurance shall not relieve Contractor from the provisions for indemnification of Authority by Contractor under Article 17 of this Contract. Notwithstanding nor diminishing the obligations of Contractor with respect to the foregoing, Contractor shall subscribe for and maintain in full force and effect during the life of this Contract, the following insurance in amounts not less than the amounts specified and issued by a company admitted as an insurer in California and shall have and maintain throughout the life of the Project, at least an “A-“ policyholder’s rating, or better, and a financial rating of “Class VII,” or better, in accordance with the most current A.M. Best’s Rating Guide:

Workers Compensation	In accordance with the Workers' Compensation Act of the State of California, with a minimum of $1,000,000.
Public Liability, in the form of either Comprehensive or General Liability written on a full occurrence basis	Combined single limit of $10,000,000 per occurrence for bodily injury, death and property damage; or $2,500,000 per occurrence with $10,000,000 aggregate for bodily injury, death, and property damage.
Automobile Liability, including non-owned and hired vehicles	Combined single limit of $2,500,000 on a per occurrence basis.

E. Authority or its representatives shall at all times have the right to inspect and receive the original or a certified copy of all said policies of insurance, including certificates. Contractor shall pay the premiums on the insurance hereinabove required.

1.26 RISK AND INDEMNIFICATION

A. Indemnification: To the fullest extent permitted by law, Contractor shall indemnify, defend (at Contractor’s sole cost and expense and with legal counsel approved by Authority, which approval shall not be unreasonably withheld), protect and hold harmless Authority and all of Authority’s officers, directors, employees, consultants, agents, successors and assigns (collectively the “Indemnified Parties”), from and against any and all claims (including, without limitation, claims for bodily injury, death or damage to property), demands, obligations, damages, actions, causes of action, suits, losses, judgments, fines, penalties, liabilities, costs and expenses (including, without limitation, attorneys’ fees, disbursements and court costs, and all other professional, expert or consultants’ fees and costs and Authority’s general and administrative expenses) of every kind and

nature whatsoever (individually, a “Claim”; collectively, “Claims”) which may arise from or in any manner related (directly or indirectly) to any work performed or services provided under this Agreement (including, without limitation, the negligent and/or willful acts, errors and/or omissions of Contractor, its principals, officers, agents, employees, Contractors, suppliers, consultants, subconsultants, subcontractors, anyone employed directly or indirectly by any of them or for whose acts they may be liable or any or all of them) regardless of any active or passive negligence or strict liability of an Indemnified Party. Contractor understands and acknowledges that the indemnification obligation hereunder is intended to constitute a “Type I” indemnity under California law and extends to and includes Claims arising from the active or passive negligence of Indemnified Parties. Notwithstanding the foregoing, nothing herein shall be construed to require Contractor to indemnify the Indemnified Parties from any Claim arising from the sole negligence or willful misconduct of the Indemnified Parties.

B. Duty to Defend: The duty to defend hereunder is wholly independent of and separate from the duty to indemnify and such duty to defend exists regardless of any ultimate liability of Contractor. Such defense obligation shall arise immediately upon presentation of a Claim by any party and written notice of such Claim being provided to Contractor. Payment to Contractor by any Indemnified Party or the payment or advance of defense costs by any Indemnified Party shall not be a condition precedent to enforcing such Indemnified Party’s rights to indemnification hereunder. Contractor’s indemnification obligation hereunder shall survive the expiration or earlier termination of this Agreement until such time as action against the Indemnified Parties for such matter indemnified hereunder is fully and finally barred by the applicable statute of limitations or statute of repose. Contractor’s liability for indemnification hereunder is in addition to any liability Contractor may have to Authority for a breach by Contractor of any of the provisions of this Agreement. Under no circumstances shall the insurance requirements and limits set forth in this Agreement be construed to limit Contractor’s indemnification obligation or other liability hereunder. The terms of this Agreement are contractual and the result of negotiation between the parties hereto. Accordingly, any rule of construction of contracts (including, without limitation, California Civil Code Section 1654) that ambiguities are to be construed against the drafting party shall not be employed in the interpretation of this Agreement.

1.27 TERMINATION

A. The performance of work under the Contract Documents may be terminated in whole, or from time to time in part, whenever the Board of Directors shall determine that such termination is in the best interest of the Authority. provided that the Contractor is given (1) Not less than ten (10) calendar days' written notice (delivered by certified mail, return receipt requested) of intent to terminate; (2) the extent to which performance of work under the Contract Documents is terminated: (3) the date upon which such termination becomes effective; and (4) An opportunity for consultation with the terminating party prior to termination.

B. This Contract may be terminated, or the right of the Contractor to complete the Project may be terminated, without liability or damage, when in the Authority’s opinion, the Contractor is not complying with the Contract requirements in good faith, has become insolvent, or has assigned or subcontracted any part of the Work without the Authority’s consent. In the event of such termination, the Contractor will be paid the actual amount due based upon the quantity of work completed at the time of termination, less damages caused to the Authority by acts of the Contractor causing the termination. The Contractor, in having tendered a bid, shall be deemed to have waived any and all claims for damages because of termination of the Contract or the right of the Contractor to complete the Project for any cause stated in this Section 1.27.

C. If termination is effected by the Authority, an equitable adjustment in the price provided for in this Contract shall be made, but (1) no amount shall be allowed for anticipated profit on unperformed services or other work, and (2) any payment due to the Contractor at the time of termination may be adjusted to cover any additional costs to the Authority because of the Contractor’s default. The equitable adjustment for any termination shall provide for payment to the Contractor for services rendered and expenses incurred in accordance with Section 8 of the California, Department of Transportation Standard Specifications.

D. After receipt of a Notice of Termination, and except as otherwise directed by the Board of Directors, the Contractor shall:

(1) Stop work under the Contract Documents on the date and to the extent specified in the Notice of Termination;

(2) Place no further orders or subcontracts for materials, services, or facilities except as may be necessary for completion of such portion of the work under the Contract Documents as is not terminated;

(3) Terminate all orders and subcontracts to the extent that they relate to the performance of work terminated by the Notice of Termination;

(4) Assign to the Authority, all of the right, title and interests of the Contractor under the orders and subcontracts so terminated, in which case the Authority shall have the right, in its discretion, to settle or pay any or all claims arising out of the termination of such orders and subcontracts;

(5) Settle all outstanding liabilities and all claims arising out of such termination of orders and subcontracts, subject to the approval of the Board of Directors;

(6) Complete performance of such part of the work as shall not have been terminated by the Notice of Termination;

(7) Deliver or otherwise make available to the Authority all data, drawings, specifications, reports, estimates, summaries and such other information and materials as may have been accumulated by the Contractor in performing this Contract whether completed or in process;

(8) Take such action as may be necessary, or as the Project Manager may direct, for the protection and preservation of the property related to the Contract Documents which is in the possession of the Contractor and in which the Authority has, or may acquire, interest.

E. After receipt of a Notice of Termination, the Contractor shall submit to the Project Manager a verified termination claim. Such claim shall be submitted promptly but in no event later than one year from the effective date of termination, unless one or more extensions in writing are granted by the Board of Directors upon request of the Contractor made in writing within such one-year period or authorized extension thereof.

F. If any dispute concerning a question of fact arising under the terms of this Contract is not disposed of within a reasonable period of time by Contractor and Project Manager, such matter shall be brought to the attention of the Authority. If agreement cannot be reached through this application, either party may assert its other rights and remedies within this Contract or within a court of competent jurisdiction. The Parties agree that, in the event of a dispute notwithstanding, they will continue without delay to carry out all their responsibilities under this Contract. The Contractor and the Board of Directors may agree upon the whole or any part of the amount or amounts to be paid to the Contractor by reason of the total or partial termination of work pursuant to this Article, which amount or amounts may include a reasonable allowance for profit on work done; provided, that such agreed amount or amounts, exclusive of settlement costs, shall not exceed the total contract price as reduced by the amount of payments otherwise made and as further reduced by the contract price of work not terminated. The Contract Documents shall be amended accordingly, and the Contractor shall be paid the agreed amount.

1.28 PATENT INFRINGEMENT

A. The Contractor shall report to the Project Manager, promptly and in reasonable detail, each notice or claim of patent infringement based on the performance of the Contract Documents of which the Contractor has knowledge.

B. In the event of any suit against the Authority, or any claim against the Authority made before suit has been instituted, on account of any alleged patent infringement arising out of the performance of the obligations under the Contract Documents, or out of the use of any supplies furnished or work or services performed hereunder, the Contractor shall, at Contractor's own expense, furnish to the Authority, upon request, all evidence and information in possession fo the Contractor pertaining to such suit or claim. The Contractor further agrees to indemnify and hold harmless the Authority against any and all claims or lawsuits based upon such patent infringement, to defend such suits, and to pay any judgment rendered against authority, its employees, or the Board of Directors.

1.29 NO WAIVER BY AUTHORITY

The failure of the Authority in any one or more instances to insist upon strict performance of any of the terms of the Contract Documents or to exercise any option herein conferred, shall not be construed as a waiver or relinquishment to any extent of the right to assert or rely upon any such terms or option on any future occasion.

1.30 DISPUTES

A. In the event of a dispute between the parties as to performance of the work, the interpretation of the Contract Documents, or payment or nonpayment for work performed, the parties shall attempt to resolve the dispute. Pending resolution of the dispute, the Contractor shall continue the work diligently to completion as directed by Project Manager. If the dispute is not resolved, the Contractor agrees Contractor will neither rescind the Contract Documents nor stop the progress of the work.

B. Notwithstanding the foregoing, with respect to any dispute involving a claim by the Contractor for additional compensation, Contractor shall submit such claim in writing to Project Manager promptly as the alleged facts giving rise to, or the alleged bases for, the claim become known to the Contractor: any such claim not promptly so submitted to Project Manager shall be deemed waived: and in no event shall a claim for additional compensation be asserted or be assertable after completion or cessation of the work.

C. Except as otherwise provided herein, the Authority and the Contractor shall comply with the provisions of California Public Contracts Code Section 20104 *et seq*., re resolution of construction claims for any claims which arise between the Contractor and the Authority.

1.31 ATTORNEYS' FEES

A. If any action at law or in equity is necessary to enforce or interpret the terms of this Contract, each party shall be responsible for their respective costs, including attorneys' fees. The prevailing party shall not be entitled to recover its attorneys' fees or related costs. Nevertheless, if any action is brought against the Contractor or any Subcontractor to enforce a Stop Notice or Notice to Withhold, which named the Authority as a party to said action, the Authority shall be entitled to reasonable attorneys' fees, costs and necessary disbursements arising out of the defense of such action by the Authority. The Authority shall be entitled to deduct its costs for any Stop Notice filed, whether court action is involved or not.

1.32 CONTRACTOR'S EMPLOYEES COMPENSATION

A. General Prevailing Rate: Authority has been advised by the State of California Director of Industrial Relations of the Director's of the general prevailing rate of per diem wages and the general prevailing rate for legal holiday and overtime work in the locality in which the work is to be performed for each craft or type of work needed to execute this Contract, and copies of the same are on file in the Office of the Engineer of Authority. The Contractor agrees that not less than said prevailing rates shall be paid to workers employed on this public works contract as required by Labor Code Section 1774 of the State of California.

B. Forfeiture For Violation: Contractor shall, as a penalty to the Authority, forfeit Fifty Dollars ($50.00) for each calendar day or portion thereof for each worker paid (either by the Contractor or any subcontractor under it) less than the prevailing rate of per diem wages as set by the Director of Industrial Relations, in accordance with Sections 1770-1780 of the California Labor Code for the work provided for in this Contract, all in accordance with Section 1775 of the Labor Code of the State of California.

C. Apprentices: Sections 1777.5, 1777.6 and 1777.7 of the Labor Code of the State of California, regarding the employment of apprentices is applicable to this Contract and the contractor shall comply therewith if the prime contract involves Thirty Thousand Dollars [$30,000.00] or more or twenty (20) working days, or more; or if contracts of specialty contractors not bidding for work through the general or prime contractor are Two Thousand Dollars [$2,000.00] or more or Five (5) working days or more.

D. Workday: In the performance of this Contract, not more than eight (8) hours shall constitute a day's work, and Contractor shall not require more than eight (8) hours of labor in a day from any person employed by him hereunder except as provided in Section 14.2 above. Contractor shall conform to Article 3, Chapter 1, Part 7 (Sections 1810 et seq.) of the Labor Code of the State of California and shall forfeit to the Authority as a penalty, the sum of twenty-five Dollars ($25.00) for each worker employed in the execution of this Contract by Contractor or any Subcontractor for each calendar day during which any worker is required or permitted to labor more than eight (8) hours in any one calendar day and forty (40) hours in any one week in violation of said Article. Contractor shall keep an accurate record showing the name and actual hours worked each calendar day and each calendar week by each worker employed by Contractor in connection with the Project.

E. Record of Wages; Inspection: The Contractor and each subcontractor performing any portion of the work under the Contract Documents shall keep an accurate record, showing the name, address, social security number, work classification, straight time and overtime hours worked each day and week, and the actual per diem wages paid to each journeyman, apprentice, worker, or other employee employed by Contractor in connection with the work. Said payroll records shall be certified and shall be available for inspection at the principal office of the Contractor on the basis set forth in Labor Code Section 1776. The Contractor shall file a certified copy of said payroll records with the Authority within ten days after receipt of a written request therefor from Project Manager or othersise from the Authority. The Contractor shall inform the Authority of the location of said payroll records, including the street address, City and State, and shall, within five working days, provide a notice of change of location and address of said payroll records. It shall be the responsibility of the Contractor to ensure the compliance with the provisions of this Article and the provisions of Labor Code Section 1776. In the event of noncompliance with the requirements of this Article or the requirements of Labor Code Section 1776, the Contractor shall have ten days in which to comply subsequent to receipt of written notice specifying in what respects Contractor must comply. Should noncompliance exist after said ten-day period, the Contractor shall, as a penalty to the Authority, forfeit Twenty-five Dollars ($25) for each calendar day, or portion thereof, for each worker to whom the noncompliance pertains until strict compliance is effectuated. The Contractor acknowledges that, without limitation as to other remedies of enforcement available to the Authority, upon the request of the Division of Apprenticeship Standards or the Division of Labor Standards Enforcement of the California Department of Industrial Relations, such penalties shall be withheld from progress payments then due the Contractor.

1.33 SAFETY & HEALTH

A. The General Contractor (the Contractor) shall be responsible for initiating, maintaining and supervising all safety precautions and programs in connection with the Work. The Contractor shall take all precautions and follow all procedures for the safety of, and shall provide all protection to prevent injury to, all persons involved in any way in the Work and all other persons, including, without limitation, the employees, agents, guests, visitors, invitees and licensees of Authority who may be involved. These precautions shall include, but in no event be limited to the:

1. Provisions of Local, State and Federal Regulations.

2. Posting of danger signs and personal notification to all affected persons of the existence of a hazard, of whatever nature.

3. Furnishing and maintaining of necessary traffic control barricades and flagman services.

4. Use or storage of required explosives or other hazardous materials only under the supervision of qualified personnel.

5. Maintenance of adequate quantities of operable fire protection equipment at the Work Site, as required by Local and /or State regulations.

B. The Contractor shall set forth in writing its site specific safety precautions and programs in connection with the Work, including an Anti-Substance Abuse Program which meets or exceeds any and all applicable laws, ordinances, rules, regulations, and orders of any public, quasi-public, or other authority relating to the safety of persons and their protection against injury, specifically including, but in no event limited to the:

1. California Occupational Safety and Health Act of 1973, as amended, and rules and regulations now or hereafter in effect pursuant to said Act.

2. California Code of Regulations, Title 8, as amended.

3. The Labor Code of the State of California, as amended.

4. Federal Occupational Safety and Health Act of 1970, as amended, and all rules and regulations now or hereafter in effect pursuant to said Act.

5. Code of Federal Regulations , Title 29, as amended.

6. The Drug-Free Workplace Act of 1988.

In the event of conflicting requirements, the more stringent shall govern and if requested by Authority, submit the same to Authority for review. Authority may, but shall not be obligated to, make suggestions and recommendations to the Contractor. Authority shall review and approve the Contractor's Site Specific Program.

C. All work, whether performed by the Contractor or its Subcontractors, of all tiers or anyone directly or indirectly employed by any of them, and all equipment, machinery, materials, tools and like items incorporated or used in the Work, shall be compliance with and conform to:

1. All applicable laws, ordinances, rules, regulations, and orders of any public, quasi-public, or other authority relating to the safety of persons and their protection against injury, specifically including, but in no event limited to, the Federal Occupational Safety and Health Act of 1970, as amended, and all rules and regulations now or hereafter in effect pursuant to said Act, and California Code of Regulations, Title 8, as amended; and,

2. All codes, rules, regulations and requirements of Authority and its insurance carriers relating thereto. In the event of conflicting requirements, the more stringent shall govern.

D. The Contractor shall designate a responsible and qualified member of its organization at the Work Site who has the authority to enforce the Contractor's Safety and Anti-Substance Abuse Programs, to assure compliance with Paragraph 10.1 and to prevent accidents.

E. The Contractor shall have a safety representative. The Contractor's safety representative will have:

1. The authority to stop work when safety problems are identified.

2. The authority to implement corrective actions.

3. Extensive training in safety and loss control practices regarding the Contractor's type of work.

4. Certification in the OSHA Construction Outreach 10/30 Hour Program.

5. Certification in first-aid and CPR.

F. The Contractor shall require its Subcontractors of all tiers to designate a competent and responsible safety representative to assist the Contractor's representative in the performance of his or her duties.

G. Should the Contractor fail to provide a safe work environment in accordance with the provisions in 10.1.1, Authority or Project Manager shall have the right, but not the obligation, to suspend Work in the unsafe area, as specified in 10.6. All costs of any nature resulting from the suspension, by whomsoever incurred, shall be paid by the Contractor.

H After a Contractor has been awarded the construction contract for the Project, it will be required to attend a pre-construction safety meeting. The purpose of the meeting is to review the Project's Safety Program and requirements. At this time, specific safety concerns related to the Contractor's work will be discussed.

I. If deemed necessary by the Project Manager or Project Safety Coordinator, or other Authority representative, a written Job Safety Analysis (JSA) will be required of the Contractor. The JSA will be required for frequency and severity exposures such as steel erection, deep excavations, spray painting, crane handling of large/expensive equipment, etc. This is to ensure that appropriate controls are established prior to work beginning.

J. Workplace violence (Type III), verbal intimidation or threats to the Project Manager, Authority or designee will result in immediate removal from the Project. Contractor shall develop and implement a workplace violence policy and procedure.

K. The Contractor shall provide, or cause to be provided, each worker on the Site the proper safety equipment for the duties being performed by that worker and will not permit any worker on the Site who fails or refuses to use the same. Authority and/or Project Manager shall have the right, but not the obligation, to order the Contractor to send a worker off the Site for the day or to require the contractor to not allow the worker any further work on Authority's site for his or her failure to comply with safety practices, with which order the Contractor shall promptly comply.

L. The Contractor shall defend, indemnify, and hold the Project Manager, Authority, and their respective officers, directors, agents, employees, and assigns harmless from and against any and all liability, public or private, penalties, contractual or otherwise, losses, damages, costs, attorneys' fees, expenses, causes of action, claims or judgments resulting either in whole or in part from any failure of the Contractor, or its Subcontractors, of all tiers or anyone directly or indirectly employed by any of them or for whose acts any of them may be liable, to comply with provisions of the Project Manual, including but not limited to all applicable laws, ordinances, rules, regulations, and orders of any public, quasi-public, or other authority relating to the safety of persons and their protection against injury, specifically including, but in no event limited to, the Federal Occupational Safety and Health Act of 1970, as amended, and all rules and regulations now or hereafter in effect pursuant to said Act. The Contractor shall not be relieved of its responsibilities under this Subsection L should Authority act or fail to act pursuant to its rights hereunder, nor shall Authority thereby assume, nor be deemed to have assumed, any responsibilities otherwise imposed on the Contractor by this Contract, by virtue of providing Authority's Safety Policies & Procedures, or any other manner whatsoever.

M. The Contractor shall not raise a defense as to its obligation to indemnify under Subsection L above any contributing negligence of any of those indemnified hereunder, its being understood and agreed that no such contributing negligence shall relieve the Contractor from its liability to so indemnify nor entitle the Contractor to any contribution, either directly or indirectly, by those indemnified hereunder.

N. In any and all claims against those indemnified hereunder by any employee of the Contractor or its Subcontractors of all tiers, anyone directly or indirectly employed by any of them or anyone for whose acts any of them may be liable, the indemnification obligation under this Section 1.33 shall not be limited in any way to any limit on the amount or type of damage, compensation or benefits payable by or for the Contractor or its Subcontractors of any tiers under any Worker's Compensation Acts, Disability Benefit Acts or other Employee Benefit Acts.

O. In connection with the performance of this contract, Authority shall have the authority to enter the worksite at any time for the purpose of identifying the existence of conditions, either actual or threatened, that may present a danger or hazard to any and all employees. Contractor agrees that Authority, in its sole authority and discretion, may order the immediate abatement of any and all conditions that may present an actual or threatened danger or hazard to any and all employees at the worksite. Contractor acknowledges that provisions of Section 6400 of the California Labor Code, which requires that employers shall furnish employment and a place of employment that is safe and healthful for all employees working therein. In the event Authority identifies the existence of any condition that presents an actual or threatened danger or hazard to any or all employees at the worksite, Authority is hereby authorized to order the immediate abatement of that actual or threatened condition pursuant to this Section. Authority may also, at its sole authority and discretion, issue an immediate stop work order to Contractor to ensure that no employee working at the worksite is exposed to a dangerous or hazardous condition. Any stop work order issued by Authority to Contractor in accordance with the provisions of this Section, shall not give rise to any claim or cause of action for delay damages by Contractor or Contractor's agents or subcontractors against Authority.

1.34 NON-DISCRIMINATION

A. Contractor covenants that, by and for itself, successors, and assigns, including its Subcontractors and suppliers, that there shall be no discrimination against or segregation of, any person or group of persons on account of race, color, creed, religion, gender, marital status, national origin, sexual orientation, or ancestry in the performance of this Contract. Contractor shall take steps to ensure that applicants for any job and that employees are treated without regard to their race, color, creed, religion, gender, marital status, national origin, sexual orientation, or ancestry in full compliance with applicable federal, state, and local laws and regulations.

B. Contractor shall not engage in, nor permit its agents, including its Subcontractors and suppliers, to engage in discrimination in employment of persons or provision of services or supplies, on the grounds of race, color, creed, religion, gender, marital status, national origin, sexual orientation, or ancestry.

C. Contractor, and Contractor's Subcontractors and suppliers, shall employ fair employment practices with regard to all employees and all applicants for employment and shall act in accordance with all applicable federal, state, and local laws and regulations relating to such fair employment practices. In furtherance of such obligation, Contractor agrees that Contractor, Subcontractors, and suppliers shall not discriminate in employment and/or provision of services under this Contract and all employment practices shall be without regard to a person's race, color, creed, religion, gender, national origin, age, ancestry, physical handicap, medical condition, marital status, all in accordance with applicable federal, state, and local laws or regulations. Fair employment practices shall include, but not be limited to, employment, upgrading, demotion or transfer, recruitment or recruitment advertising, layoff or termination, rate of pay or other form of compensation and selection for training including apprenticeship.

D. In the performance of the terms of the Contract Documents, Contractor agrees that Contractor will not engage in nor permit such subcontractors as Contractor may employ to engage in discrimination against any employee or applicant for employment on the basis of race, sex, color, religion, ancestry, national origin, marital status, age or as an otherwise qualified handicapped individual. This prohibition shall pertain to employment, upgrading, demotion, or transfer, recruitment advertising, layoff or termination, rates of pay and other forms of compensation,

selection for training, including apprenticeship, and any other action or inaction pertaining to employment matters.

1.36 ASSIGNMENT OF ANTITRUST ACTIONS

A. In accordance with public Contract Code Section 7103.5, by entering into the Contract Documents or into a subcontract to supply goods, services, or materials pursuant to the Contract Documents, the Contractor, or subcontractor, offers and agrees to assign to the Authority all rights, title, and interest in and to all causes of action it may have under Section 4 of the Clayton Act (15 U.S.C. Sec. 15) or under the Cartwright Act (Chapter 2 [commencing with Section 16700] of Part 2 of Division 7 of the Business and Professions Code), arising from purchases of goods, services, or materials pursuant to the Contract Documents or the subcontract. This assignment shall be made and become effective at the time the Authority tenders final payment to the Contractor, without further acknowledgment by the parties. The contractor shall cause to be inserted in any such subcontract stipulations to effectuate this Article and the provision of Public Contract Code Section 7103.5.

1.37 SUBSTITUTED SECURITY

A. In accordance with Section 22300 of the Public Contract Code, the Authority will, at the request and expense of the Contractor, accept securities equivalent to any amount withheld by the Authority to ensure performance under the Contract Documents. Such substituted security must meet the requirements of said Section 22300, and shall be deposited with a California or federally chartered bank as escrow agent. The security shall be held by the escrow agent subject to a written escrow agreement among Authority, Contractor, and escrow agent, which Agreement shall be in a form substantially similar to that contained in Public Contract Code, Section 22300.

1.38 TIME OF COMMENCEMENT; TIME IS OF THE ESSENCE

A. Commencement: Contractor agrees to commence the Project within 10 calendar days from the date the Authority's Board approves this Contract and Contractor shall diligently prosecute the work to Substantial Completion of the Milestones as identified in the Contractor's Construction Schedule and Substantial Completion of the Project no later than the Scheduled Completion Date, excluding modifications for delays caused or authorized by the Authority as set forth in Section 1.16.

B. Construction Schedule: Within 30 days of the Award of the Contract, Contractor shall furnish to the Project Manager one reproducible, three prints, and an electronic or digital copy in a format approved by the Project Manager of the Contractor's Construction Schedule. Upon submission by Contractor, and approval by the Project Manager, the Contractor's Construction Schedule shall be attached to Project Manaul as an Exhibitand shall be deemed the baseline schedule. The Contractor's Construction Schedule shall identify and specify scheduling for the Work based on the critical path method (or other scheduling method acceptable to the Project Manager) and updating thereof, and shall provide other schedules that would further the efficient completion of the Project, including the Work and the Related Work in the most expeditious and economical manner. The Contractor's Construction Schedule shall depict in detail the sequence and timing of all activities of the Work and Related Work, including, without limitation, commencement and Completion Dates of Milestones and for all other significant portions of the Work and Related Work. The Contractor's Construction Schedule shall be updated at least monthly, except that the Scheduled Completion Date shall not be changed or modified unless otherwise approved by the Project Manager pursuant to the terms of this Contract.

C. Progress Reports: Concurrently with its submission of Applications for Payment, Contractor shall provide the Project Manager with a report (1) detailing the actual progress of the Work and Related Work as of the date of such report; (2) stating any discrepancies between the actual progress of the Work and Related Work; (3) identifying the progress anticipated by the Contractor's Construction Schedule as of the date of such reports; and (4) stating a recovery schedule to place the Work and Related Work back on schedule, at no cost to the Authority. The Contractor's Construction Schedule shall include Milestones for each aspect of the Work and the timing for completion of

Related Work that could affect completion of the Work by the date listed in the Contractor's Construction Schedule.

D. TIME IS THE ESSENCE OF THIS CONTRACT: NOTWITHSTANDING AUTHORITY'S APPROVAL OF ANY UPDATED CONTRACTOR'S CONSTRUCTION SCHEDULE, THE SCHEDULED COMPLETION DATE SHALL BE STRICTLY ADHERED TO DURING THE TERM OF THIS CONTRACT. THE SCHEDULED COMPLETION DATE MAY ONLY BE CHANGED AS PROVIDED IN THE CONSTRUCTION CONTRACT.

E. Ongoing Responsibility of Contractor: As required by the Project Manual, Contractor shall prepare and obtain approval of all shop drawings, submittals, details, and samples, and do all other things necessary and incidental to the prosecution of Contractor's work in conformance with the Project Manual and Contractor's Construction Schedule. Contractor shall coordinate the Work with the Related Work through the Project Manager, in a manner that will facilitate the efficient completion of the Project in accordance with the Project Manual.

F. Control of the Site and Order of Work: Contractor shall have control of the Site and shall have the right to decide the time or order in which the various portions of the work shall be constructed or installed consistent with the Contractor's Construction Schedule and shall establish the priority of the work of Subcontractors of the Work and the Related Work, and, in general, all matters representing the timely and orderly completion of the Project.

G. Cooperation: Notwithstanding the Scheduled Completion Date, Contractor will cooperate with the Authority and the Authority's separate Contractors, consultants, and employees and Contractor agrees to provide for and coordinate access to the Project prior to the Scheduled Completion Date.

H. IT IS SPECIFICALLY AGREED THAT CONTRACTOR ASSUMES THE RISK OF NONPERFORMANCE, LATE PERFORMANCE, AND NONCOMPLIANCE WITH THE REQUIREMENTS OF THE PROJECT MANUAL BY CONTRACTOR, CONTRACTOR'S SUBCONTRACTORS, SUPPLIERS, AND AGENTS. CONTRACTOR SHALL NOT BE ENTITLED TO AN EXTENSION OF ANY COMPLETION DATE OF THE SCHEDULED COMPLETION DATE FOR THE ABOVE STATED REASONS OR ANY OTHER REASONS, EXCEPT AS OTHERWISE EXPRESSLY PROVIDED IN THE PROJECT MANUAL.

I. Notification of Inability to Comply: If the Contractor, at any time, ascertains that for any reason it is unable to complete the phases of the Work by the Milestones, or complete the Project by the Scheduled Completion Date, Contractor shall promptly and without delay notify the Project Manager in writing of this fact.

J. Liquidated Damages: The Parties acknowledge and agree that if Contractor fails to achieve Substantial Completion of the Project by the Scheduled Completion Date or fails to achieve Substantial Completion of a Milestone, as such dates may be extended in accordance with the Project Manual, Authority will suffer, as a result of Contractor's failure, substantial damages which are both extremely difficult and impracticable to ascertain. Therefore the Parties having reasonably endeavored, but failed, to ascertain an amount bearing a reasonable relationship to the actual damage that Authority will incur if Contractor fails to achieve Substantial Completion of the Project by the Scheduled Completion Date or fails to achieve completion of a Milestone as such dates may be extended in accordance with the Project Manual, agree that in addition to all other damages to which Authority may be entitled, Contractor agrees to pay to Authority as liquidated damages, and not as a penalty but as a reasonable estimate of the amount of damages Authority will suffer, the amount of Five Thousand Dollars ($5000.00) per day for each calendar day occurring after the completion date of a Milestone during which Contractor fails to achieve Substantial Completion for each such Milestone. The Parties further acknowledge and agree that this liquidated damages provision shall be Authority's only remedy for damages caused by Contractor's failure to achieve Substantial Compliance by the Scheduled Completion Date or the Milestones as such dates may be extended in accordance with the Project Manual.

K. Additional Remedies: The Parties also acknowledge and agree that Authority is entitled to any and all legal and equitable remedies Authority may have where Authority's damages are caused by any

other reason than Contractor's failure to achieve Substantial Compliance by the Scheduled Completion Date or the Milestones.

1.39 AUDIT AND ACCESS TO RECORDS

A. Contractor shall maintain all books, records, documents, and other evidence directly pertinent to the performance of the work under this Contract in accordance with generally accepted accounting principles and practices consistently applied. Contractor shall also maintain all financial information and data used by the Contractor in the preparation or support of any cost submission, including the Contractor's original bid required for this Contract, or any Change Order, claim, or other request for any adjustment, and a copy of the cost summary or information submitted to the Authority. The Project Manager or the Fire Chief shall have access upon twenty-four hours advanced written notice, at all times during normal business hours, to all such books, records, documents, financial information, and all other evidence for the purpose of inspection, audit, and copying. The Contractor shall, at no cost to the Authority, provide proper facilities for such access, inspection, and copying purposes.

B. The Parties agree that the provisions of this Section 1.39 of the Contract are applicable to Project Manual and all Change Orders, claims, and any other request for adjustment affecting the time or price of this Contract. The Contractor agrees to include the provisions of this Section in all Subcontracts and purchase orders, at any tier, and make this Article applicable to all Change Orders, claims, and other requests for adjustment related to Project performance by Contractor's Subcontractors and suppliers.

C. Audits conducted under this Section shall be in accordance with generally accepted auditing standards and established procedures and guidelines.

D. The Contractor agrees to the disclosure of all information and reports resulting from access to records under the provisions of this Section to the Authority, the Fire Chief, the Project Manager, and any affected or interested state or local agency.

E. Records under the provisions of this Section shall be maintained and made available during the performance of the Work under this Contract until three years past final payment and until final settlement of all disputes, claims, or litigation, whichever occurs later. In addition, those records which relate to any portion of this Contract to any Change Order, dispute, litigation, settlement of any claim arising out of such performance, or to the cost of items to which an audit exception has been taken, shall be maintained and made available until final payment or final resolution of such dispute, litigation, claim, or exception, whichever occurs later.

F. These rights to access provisions as provided in this Section apply to all financial records pertaining to this Contract and all Change Orders and claims. In addition, this right to access applies to all records pertaining to all contracts, Change Orders, and any amendments to this Contract: (1) To the extent the records pertain directly to Contract performance; (2) If there is any indication that fraud, gross abuse, or corrupt practices may be involved; or (3) If the Contract is terminated for default or convenience.

G. Access to records is not limited to the required retention periods. The Fire Chief shall have access to records at any reasonable time for as long as the records are maintained.

1.40 AUTHORITY OFFICERS AND EMPLOYEES; NON-DISCRIMINATION

A. No member, officer, member of the Authority Board of Directors, or employee of the Authority shall be personally liable to Contractor, or any successor in interest, in the event of any default or breach by Authority or for any amount which may become due to Contractor or to its successor, or for breach of any obligation of the terms of this Contract.

B. Pursuant to the provisions of the Authority's conflict of interest code, the Political Reform Act as set forth in Government Code Section 81000 *et seq.*, and/or the prohibition against self-dealing in contracts as set forth in Government Code Section 1090 *et. seq.*, the Parties acknowledge that no officer or employee of the Authority, or any member of the Authority Board, shall have any personal

interest, direct or indirect, in this Contract or any Subcontract under the Contract, nor shall any such officer, employee, or member of the Authority Board participate in any decision relating to the Contract which effects his or her personal interest or the interest of any corporation, partnership, or association in which he or she is, directly or indirectly, interested. In the furtherance of such acknowledgement, Contractor:

1. Contractor agrees that no officer, employee, member of the Authority Board of Directors, agent, or assignee of the Authority having direct or indirect control of any monies allocated by Authority to finance this Project, shall serve as an officer, director, employee, or agent of Contractor, or as a officer, director, employee, or agent of any Subcontractor of supplier of Contractor under this Contract.

2. In addition, any conflict or potential conflict of interest of any officer, director, employee, or agent of Contractor or any Subcontractor or supplier of Contractor has been fully disclosed to the Authority prior to execution of this Contract and such disclosure shall be deemed a part of this Contract.

C. Contractor shall not expend any funds for the purpose of influencing or attempting to influence an officer, member, employee, or member of the Authority Board in the connection with the awarding and the administration of this Contract or any subcontract in furtherance of the Project.

1.41 ENTIRE AGREEMENT

A. It is agreed that this Contract represents the entire agreement. It is further agreed that the Project Manual is incorporated in this Contract by this reference, with the same force and effect as if the same were set forth at length within the Contract, and that Contractor and Contractor's officers, employees, agents, trades, material suppliers, and Subcontractors will be and are bound by any and all of said Project Manual insofar as they relate in any part or in any way, directly or indirectly, to the work covered by this Contract.

1.42 WRITTEN NOTICE

A. Any written notice required to be given in any part of the Contract Documents shall be performed by depositing the same in the U.S. Mails, postage prepaid, directed to the address of the Contractor as set forth in the Contract Documents, and to the Authority addressed as follows:

Authority:

Property Management Section
Support Services Department
Orange County Fire Authority
1 Fire Authority Road, Irvine, CA 92602

Contractor:

_____

_____

_____

1.43 MISCELLANEOUS PROVISIONS

A. Assignment: Contractor shall neither delegate its duties or obligations, nor assign its rights with respect to this Contract, either in whole or in part. Any such attempted delegation and/or assignment shall be void and deemed void at such occurrence, if it were to occur.

B. Computation of Time: When any period of time is referred to in the Project Manual by days, it shall be computed to exclude the first and include the last day of the period, provided, however, that if the last day of the period falls on a Saturday, Sunday, or legal holiday, that day shall be omitted from the computation.

C. Interest: Any monies not paid when due to either party under this Contract shall bear interest at the rate of ten (10%) percent per annum, commencing on the forty-sixth (46th) day after demand for payment thereof after such monies are lawfully due and payable, except as otherwise provided in the Project Manual.

D. Remedies Cumulative: No remedy herein reserved to Authority is intended to be exclusive of any other remedy, but each and every such remedy shall be cumulative and shall be in addition to any other given in the Project Manual as now or hereafter existing or at law, equity, or by statute.

E. Nonwaiver: The failure of the Authority to notify the Contractor of any default under the Project Manual shall not be deemed to be a waiver by Authority of any continuing default by Contractor of any term, covenant, or condition set forth in this Contract, nor of the Authority's right to declare a default for any such continuing breach, and the failure of Authority to insist upon strict performance of any of the terms, covenants, or conditions of the Project Manual, or to exercise any option in the Project Manual in any one or more instances, shall not be construed as a waiver or relinquishment of any such terms, covenants, conditions or options, but the same shall be and remain in full force and effect.

F. Severability: In case any one or more provisions set forth in the Project Manual shall for any reason be held invalid, illegal, or unenforceable in any respect, any such invalidity, illegality, or unenforceability shall not affect any other provision of the Project Manual, and the Project Manual and this Contract shall be construed as if such invalid, illegal, or unenforceable provision had never been incorporated therein so long as the deletion of such provision does not, in the Authority's judgment, materially alter this Contract.

G. No Third Party Beneficiaries: The Project Manual and this Contract are not intended and shall not be deemed or construed, to confer any rights, powers, or privileges on any person, firm, partnership, corporation, or other entity not a party to this Contract except as may be expressly provided in the Contract to the contrary.

H. Oral Agreements: No oral order, objection, claim, or notice by any party to the other shall affect or modify any of the terms or obligations contained in this Contract or the Project Manual, and none of the provisions of the Project Manual shall be held to be waived or modified by reason of any act whatsoever, other than by a definitely agreed waiver or Modification in writing and executed in the manner required in this Contract by authorized officers or representatives of the Parties. No evidence shall be introduced in any proceeding of any other waiver or modification.

I. Counterparts: This Contract may be executed in any number of counterparts, and each of such counterparts for all purposes shall be deemed to be an original, and all of such counterparts should constitute one and the same agreement.

J. Governing Law: The Contract, including the Project Manual, shall be governed by the laws of the State of California.

K. Services Prior to Execution: Notwithstanding the fact that this Contract is executed as of the date first set forth above, the Parties recognize that a portion of the Work required under the Project Manual may have been performed prior to such date, all of which Work shall be governed by the terms and conditions of this Contract and shall be deemed to be a part of the Work. Without limiting the foregoing, all of Contractor's liabilities and obligations to Authority under the Project Manual

shall apply to all Work and services provided by the Contractor for the Work prior hereto, notwithstanding the fact that the Work may have been performed prior to the date hereof pursuant to prior negotiations, representations, agreements, understandings, or otherwise.

L. Survival of Rights: Any indemnity, warranty, guarantee given by the Contractor to the Authority under this Contract shall survive the expiration or termination of this Contract and shall be binding upon Contractor until any action under this Contract is barred by the applicable statute of limitations.

K. Notice: All notices (whether or not designated as such herein) which are required under this Contract to be given between the parties pursuant to this Paragraph shall be in writing and deemed given and, unless otherwise provided herein, effective when delivered personally to an officer of the party to be served (including the Contractor's Project Manager, in the case of the Contractor), when deposited in the United States mail, or in a sealed envelope, with postage thereon prepaid, sent by registered or certified mail, return receipt requested, and addressed to the appropriate party at the address set forth in the Contract or such other address as may be designated by either party hereto by notice to the other, or when transmitted by wire or facsimile to the appropriate party at the aforesaid address (a complimentary confirming letter shall also be mailed to the appropriate party on the same date).

L. Maintenance of Harmonious Relations: The Contractor is hereby advised that any portion of the Project, or other projects in proximity to the Project may be subject to, and governed by, certain union or trade agreements. It is the policy of Authority to promote and maintain harmonious relationships in connection with the Project. The Contractor and its Subcontractors and Sub-subcontractors shall follow this policy; and shall utilize only qualified persons or organizations in the performance of the Work. A qualified person or organization is one: which is not likely to promote labor unrest on the Project; which shall abide by all local, state and federal labor and employment relation rules, regulations and laws; whose financial stability is reasonably assured throughout the duration of the Contract; and whose commitments to other projects are not likely to interfere with its ability to perform its portion of the Work efficiently and cost effectively. Authority reserves the right to disapprove, or to require the removal of, any person or organization who is being considered for, or has received, an award to perform all or a portion of the Work but has failed to demonstrate the willingness or ability to follow this policy.

M. Union Agreements: Regardless of the expiration of any collective bargaining agreement during the term of this Contract which may affect the Contractor in any of its activities including, without limitation, with respect to the Work or the Project, the Contractor is obligated to man the job and properly and timely perform the Work in a diligent manner. Upon notification of expected or actual labor disputes or job disruption arising out of any such collective bargaining negotiations, the expiration of any union or trade agreement or any other cause, the Contractor and its Subcontractors and Sub-subcontractors shall cooperate with Authority concerning any legal, practical or contractual actions to be taken by Authority in response thereto and shall perform any actions requested by Authority to eliminate, neutralize or mitigate the affects of such actions on the progress of the Work and the impact of such actions on the public access to Authority's facilities. It is the Contractor's obligation, at the Contractor's own cost and expense, to take all steps available to prevent any persons performing the work from engaging in any disruptive activities such as strikes, picketing, slowdowns, job actions or work stoppages of any nature or ceasing to work due to picketing or other such activities, which steps shall include, without limitation, execution of an appropriate project agreement with appropriate unions prohibiting all such activities on or about the Project. Notwithstanding any such occurrences, the Contractor shall not be relieved of its obligation to man the job and properly and timely perform the Work in a diligent manner.

N. Immigration Reform Control Act: All Contractors, Subcontractors, and Sub-subcontractors must adhere to the Immigration Reform Control Act of 1986 and shall maintain I-9 forms regarding all employees. It is not Authority's obligation to insure compliance with this law, however, Authority reserves the right to inspect and copy the Contractor's records in this regard upon request.

N. General: The captions of divisions, sections, articles, Paragraphs, Subparagraphs, clauses and the like in the Project Manual are for convenience only and shall in no way define the content or limit the meaning or construction of the wording of the divisions, sections, articles, Paragraphs,

Subparagraphs, clauses and the like. The parties agree that the Project Manual shall not be construed more strictly against any party regardless of the identity of their drafter.

O. Unless otherwise specified, article, Paragraph and Subparagraph references appearing in these General Conditions are to articles, Paragraphs and Subparagraphs herein.

1.44 EMERGENCIES

A. In any emergency affecting the safety of persons or property, or in the event of a claimed violation of any Federal or State safety or health law or regulation, arising out of or in any way connected with the Work or its performance, the Contractor shall act immediately to prevent threatened damage, injury or loss or to remedy said violation, whichever is applicable, failing which Authority may immediately take whatever action it deems necessary including, but not limited to, suspending the Work .

B. The project will have written and posted emergency procedures. The procedures are required to be review by the Contractor and all Subcontractors and their employees during the orientation process. Periodically, they will be reviewed in the weekly Subcontractor meetings and in Contractor's sit tool box meetings.

C. The emergency procedures should include procedures for inclement weather (hurricanes, etc.) fire, chemical spill or releases, and severe accidents.

D. The procedures should include designated persons assigned to emergency functions such as providing first-aid, calling authorities, directing emergency personnel, or assuring the project is evacuated.

E. After-hour emergency numbers shall be made available.

1.45 CLEANUP

A. The Contractor shall at all times keep the Site clean and free from accumulation of waste materials or rubbish (including, without limitation, hazardous waste), caused by his performance of the Work, and shall continuously throughout performance of the Work remove and dispose of all such materials from the Site and the Project.

B. Project Manager may require the Contractor to comply with such standards, means and methods of cleanup, removal or disposal as Project Manager may make known to the Contractor. In event the Contractor fails to keep the Site clean and free from such waste or rubbish, or to comply with such standards, means and methods, Authority may take such action and offset any and all costs or expenses of whatever nature paid or incurred by Authority in undertaking such action against any sums then or thereafter due to the Contractor.

C. The Contractor shall notify Authority in advance of the generation, importation, storage, transportation or disposal, of any hazardous waste, toxic materials or contaminants of any type in connection with the Project. Contractor shall provide Project Manager with Material Safety Data Sheets (MSDS's) and the Uniform Hazardous Waste documents. The Contractor will develop and implement a written and effective Spill Control and Containment Plan.

1.46 TRENCHES AND EXCAVATIONS

A. The Contractor shall promptly, and before any of the following conditions are disturbed, notify the Project Manager, in writing, of any:

1. Material that the Contractor believes may be material that is hazardous waste, as defined in Section 25117 of the Health and Safety Code, that is required to be removed to a Class 1, Class II, or Class III disposal site in accordance with the provisions of existing law.

2. Subsurface of latent physical conditions at the Site differing from those indicated.

3. Unknown physical conditions at the Site of unusual nature, different materially from those ordinarily encountered and generally recognized as inherent in work of the character provided for in the Contract and Project Manual.

B. The Project Manager shall promptly investigate the conditions, and if the Project Manager finds that the conditions materially so differ, or do involve hazardous waste, and cause an increase or decrease in the Contractor's cost of, or the time required for, performance of any part of the work shall issue a change order, subject to the provisions of the Project Manual.

C. In the event that a dispute arises between the Project Manager and the Contractor whether the conditions materially differ, or involve hazardous waste, or cause a decrease or increase in the Contractor's cost of, or time required for, performance of any part of the Work, the Contractor shall not be excused from any scheduled completion date provided for in the Contract, but shall proceed with all work to be performed under the Contract. The Contractor shall retain any and all rights provided either by the Contract or by law which pertain to the resolution of disputes and protests between parties.

1.47 UNCOVERING AND CORRECTION OF WORK; AUTHORITY'S RIGHT TO CARRY OUT WORK

A. If any portion of the Work should be covered contrary to the instructions or request of Project Manager or the requirements of the Project Manual, the Contractor shall, if required by Project Manager, uncover such portion of the Work for Project Manager's observation and shall replace such Work all at the Contractor's expense.

B. If any portion of the Work should be covered prior to a specific request for observation or instruction by Project Manager, Project Manager may request to see such Work, and it shall be uncovered by the Contractor. If such Work is found to be in accordance with the Project Manual and without defect, the cost of uncovering and replacement shall, by appropriate Change Order, be charged to Authority. If such Work is found to be defective or not in accordance with the Project Manual, the Contractor shall bear such costs.

C. Project Manager shall have the authority to reject any portion of the Work which is defective or does not conform to the Project Manual, and the Contractor shall promptly correct all Work so rejected by Project Manager, whether observed before or after the Date of Substantial Completion and whether or not fabricated, installed or completed. In order that such corrective Work shall not interrupt or delay Contractor's Construction Schedule or the completion date of the Project, the Contractor shall perform such Work according to a schedule therefor established by Project Manager (which may provide that the same be performed on overtime, shiftwork, Saturdays, Sundays and/or holidays), utilizing in the performance thereof such manpower as is necessary to complete the corrective Work in accordance with said schedule. The Contractor shall bear all costs of correcting such

rejected Work including, without limitation, compensation for any additional architectural and engineering services made necessary thereby.

D. If, within one (1) year after the Completion of the Work (as determined by Authority) or within such longer period of time as may be prescribed by law or by the terms of any applicable warranty or guarantee required by the Project Manual, any of the Work is found to be defective or not in accordance with the Project Manual, the Contractor shall correct it promptly after receipt of written instructions to that effect from Authority unless Authority has previously given the Contractor a written acceptance of such condition.

E. The Contractor shall remove from the Site all Work which is defective or non-conforming and not corrected under the provisions of these General Conditions unless removal is waived in writing by Authority.

F. If the Contractor does not remove such uncorrected defective or non-conforming Work within a reasonable time fixed by written instructions to that effect from Project Manager, Authority may remove it and store the materials and equipment at the expense of the Contractor. If the Contractor does not pay the cost of such removal and storage within ten (10) days thereafter, Authority may, upon ten (10) additional days written notification to the Contractor, sell such materials and equipment at public or private sale and account to the Contractor for the net proceeds thereof, after deducting all the costs that should have been borne by the Contractor, including compensation for any additional architectural and engineering services and attorneys' fees made necessary thereby. If such proceeds of sale do not cover all costs which the Contractor should have borne, the difference shall be offset against any amounts then or thereafter due to the Contractor. If the amounts then or thereafter due to the Contractor are not sufficient to cover such difference, the Contractor shall, upon demand, pay the same to Authority. The obligations of the Contractor under this Subsection shall be in addition to, and not in limitation of, any obligations imposed on it by law, by any other provision of this Contract or by any warranty or guarantee under this Contract.

G. If the Contractor fails to correct any defective or non-conforming Work, Authority may correct it with its own forces or by contract with a third party contractor. In the event of a defect found after final acceptance of the Work by Authority which the Contractor is obligated to correct pursuant to Project Manual, Authority may, at its option, after giving the Contractor an opportunity to correct such defect, cause such corrective Work to be performed by others and charge the Contractor with the cost thereof. Such charge shall be due and payable by the Contractor upon demand.

H. If the Contractor defaults or neglects to carry out the Work in accordance with the Project Manual or fails to perform any provision of this Contract, and such default, neglect or non-performance shall continue for a period of 48 hours after written notification thereof from Authority (or if such default, neglect or non-performance cannot be reasonably remedied within such 48-hour period, and Contractor does not (in the sole determination of Authority) undertake in good faith the remedy of the same within said period and thereafter proceed diligently to completion), then Authority may, without prejudice to any other remedy Authority may have, make good such deficiencies; provided, however, that in the event of an emergency, as determined by Authority, no notification shall be required. Authority shall have the right to take possession of such portion of the Site as will enable it to make good such deficiencies and, in connection therewith, to utilize the materials, equipment, tools, construction equipment and machinery of the Contractor located on the Site. If Authority makes good any such deficiencies, the costs of correcting the same including, without limitation, compensation for additional architectural and engineering services made necessary by such default, neglect or non-performance, shall be offset against any amounts then or thereafter due to the Contractor. If the amounts then or thereafter due to the Contractor are not sufficient to cover such costs, then the Contractor shall, upon demand, pay the difference to Authority.

I. If Authority prefers to accept defective or non-conforming Work, it may do so instead of requiring its removal and correction, in which case an appropriate amount shall be offset against any amounts then or thereafter due to the Contractor; or, if the said appropriate amount of offset is determined after final payment (or if there is not then or thereafter due to the Contractor an amount sufficient to

cover the offset available to Authority), the Contractor shall, upon demand, pay the appropriate amount (or the difference after offset, as applicable) to Authority.

END OF DOCUMENT

AUDIOVISUAL SYSTEM ABBREVIATIONS

4S/DP	4" SQUARE BY 2-1/2" DEEP BOX
ADA	AMERICAN WITH DISABILITIES ACT
A.F.F.	ABOVE FINISH FLOOR
A.F.G.	ABOVE FINISHED GRADE
ADAx-x	AUDIO DISTRIBUTION AMPLIFIER
ACMBx-x	AUDIO COMBINER/SPLITTER
AMFMRXx-x	AM/FM BROADCAST RECEIVER
AMPx-x	AUDIO POWER AMPLIFIER
ANTx-x	ANTENNA
ANTDAx-x	ANTENNA DISTRIBUTION AMPLIFIER
AHJ	AUTHORITY HAVING JURISDICTION
ARCH	ARCHITECT
AVC	AUDIOVISUAL CONTRACTOR
AVB	AUDIO VIDEO BUS
AVBSWTx-x	AVB SWITCH
AWG	AMERICAN WIRE GAUGE
BDx-x	BLU-RAY DISK PLAYER
CBLK1-1	CONTROL BUSS BLOCK
CAMx-x	CAMERA
CATVRXx-x	CABLE TV RECEIVER BOX
CDx-x	CD PLAYER
CNTLx-x	SYSTEM CONTROLLER
BPTXx-x	BELT-PACK WIRELESS MICROPHONE TRANSMITTER
CODECx-x	VIDEO CONFERENCING CODEC
DSPx-x	DIGITAL SIGNAL PROCESSOR
DLFTx-x	LED DISPLAY LIFT
DISPx-x	LED DISPLAY
EC	ELECTRICAL CONTRACTOR
FPx-x	FLOOR PANEL
FT	FEET, MEASUREMENT
GC	GENERAL CONTRACTOR
SIGGENx-x	SIGNAL GENERATOR
GNMICx-x	GOOSE NECK MICROPHONE
GND	GROUND
HDMIDAx-x	HDMI DISTRIBUTION AMPLIFIER
HDSDIx-x	HD SDI DISTRIBUTION AMPLIFIER
HHMTXx-x	HAND HELD MICROPHONE TRANSMITTER
H., W., D., L.	HEIGHT, WIDTH, DEPTH, LENGTH
IN	INCHES, MEASUREMENT
ISOGND	ISOLATED GROUND
IBC	INTERNATIONAL BUILDING CODE
IDF	INTERMEDIATE DISTRIBUTION FRAME
IPOD	APPLE IPOD MP3 MUSIC PLAYER
J-BOX	JUNCTION BOX
LVCx-x	LOW VOLTAGE SCREEN MOTOR CONTROLLER
MIXx-x	AUDIO MIXER
NEC	NATIONAL ELECTRIC CODE
NEMA	NATIONAL ELECTRIC MANUFACTURERS' ASSOCIATION
N.C.	NORMALLY CLOSED
N.O.	NORMALLY OPEN
NIC	NOT IN CONTRACT
NETSWTx-x	NETWORK SWITCH
NTS	NOT TO SCALE
NO. or #	NUMBER
OFCI	OWNER FURNISHED CONTRACTOR INSTALLED
OFOI	OWNER FURNISHED OWNER INSTALLED
OFE	OWNER FURNISHED EQUIPMENT
PCx-x	PC COMPUTER
PROJx-x	PROJECTOR
PoE	POWER OVER ETHERNET
RACKx-x	EQUIPMENT RACK
RCDRx-x	RECORDER
SCNx-x	PROJECTION SCREEN
SWTx-x	SWITCHER
TPx-x	TOUCH PANEL
TYP	TYPICAL
UON	UNLESS OTHERWISE NOTED
UPSx-x	UN-INTERUPTABLE POWER SUPPLY
WAPx-x	WIRELESS ACCESS POINT
XFMRx-x	TRANSFORMER

EQUIPMENT BLOCK LEGEND

ADAx-x

- UNIT QUANTITY DESIGNATION
- UNIT TYPE NUMBER
- UNIT DESCRIPTION ABBREVIATION

GENERAL NOTES:

1. ELECTRICAL CONTRACTOR SHALL PROVIDE ALL CONDUIT. JUNCTION BOXES, CABLE TRAYS, COVER PLATES, PULL STRING, ENCLOSURES, FLOOR BOXES, POWER RECEPTACLES AND POWER CONNECTIONS IDENTIFIED IN THESE DRAWINGS AND SPECIFICATIONS.
2. ALL JUNCTION BOXES IN WALLS AND CEILINGS SHALL BE FLUSH MOUNTED. CONDUITS SHALL BE CONCEALED UNLESS OTHERWISE NOTED.
3. ALL AUDIOVISUAL CONDUIT RUNS SHALL BE CONTINUOUS FROM END TO END. NO CONDUIT RUNS SHALL EXCEED 100 FEET. ALL CONDUIT RUNS EXCEEDING 100 FEET MUST HAVE LARGE RADIUS BENDS.
4. AV CONTRACTOR SHALL PROVIDE STRUCTURAL SUPPORT FOR MOUNTING OF AUDIOVISUAL EQUIPMENT AT LOCATIONS DESIGNATED IN THESE DRAWINGS. THIS SHALL INCLUDE, BUT NOT BE LIMITED TO, BLOCKING FOR WALL MOUNTED DEVICES AND OVERHEAD SUPPORT FOR CEILING MOUNTED PROJECTORS AND PROJECTION SCREENS.
5. REFER TO AUDIOVISUAL DRAWINGS FOR SUPPORT DETAILS AND REQUIREMENTS.
6. DIMENSIONS ARE INDICATED ON AUDIOVISUAL DRAWINGS WHERE CRITICAL TO THE INSTALLATION AND PERFORMANCE OF THE AUDIOVISUAL DEVICES. WHERE INFORMATION AND REQUIREMENTS CONFLICT WITH SPECIFICATIONS AND DESIGNS DELINEATED ELSEWHERE, THE GENERAL CONTRACTOR SHALL IMMEDIATELY BRING SUCH CONFLICTS TO THE ATTENTION OF THE OWNER.
7. THE ARCHITECTURAL, FURNITURE AND FINISH CONFIGURATIONS ILLUSTRATED ON THE AUDIOVISUAL DRAWINGS ARE FOR REFERENCE ONLY. REFER TO THE ARCHITECTURAL DRAWINGS FOR SPECIFICATIONS AND REQUIREMENTS.
8. ALL EQUIPMENT INSTALLATION AND MOUNTING DETAILS PROVIDED IN THE AUDIOVISUAL DRAWINGS ARE FOR REFERENCE ONLY. REFER TO ARCHITECTURAL AND ENGINEERING AS-BUILT DRAWINGS FOR SPECIFIC REQUIREMENTS.
9. DATA/COMMUNICATION OUTLETS AND POWER OUTLETS ARE SHOWN FOR REFERENCE ONLY. REFER TO THE DRAWINGS FOR EXACT LOCATION OF THE DATA/COMMUNICATION OUTLETS AND TO THE AS-BUILT ELECTRICAL DRAWINGS FOR THE EXACT LOCATION OF THE POWER RECEPTACLES. CONTRACTOR TO VERIFY ON SITE EXACT LOCATIONS.
10. CEILING MOUNTED SPEAKER ENCLOSURES SHALL BE SUPPORTED FROM OVERHEAD STRUCTURE. DO NOT HANG SPEAKER ENCLOSURES FROM FINISHED CEILING.
11. CONTRACTOR SHALL PROVIDE PULL STRINGS IN ALL NEW CONDUIT SPECIFIED IN AUDIOVISUAL DRAWINGS. CONTRACTOR SHALL LABEL ALL AUDIOVISUAL JUNCTION BOXES WITH DESIGNATED BOX ID NUMBER (E.G., AV100).
12. CONTRACTOR SHALL PROVIDE BLANK COVER PLATES AT ALL NEW AUDIOVISUAL JUNCTION BOXES. VERIFY ALL DEVICE PLATE FINISHES WITH OWNER AND CONSULTANT. COORDINATE MOUNTING HEIGHTS AND LOCATIONS OF ALL AUDIOVISUAL JUNCTION BOXES AND DEVICES WITH OWNER AND CONSULTANT.
13. SOME JUNCTION BOXES AND ENCLOSURES SPECIFIED IN AUDIOVISUAL DRAWINGS MAY BE DEEPER THAN STANDARD WALL DEPTH. COORDINATE WITH CONSULTANT AND OWNER TO VERIFY INSTALLATION REQUIREMENTS AND DETAILING.
14. WHERE SPECIFIED, LOW VOLTAGE CONTROL INTERFACE ELECTRONICS SHALL BE PROVIDED TO ENABLE OPERATION OF LINE VOLTAGE DEVICES (E.G., PROJECTION SCREENS, LIGHTING, WINDOW COVERINGS) VIA THE AUDIOVISUAL CONTROL SYSTEM. PROVIDE SERIAL DIGITAL (E.G., RS232) INTERFACE CONTROL WHERE AVAILABLE WHERE MORE THAN ONE CONDUIT TERMINATES IN A JUNCTION BOX THE ELECTRICAL CONTRACTOR SHALL LABEL EACH CONDUIT IN A MANNER ALLOWING IDENTIFICATION OF CONDUITS AFTER WALL FINISHES ARE APPLIED.
15. AUDIOVISUAL INFRASTRUCTURE DIAGRAM IDENTIFY SIGNAL CABLE CONTAINMENT REQUIREMENTS ONLY. AUDIOVISUAL CABLING AND SPECIALTY CONNECTOR PLATES ARE BY AUDIOVISUAL CONTRACTOR.
16. ALL CONDUITS SPECIFIED SHALL BE EMT OR RIGID TYPE. FLEXIBLE CONDUITS MAY BE USED IN RUNS OF 72" OR LESS. FLEXIBLE CONDUITS SHALL NOT BE ALLOWED WHERE ACCESS CANNOT BE PROVIDED TO THE FULL LENGTH OF THE CONDUIT RUN.
17. AUDIOVISUAL CONTRACTOR TO INSTALL PROJECTION SCREEN HOUSING FOR ALL FUTURE PROJECTION SCREEN LOCATIONS. U.O.N.

ANNOTATIONS:

x / AVx.xx — DETAIL CALLOUT, "x" INDICATES DETAIL NUMBER "AVx-xx" INDICATES SHEET NUMBER.

2 — PLAN NOTE REFERENCE, REFER TO NOTES ON SHEET, OR AS DIRECTED.

1 — REVISION REFERENCE.

AUDIOVISUAL SYSTEM SYMBOLS

AP — ACOUSTIC ABSORPTION PANEL. COMPRESSED MINERAL FIBER FABRIC WRAPED.

HSB — AUDIOVISUAL SYSTEM CONDUIT COLLECTOR BOX. VERIFY SIZE AND HEIGHT WITH CONDUIT RISER DIAGRAM.

MC — AUDIOVISUAL MICROPHONE OUTLET, FLUSH CEILING MOUNTED.

HMC — AUDIOVISUAL MICROPHONE OUTLET, FLUSH WALL MOUNTED, VERIFY SIZE AND HEIGHT WITH AV DRAWINGS.

HS — AUDIOVISUAL SPEAKER, SURFACE WALL MOUNTED SPEAKER, VERIFY HEIGHT WITH AV DRAWINGS.

S — AUDIOVISUAL CEILING FLUSH MOUNTED SPEAKER.

HVC — AUDIOVISUAL VOLUME CONTROL.

HCM — AUDIOVISUAL CAMERA, WALL MOUNTED, VERIFY HEIGHT WITH AV DRAWINGS.

HAN — AUDIOVISUAL ANTENNA, WALL MOUNTED, VERIFY HEIGHT WITH AV DRAWINGS.

HALS — AUDIOVISUAL ASSISTIVE LISTENING IR EMITTER, WALL MOUNTED, VERIFY HEIGHT WITH AV DRAWINGS.

HSCN — AUDIOVISUAL PROJECTION SCREEN LOW VOLTAGE SWITCH, WALL MOUNTED.

HKP — AUDIOVISUAL KEYPAD CONTROL SYSTEM INTERFACE, WALL MOUNTED, VERIFY HEIGHT WITH AV DRAWINGS.

HTP — AUDIOVISUAL TOUCH PANEL CONTROL SYSTEM INTERFACE, WALL MOUNTED, VERIFY HEIGHT WITH AV DRAWINGS.

EXISTING AV EQUIPMENT RACKS, TO BE RE-USED

AUDIO PRESS FEED, DUAL XLR, LOOPED OUTPUTS

AUX/CAM HDMI INPUT XTP TX PLATE

ALS IR EMITTER, 1-1 NEW, 1-2 IS EXISTING

TABLE TOP TOUCH CONTROL PANEL

DCS1-X = DELEGATE MICROPHONE STATION

DISP1-X = 20" LED DISPLAY, SET INTO EXISTING OPENING IN DAIS TOP

DISP2-X = 55" LED DISPLAY, WALL MOUNTED BEHIND DAIS FOR VOTING SYSTEM RESULTS

MIP — MICROPHONE INPUT PLATE, EXISTING

MIP — AV MEDIA INPUT PLATE (MIP) TX, NEW

WALL/CEILING MOUNTED PTZ CAMERA, NEW

CEILING MOUNTED PROJECTOR, NEW

DRAWING LIST:

AV-001	LEGEND AND SYMBOLS
AV-100	BUILDING-A, BOARDROOM AV FLOOR PLAN
AV-101	BUILDING-A, TRAINING AE117, AV FLOOR PLAN
AV-102	BUILDING-A, MULTIPURPOSE AE153 & AE154 AV FLOOR PLAN
AV-103	BUILDING-D, TRAINING D106 & D107 AV FLOOR PLAN
AV-200	BUILDING-A, BOARDROOM AV CEILING PLAN
AV-201	BUILDING-A, TRAINING AE117, AV CEILING PLAN
AV-202	BUILDING-A, MULTIPURPOSE AE153 & AE154 AV CEILING PLAN
AV-203	BUILDING-D, TRAINING D106 & D107 AV CEILING PLAN
AV-401	AUDIOVISUAL SYSTEM DRAWING
AV-401.1	AUDIOVISUAL SYSTEM DRAWING
AV-402	AUDIOVISUAL SYSTEM DRAWING
AV-402.1	AUDIOVISUAL SYSTEM DRAWING
AV-403	AUDIOVISUAL SYSTEM DRAWING
AV-404	AUDIOVISUAL SYSTEM DRAWING
AV-405	AUDIOVISUAL SYSTEM DRAWING
AV-405.1	AUDIOVISUAL SYSTEM DRAWING
AV-405.2	AUDIOVISUAL SYSTEM DRAWING
AV-406	AUDIOVISUAL SYSTEM DRAWING
AV-601	DETIALS

ENGINEER

tk1sc COLLABORATIVE
15231 Laguna Canyon Road, Suite 100
Irvine, California 92618
949.751.5800 www.tk1sc.com
(Project Manager- Scott Tonelson)
tk1sc Job #: 2015-0490

This and all other project documents and all ideas, aesthetics and designs incorporated therein are instruments of service. All project documents are the registered property of tk1sc and cannot be lawfully used in whole or in part for any project or purpose except as described in the contractual agreement between tk1sc and Client. tk1sc hereby gives formal notice that any such project document use, reproduction or modification (misuse) is not only unlawful but automatically binds all parties involved with misuse to fully indemnify and defend tk1sc and tk1sc's Consultants to the maximum legal extent against all losses, demands, claims or liabilities arising directly or indirectly from project document misuse.

Project documents describe design intent of work and are not a representation of as-built or existing conditions. tk1sc and tk1sc's Consultants make no representations concerning the accuracy of documents and are not responsible for any discrepancies between project documents and the existing conditions.

© Copyright 2016

PROJECT

ORANGE COUNTY FIRE AUTHORITY

ONE FIRE AUTHORITY ROAD
IRVINE, CA 92602

ENGINEER'S STAMP

REVISION INFORMATION

REV.	DESCRIPTION	DATE

DATE 01-05-16 DRAWN BY JS

SCALE N.T.S. CHECKED BY SKT

DRAWING TITLE

AUDIOVISUAL SYSTEMS LEGEND AND SYMBOLS

DRAWING No.

AV-001

PLAN NOTES:

NOTE: ALL CONDUITS ARE EXISTING, EXISTING CABLING WILL NEED TO BE REMOVED WHERE REQUIRED AND NOTED IN SPECIFICATION.

1. 20" LED DISPLAY WITH ADJUSTABLE STAND, LOCATED IN EXISTING OPENINGS IN DAIS TOP
2. DELEGATE CONFERENCE STATION (DCSX-X) WITH MICROPHONE
3. FLOOR BOX 1 WITH EXISTING MICROPHONE INPUT PLATE
4. FLOOR BOX 2 WITH NEW XTP DECORA TRANSMITTER INPUT PLATE
5. CAM1 – MOUNTED PTZ CAMERA, #3 RIGHT SIDE HAS EXISTING CONDUIT AND IN-WALL BOX, #4 LEFT SIDE IS A NEW CAMERA, IT WILL REQUIRE NEW INFRASTRUCTURE 4S BOX WITH 1G RING
6. THREE LED DISPLAYS (2 – 20", 1– 22") MOUNTED ON TRIPLE MOUNT DESK STAND/CLAMP
7. 10" TABLE TOP CONTROL PANEL, POWER OVER CAT6 CABLE
8. 12" TABLE TOP CONTROL PANEL, LOCAL POWER
9. WIRED GOOSENECK MICROPHONE, EXISTING
10. NEW 4S BOX WITH 1G RING, AND 1" CONDUIT INTO ACCESSIBLE CEILING SPACE IN AV BOOTH
11. AUDIO PRESS FEED, ONE (1) XLR-M CONNECTIONS, CUSTOM PLATE, REFERENCE AV6.01 DETAIL 1.
12. (2) CUSTOM VOTING PANELS / DISPLAYS, WALL MOUNTED PORTRAIT ORIENTATION FOR VOTING RESULTS, SEE SPECIFICATIONS, PROVIDED BY AVC.
13. ALS IR EMITTER, 1–1 IS A NEW UNIT, 1–2 IS EXISTING. POWER AND AUDIO CABLING IS EXISTING TO BOTH LOCATIONS
14. EXISTING AV RACKS FOR BOARDROOM SYSTEM
15. EXISTING SPEAKER TIME CONTROL BOX
16. EXISTING SPEAKER TIME LIGHT BOX
17. ANOUNCER/TALK BACK MICROPHONE, SEE SPECIFICATIONS, PROVIDED BY AVC.
18. AV PULL BOX 2 GANG DEEP WITH 2 GANG RING AT HEIGHT INDICATED, PROVIDE (1) 1" CONDUIT STUBBED INTO ACCESSIBLE SPACE BY E.C.
19. 65" LED PROFESSIONAL DISPLAY BY AVC.
20. ADDED DATA JACK AT WALL MOUNTED PTZ CAMERA LOCATIONS FOR FUTURE.
21. HAND HELD VOTING STATION, 1 PER SEAT, TOTAL OF 30 SEATS
22. VOTING SYSTEM CONTROLLER

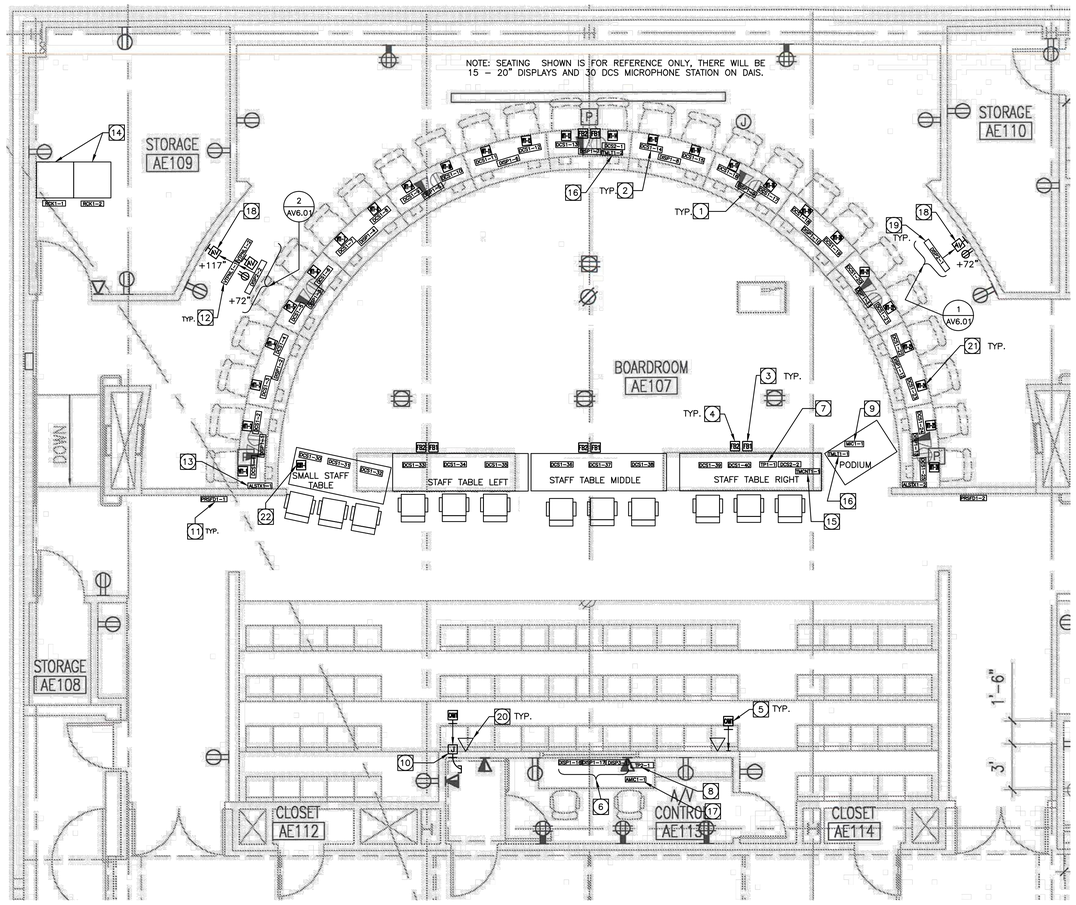

BOARDROOM AE107 AV FLOOR PLAN (1)

SCALE: NOT TO SCALE

ENGINEER

tk1sc COLLABORATIVE
15231 Laguna Canyon Road, Suite 100
Irvine, California 92618
949.751.5800 www.tk1sc.com
(Project Manager- Scott Tonelson)
tk1sc Job #: 2015-0490

This and all other project documents and all ideas, aesthetics and designs incorporated therein are instruments of service. All project documents are the registered property of tk1sc and cannot be lawfully used in whole or in part for any project or purpose except as described in the contractual agreement between tk1sc and Client. tk1sc hereby gives formal notice that any such project document use, reproduction or modification (misuse) is not only unlawful but automatically binds all parties involved with misuse to fully indemnify and defend tk1sc and tk1sc's Consultants to the maximum legal extent against all losses, demands, claims or liabilities arising directly or indirectly from project document misuse.

Project documents describe design intent of work and are not a representation of as-built or existing conditions. tk1sc and tk1sc's Consultants make no representations concerning the accuracy of documents and are not responsible for any discrepancies between project documents and the existing conditions.

© Copyright 2016

PROJECT

ORANGE COUNTY FIRE AUTHORITY

ONE FIRE AUTHORITY ROAD
IRVINE, CA 92602

ENGINEER'S STAMP

REVISION INFORMATION

REV.	DESCRIPTION	DATE

DATE 01-05-16 DRAWN BY JS
SCALE NOT TO SCALE CHECKED BY SKT

DRAWING TITLE

BUILDING A
BOARDROOM AE107
AV FLOOR PLAN

DRAWING No.

AV-100

PLAN NOTES:

NOTE: ALL CONDUITS ARE EXISTING, EXISTING CABLING WILL NEED TO BE REMOVED WHERE REQUIRED AND NOTED IN SPECIFICATION.

1. EXISTING MICROPHONE WALL PLATE, AVC TO TEST AND VERIFY.
2. MEDIA INPUT PLATE (MIP) WALL PLATE WITH NEW DTP DECORA TRANSMITTER INPUT PLATE, PROVIDED BY AVC.
3. FLOOR BOX 1 WITH EXISTING MICROPHONE INPUT PLATE, AVC TO TEST AND VERIFY.
4. FLOOR BOX 2 WITH NEW XTP DECORA MIP TRANSMITTER INPUT PLATE
5. CAM1, WALL MOUNTED PTZ CAMERA (NEW) BACK OF ROOM PROVIDED BY AVC, IN-WALL BOX EXISTING
6. TP2 – 12" TABLE TOP CONTROL PANEL, LOCAL POWER FROM FLOOR BOX, PIP VIDEO FEED OVER SEPARATE XTP/DTP CABLE CABLE, PROVIDED BY AVC.
7. EXISTING AV RACK FOR ROOM SYSTEM IN STORAGE ROOM 110.
8. EXISTING ALS IR EMITTER
9. ADDED DATA JACK AT WALL MOUNTED PTZ CAMERA LOCATIONS FOR FUTURE, NEW 1 GANG ELECTRICAL BOX AND 3/4" CONDUIT STUBBED INTO ACCESSABLE CEILING SPACE REQUIRED..
10. CAM2 – USB CAMERA MOUNTED ON LCD/LED DISPLAY FOR SKYPE CONFERENCE CALLS PROVIDEDD BY AVC, A NEW 1 GANG ELECTRICAL BOX AND 3/4" CONDUIT STUBBED INTO ACCESSIBLE CEILING SPACE PROVIDED BY E.C.

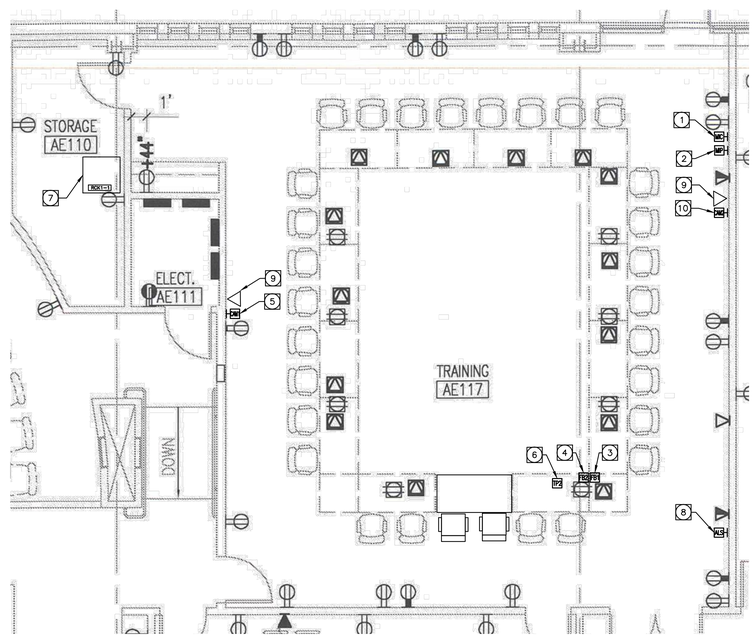

TRAINING AE117 AV FLOOR PLAN (1)

SCALE: NOT TO SCALE

ENGINEER

tk1sc COLLABORATIVE
15231 Laguna Canyon Road, Suite 100
Irvine, California 92618
949.751.5800 www.tk1sc.com
(Project Manager- Scott Tonelson)
tk1sc Job #: 2015-0490

This and all other project documents and all ideas, aesthetics and designs incorporated therein are instruments of service. All project documents are the registered property of tk1sc and cannot be lawfully used in whole or in part for any project or purpose except as described in the contractual agreement between tk1sc and Client. tk1sc hereby gives formal notice that any such project document use, reproduction or modification (misuse) is not only unlawful but automatically binds all parties involved with misuse to fully indemnify and defend tk1sc and tk1sc's Consultants to the maximum legal extent against all losses, demands, claims or liabilities arising directly or indirectly from project document misuse.

Project documents describe design intent of work and are not a representation of as-built or existing conditions. tk1sc and tk1sc's Consultants make no representations concerning the accuracy of documents and are not responsible for any discrepancies between project documents and the existing conditions.

© Copyright 2016

PROJECT

ORANGE COUNTY FIRE AUTHORITY

ONE FIRE AUTHORITY ROAD
IRVINE, CA 92602

ENGINEER'S STAMP

REVISION INFORMATION

REV.	DESCRIPTION	DATE

DATE 01-05-16 DRAWN BY JS
SCALE NOT TO SCALE CHECKED BY SKT

DRAWING TITLE

BUILDING A
TRAINING AE-117
AV FLOOR PLAN

DRAWING No.

AV-101

PLAN NOTES:

NOTE: ALL CONDUITS ARE EXISTING, EXISTING CABLING WILL NEED TO BE REMOVED WHERE REQUIRED AND NOTED IN SPECIFICATION.

1. FLOOR BOX 1 WITH EXISTING MICROPHONE INPUT PLATE
2. FLOOR BOX 2 WITH NEW XTP DECORA MIP TRANSMITTER INPUT PLATE
3. EXISTING ALS EMITTER
4. TP2 – 12" TABLE TOP CONTROL PANEL, LOCAL POWER FROM FLOOR BOX, PIP VIDEO FEED OVER SEPARATE XTP/DTP CABLE CABLE, PROVIDED BY AVC.
5. EXISTING AV ½ RACK FOR CLASSROOM SYSTEM IN MILLWORK BEHIND PODIUM
6. EXISTING WALL MOUNTED LCD/LED DISPLAY,
7. EXISTING PODIUM WITH OFE PC INSTALLED
8. CAM2 – USB CAMERA MOUNTED ON LCD/LED DISPLAY FOR SKYPE CONFERENCE CALLS, PROVIDED BY AVC, A NEW 1 GANG ELECTRICAL BOX AND 3/4" CONDUIT STUBBED INTO ACCESSIBLE CEILING SPACE PROVIDED BY E.C..
9. ADDED DATA JACK AT WALL MOUNTED PTZ CAMERA LOCATIONS FOR FUTURE, A NEW 1 GANG ELECTRICAL BOX AND 3/4" CONDUIT STUBBED INTO ACCESSIBLE CEILING SPACE PROVIDED BY E.C..

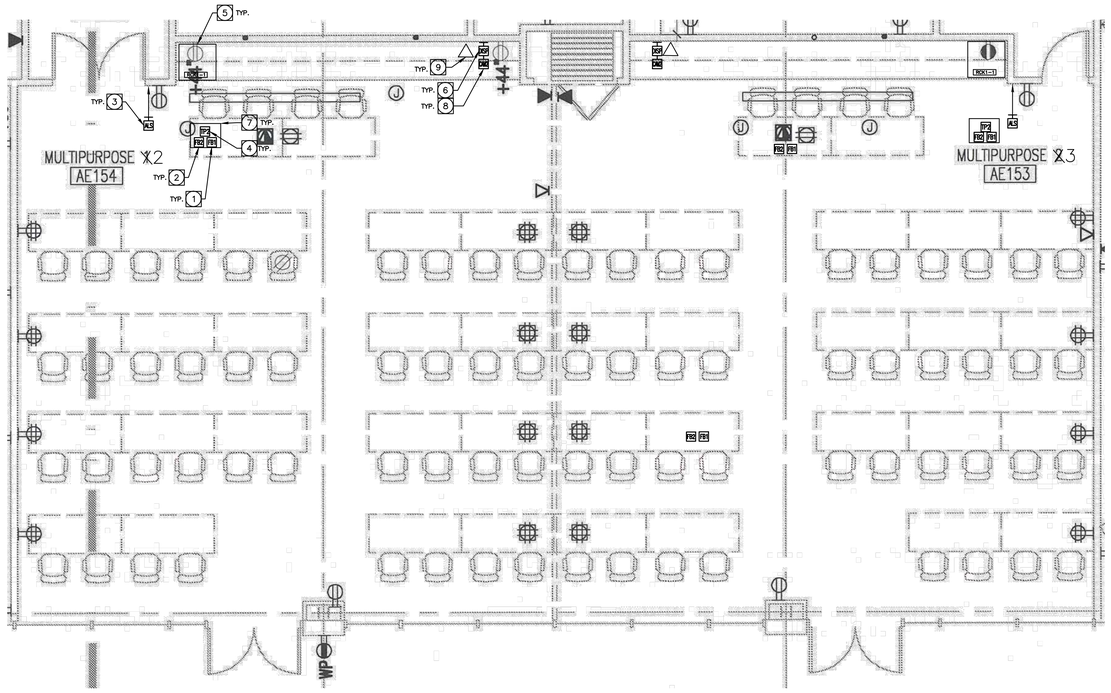

MULTIPURPOSE AE153 & AE154 AV FLOOR PLAN (1)

SCALE: NOT TO SCALE

ENGINEER

tk1sc COLLABORATIVE
15231 Laguna Canyon Road, Suite 100
Irvine, California 92618
949.751.5800 www.tk1sc.com
(Project Manager- Scott Tonelson)
tk1sc Job #: 2015-0490

This and all other project documents and all ideas, aesthetics and designs incorporated therein are instruments of service. All project documents are the registered property of tk1sc and cannot be lawfully used in whole or in part for any project or purpose except as described in the contractual agreement between tk1sc and Client. tk1sc hereby gives formal notice that any such project document use, reproduction or modification (misuse) is not only unlawful but automatically binds all parties involved with misuse to fully indemnify and defend tk1sc and tk1sc's Consultants to the maximum legal extent against all losses, demands, claims or liabilities arising directly or indirectly from project document misuse.

Project documents describe design intent of work and are not a representation of as-built or existing conditions. tk1sc and tk1sc's Consultants make no representations concerning the accuracy of documents and are not responsible for any discrepancies between project documents and the existing conditions.

© Copyright 2016

PROJECT

ORANGE COUNTY FIRE AUTHORITY

ONE FIRE AUTHORITY ROAD
IRVINE, CA 92602

ENGINEER'S STAMP

REVISION INFORMATION

REV.	DESCRIPTION	DATE

DATE 01-05-16 DRAWN BY JS
SCALE NOT TO SCALE CHECKED BY SKT

DRAWING TITLE

BUILDING A
MULTIPURPOSE
AE153 & AE154
AV FLOOR PLAN

DRAWING No.

AV-102

PLAN NOTES:

NOTE: ALL CONDUITS ARE EXISTING, EXISTING CABLING WILL NEED TO BE REMOVED WHERE REQUIRED AND NOTED IN SPECIFICATION.

1. FLOOR BOX 1 WITH EXISTING MICROPHONE INPUT PLATE
2. FLOOR BOX 2 WITH NEW XTP DECORA MIP TRANSMITTER INPUT PLATE
3. NEW ALS EMITTER, MOUNTED ABOVE 80" A.F.F
4. TP2 – 12" TABLE TOP CONTROL PANEL, LOCAL POWER FROM FLOOR BOX, PIP VIDEO FEED OVER SEPARATE XTP/DTP CABLE CABLE, PROVIDED BY AVC.
5. EXISTING AV ½ RACKS IN THE MILLWORK AT THE BACK OF THE CLASSROOM
6. EXISTING WALL MOUNTED LCD/LED DISPLAY.
7. EXISTING WALL MOUNTED SPEAKERS.
8. EXISTING PODIUM WITH OFE PC INSTALLED
9. CAM2 – USB CAMERA MOUNTED ON LCD/LED DISPLAY FOR SKYPE CONFERENCE CALLS, PROVIDED BY AVC. A NEW 1 GANG ELECTRICAL BOX AND 3/4" CONDUIT STUBBED INTO ACCESSIBLE CEILING SPACE PROVIDED BY E.C.
10. ADDED DATA JACK AT WALL MOUNTED PTZ CAMERA LOCATIONS FOR FUTURE. A NEW 1 GANG ELECTRICAL BOX AND 3/4" CONDUIT STUBBED INTO ACCESSIBLE CEILING SPACE PROVIDED BY E.C.

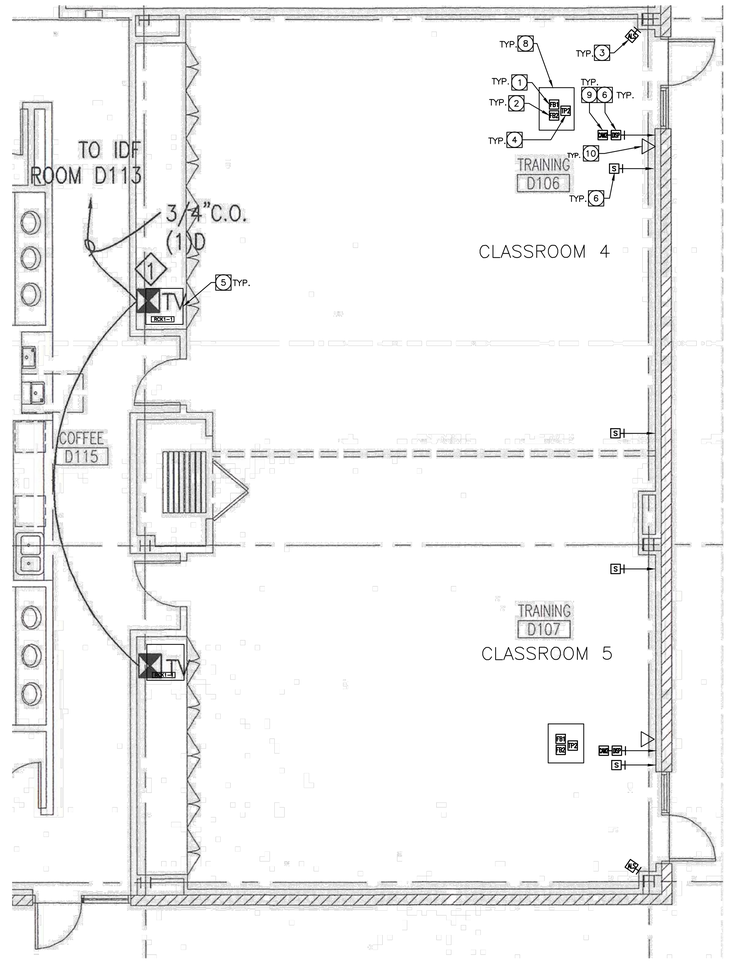

TRAINING D106 & D107 AV FLOOR PLAN (1)

SCALE: NOT TO SCALE

ENGINEER

tk1sc COLLABORATIVE
15231 Laguna Canyon Road, Suite 100
Irvine, California 92618
949.751.5800 www.tk1sc.com
(Project Manager- Scott Tonelson)
tk1sc Job #: 2015-0490

This and all other project documents and all ideas, aesthetics and designs incorporated therein are instruments of service. All project documents are the registered property of tk1sc and cannot be lawfully used in whole or in part for any project or purpose except as described in the contractual agreement between tk1sc and Client. tk1sc hereby gives formal notice that any such project document use, reproduction or modification (misuse) is not only unlawful but automatically binds all parties involved with misuse to fully indemnify and defend tk1sc and tk1sc's Consultants to the maximum legal extent against all losses, demands, claims or liabilities arising directly or indirectly from project document misuse.

Project documents describe design intent of work and are not a representation of as-built or existing conditions. tk1sc and tk1sc's Consultants make no representations concerning the accuracy of documents and are not responsible for any discrepancies between project documents and the existing conditions.

© Copyright 2016

PROJECT

ORANGE COUNTY FIRE AUTHORITY

ONE FIRE AUTHORITY ROAD
IRVINE, CA 92602

ENGINEER'S STAMP

REVISION INFORMATION

REV.	DESCRIPTION	DATE

DATE 01-05-16 DRAWN BY JS
SCALE NOT TO SCALE CHECKED BY SKT

DRAWING TITLE

BUILDING D
TRAINING
D106 & D107
AV FLOOR PLAN

DRAWING No.

AV-103

PLAN NOTES:

NOTE: ALL CONDUITS ARE EXISTING, EXISTING CABLING WILL NEED TO BE REMOVED WHERE REQUIRED AND NOTED.

1. EXISTING DRAPER SCREEN, FABRIC AND ROLLER TO BE REPLACED WITH 72-1/2" X 116 FABRIC
2. NEW ELECTRIC ROLL DOWN SCREEN WITH 50" X 80" IMAGE AREA AND 30" EXTRA BLACK DROP TO REPLACE EXISTING DRAPER SCREEN
3. NEW CEILING PROJECTOR, AT EXISTING PROJECTOR LOCATION
4. EXISTING RECESSED CEILING SPEAKERS
5. EXISTING WALL MOUNTED CABINET SPEAKER
6. CAM1 – NEW CEILING MOUNTED PTZ CAMERA, CAT6 CABLE TO BE RUN ABOVE DROP CEILING TO AV CONTROL BOOTH, CABLES TO BE HUNG ON "J" HOOKS
7. NEW WIRELESS MICROPHONE ACTIVE ANTENNAS, MOUNT ABOVE DROP TILE CEILING AT LEAST 3' APART
8. NEW 1" CONDUIT SLEEVES THROUGH WALL FOR CABLE PASS THROUGH ABOVE DROP CEILING, FIRE PROOFING REQUIRE AROUND CONDUITS AND IN CONDUITS AFTER PLENUM CABLE HAS BEEN INSTALLED
9. ADDED DATA JACK AT WALL MOUNTED PTZ CAMERA LOCATIONS FOR FUTURE.
10. NEW ACOUSTIC ABSORPTIVE MATERIAL. BY AVC..

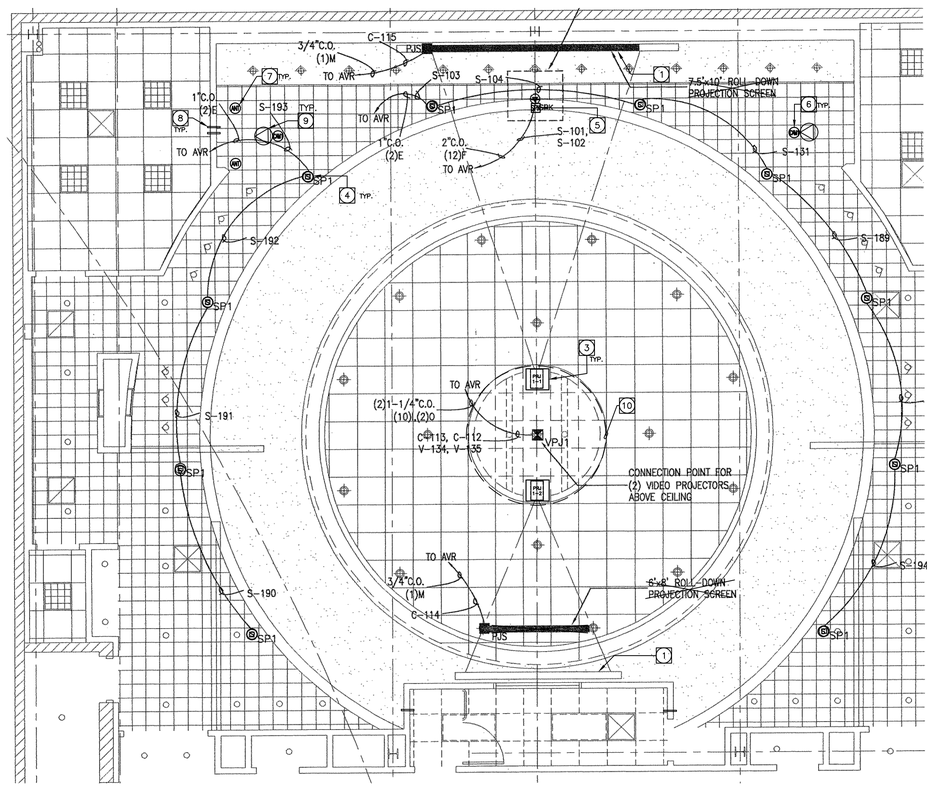

BOARDROOM AE107 AV CEILING PLAN (1)

SCALE: NOT TO SCALE

ENGINEER

tk1sc COLLABORATIVE

15231 Laguna Canyon Road, Suite 100
Irvine, California 92618
949.751.5800 www.tk1sc.com

(Project Manager- Scott Tonelson)
tk1sc Job #: 2015-0490

This and all other project documents and all ideas, aesthetics and designs incorporated therein are instruments of service. All project documents are the registered property of tk1sc and cannot be lawfully used in whole or in part for any project or purpose except as described in the contractual agreement between tk1sc and Client. tk1sc hereby gives formal notice that any such project document use, reproduction or modification (misuse) is not only unlawful but automatically binds all parties involved with misuse to fully indemnify and defend tk1sc and tk1sc's Consultants to the maximum legal extent against all losses, demands, claims or liabilities arising directly or indirectly from project document misuse.

Project documents describe design intent of work and are not a representation of as-built or existing conditions. tk1sc and tk1sc's Consultants make no representations concerning the accuracy of documents and are not responsible for any discrepancies between project documents and the existing conditions.

© Copyright 2016

PROJECT

ORANGE COUNTY FIRE AUTHORITY

ONE FIRE AUTHORITY ROAD
IRVINE, CA 92602

ENGINEER'S STAMP

REVISION INFORMATION

REV.	DESCRIPTION	DATE

DATE 01-05-16 DRAWN BY JS
SCALE NOT TO SCALE CHECKED BY SKT

DRAWING TITLE

BUILDING A
BOARDROOM AE107
AV CEILING PLAN

DRAWING No.

AV-200

PLAN NOTES:

1. EXISTING DRAPER SCREEN, 60" X 80", TO BE RE-USED.
2. NEW CEILING PROJECTOR, AT EXISTING PROJECTOR LOCATION, AV CONTRACTOR TO CONFIRM THROW DISTANCE.
3. EXISTING RECESSED CEILING SPEAKERS.
4. CEILING MICROPHONES, HANG DOWN APPROXIMATELY 8" FROM CEILING, PROVIDED BY AVC.

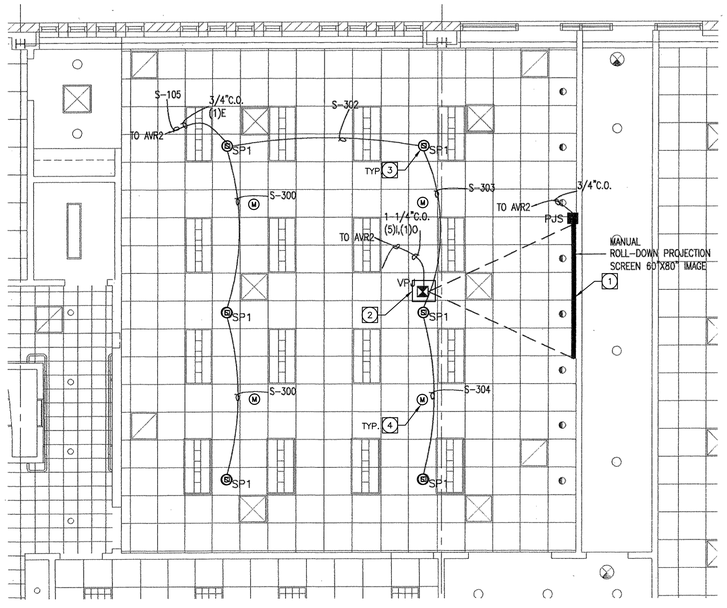

TRAINING AE117 AV CEILING PLAN (1)

SCALE: NOT TO SCALE

ENGINEER

tk1sc COLLABORATIVE
15231 Laguna Canyon Road, Suite 100
Irvine, California 92618
949.751.5800 www.tk1sc.com
(Project Manager- Scott Tonelson)
tk1sc Job #: 2015-0490

This and all other project documents and all ideas, aesthetics and designs incorporated therein are instruments of service. All project documents are the registered property of tk1sc and cannot be lawfully used in whole or in part for any project or purpose except as described in the contractual agreement between tk1sc and Client. tk1sc hereby gives formal notice that any such project document use, reproduction or modification (misuse) is not only unlawful but automatically binds all parties involved with misuse to fully indemnify and defend tk1sc and tk1sc's Consultants to the maximum legal extent against all losses, demands, claims or liabilities arising directly or indirectly from project document misuse.

Project documents describe design intent of work and are not a representation of as-built or existing conditions. tk1sc and tk1sc's Consultants make no representations concerning the accuracy of documents and are not responsible for any discrepancies between project documents and the existing conditions.

© Copyright 2016

PROJECT

ORANGE COUNTY FIRE AUTHORITY

ONE FIRE AUTHORITY ROAD
IRVINE, CA 92602

ENGINEER'S STAMP

REVISION INFORMATION

REV.	DESCRIPTION	DATE

DATE 01-05-16 DRAWN BY JS

SCALE NOT TO SCALE CHECKED BY SKT

DRAWING TITLE

BUILDING A
TRAINING AE117
AV CEILING PLAN

DRAWING No.

AV-201

PLAN NOTES:

1. EXISTING DRAPER SCREEN, 60" X 80", TO BE RE-USED
2. NEW CEILING PROJECTOR, AT EXISTING PROJECTOR LOCATION, AV CONTRACTOR TO CONFIRM THROW DISTANCE
3. EXISTING RECESSED CEILING SPEAKERS
4. NEW CEILING MOUNTED PTZ CAMERA, CAT6 CABLE TO BE RUN ABOVE DROP CEILING TO AV CONTROL BOOTH, CABLES TO BE HUNG ON "J" HOOKS
5. CEILING MICROPHONES, HANG DOWN APPROXIMATELY 8" FROM CEILING, PROVIDED BY AVC.
6. ADDED DATA JACK AT CAMERA LOCATIONS FOR FUTURE.

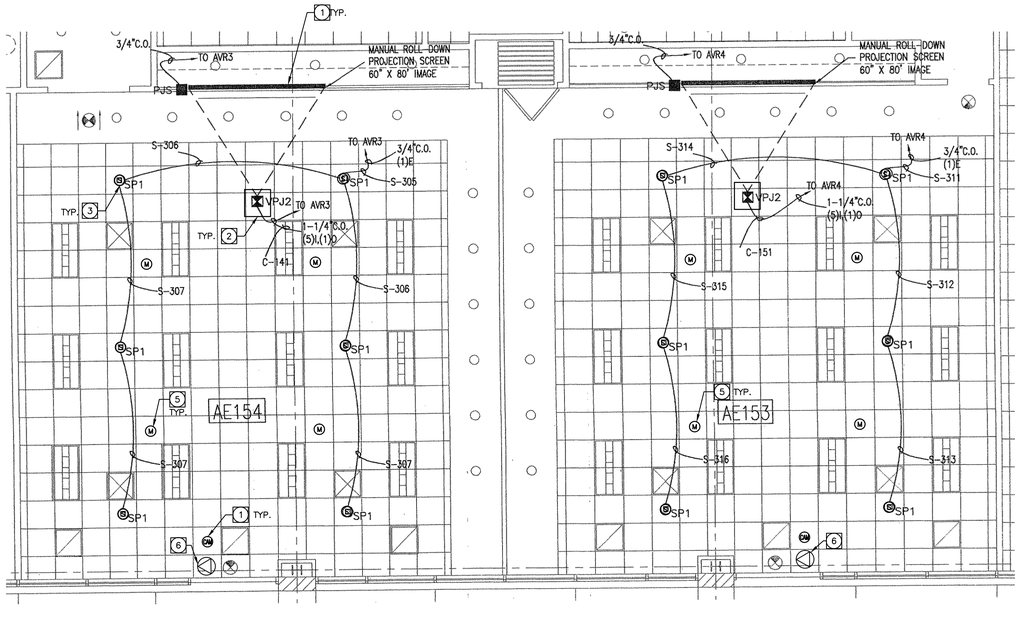

MULTIPURPOSE AE153 & AE154 AV CEILING PLAN (1)

SCALE: NOT TO SCALE

ENGINEER

tk1sc COLLABORATIVE
15231 Laguna Canyon Road, Suite 100
Irvine, California 92618
949.751.5800 www.tk1sc.com
(Project Manager- Scott Tonelson)
tk1sc Job #: 2015-0490

This and all other project documents and all ideas, aesthetics and designs incorporated therein are instruments of service. All project documents are the registered property of tk1sc and cannot be lawfully used in whole or in part for any project or purpose except as described in the contractual agreement between tk1sc and Client. tk1sc hereby gives formal notice that any such project document use, reproduction or modification (misuse) is not only unlawful but automatically binds all parties involved with misuse to fully indemnify and defend tk1sc and tk1sc's Consultants to the maximum legal extent against all losses, demands, claims or liabilities arising directly or indirectly from project document misuse.

Project documents describe design intent of work and are not a representation of as-built or existing conditions. tk1sc and tk1sc's Consultants make no representations concerning the accuracy of documents and are not responsible for any discrepancies between project documents and the existing conditions.

© Copyright 2016

PROJECT

ORANGE COUNTY FIRE AUTHORITY

ONE FIRE AUTHORITY ROAD
IRVINE, CA 92602

ENGINEER'S STAMP

REVISION INFORMATION

REV.	DESCRIPTION	DATE

DATE 01-05-16 DRAWN BY JS
SCALE NOT TO SCALE CHECKED BY SKT

DRAWING TITLE

BUILDING A MULTIPURPOSE AE153 & AE154 AV CEILING PLAN

DRAWING No.

AV-202

PLAN NOTES:

1. EXISTING DRAPER SCREEN, WITH 60" X 80" FABRIC, TO BE RE-USED
2. NEW CEILING PROJECTOR, AT EXISTING PROJECTOR LOCATION, AV CONTRACTOR TO CONFIRM THROW DISTANCE
3. NEW CEILING MOUNTED PTZ CAMERA, CAT6 CABLE TO BE RUN ABOVE DROP CEILING TO AV CONTROL BOOTH, CABLES TO BE HUNG ON "J" HOOKS
4. CEILING MICROPHONES, HANG DOWN APPROXIMATELY 8" FROM CEILING, PROVIDED BY AVC.
5. ADDED DATA JACK AT CAMERA LOCATIONS FOR FUTURE.

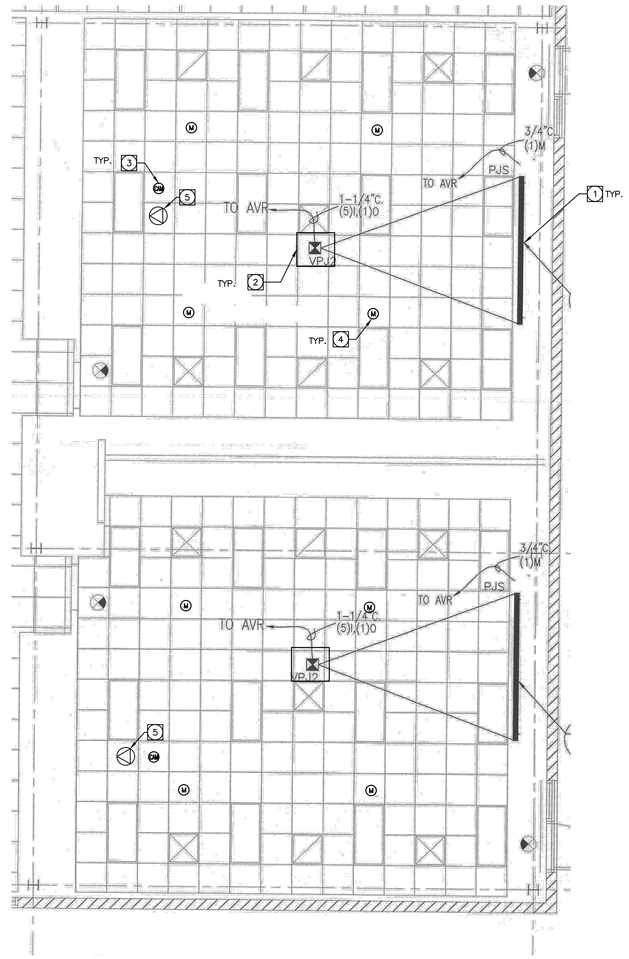

TRAINING D106 & D107 AV CEILING PLAN (1)

SCALE: NOT TO SCALE

ENGINEER

tk1sc COLLABORATIVE
15231 Laguna Canyon Road, Suite 100
Irvine, California 92618
949.751.5900 www.tk1sc.com
(Project Manager- Scott Tonelson)
tk1sc Job #: 2015-0490

This and all other project documents and all ideas, aesthetics and designs incorporated therein are instruments of service. All project documents are the registered property of tk1sc and cannot be lawfully used in whole or in part for any project or purpose except as described in the contractual agreement between tk1sc and Client. tk1sc hereby gives formal notice that any such project document use, reproduction or modification (misuse) is not only unlawful but automatically binds all parties involved with misuse to fully indemnify and defend tk1sc and tk1sc's Consultants to the maximum legal extent against all losses, demands, claims or liabilities arising directly or indirectly from project document misuse.

Project documents describe design intent of work and are not a representation of as-built or existing conditions. tk1sc and tk1sc's Consultants make no representations concerning the accuracy of documents and are not responsible for any discrepancies between project documents and the existing conditions.

© Copyright 2016

PROJECT

ORANGE COUNTY FIRE AUTHORITY

ONE FIRE AUTHORITY ROAD
IRVINE, CA 92602

ENGINEER'S STAMP

REVISION INFORMATION

REV.	DESCRIPTION	DATE

DATE 01-05-16 DRAWN BY JS
SCALE NOT TO SCALE CHECKED BY SKT

DRAWING TITLE

BUILDING D
TRAINING
AV CEILING PLAN

DRAWING No.

AV-203

PLAN NOTES:

1. CABLE, EXTRON XTP/DTP, PLENUM RATED, SHIELDED CAT-6A WITH SHIELDED CONNECTORS. SEE SPECIFICATIONS SECTION 274100.
2. CABLE, DATA, CAT-6, PLENUM RATED. SEE SPECIFICATIONS SECTION.
3. CABLE, HDMI TO HDMI, PRE-TERMINATED. SEE SPECIFICATIONS SECTION 274100.
4. CABLE, VGA & AUDIO, PRE-TERMINATED. SEE SPECIFICATIONS SECTION 274100.
5. CABLE, AUDIO, 2-22 SHIELDED, 22 AWG, STP, PLENUM RATED. SEE SPECIFICATIONS SECTION 274100.
6. CABLE, CONTROL, PLENUM RATED. SEE SPECIFICATIONS SECTION 274100.
7. CABLE, SPEAKER & RELAY, 2-16, 16-AWG, NON-SHIELDED PAIR, PLENUM RATED. SEE SPECIFICATIONS SECTION 274100.
8. CABLE, DVI-D TO HDMI, PRE-TERMINATED. SEE SPECIFICATIONS SECTION 274100.
9. EXISTING CABLES, CATV COAX, SPEAKER, MICROPHONE, VGA, RF
10. CABLE, DVI TO DVI, PRE-TERMINATED. SEE SPECIFICATIONS SECTION 274100.
11. CABLE, DVI TO VGA, PRE-TERMINATED. SEE SPECIFICATIONS SECTION 274100.
12. CABLE, USB TO USB VERIFY CONNECTOR ON DEVICES, PRE-TERMINATED. SEE SPECIFICATIONS SECTION 274100.

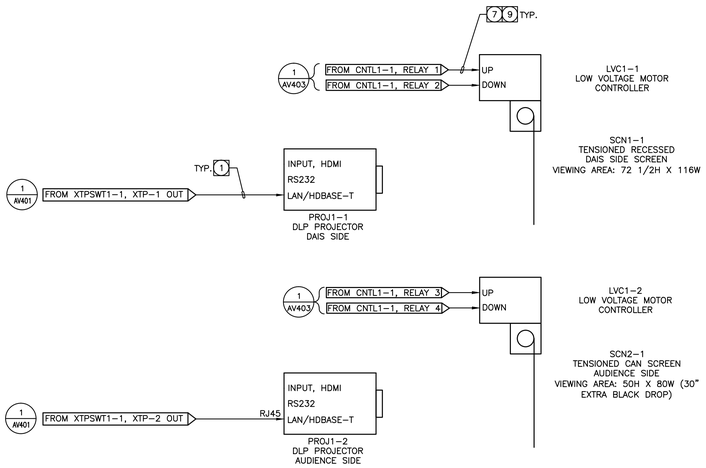

BOARDROOM PROJECTION DISPLAYS - AUDIOVISUAL SYSTEM DIAGRAM (1)

SCALE: N.T.S.

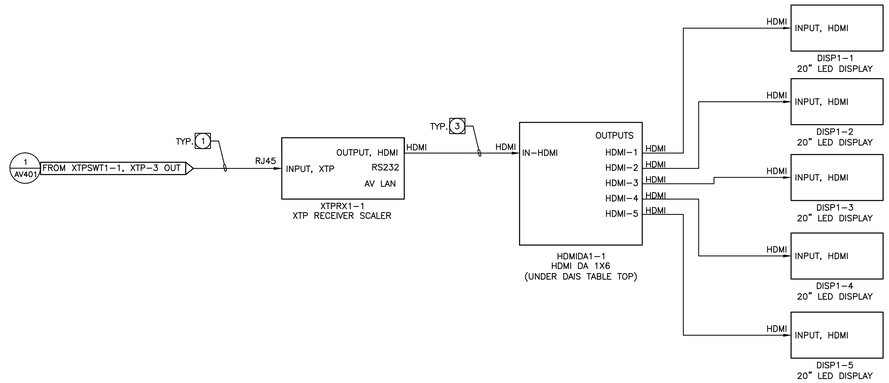

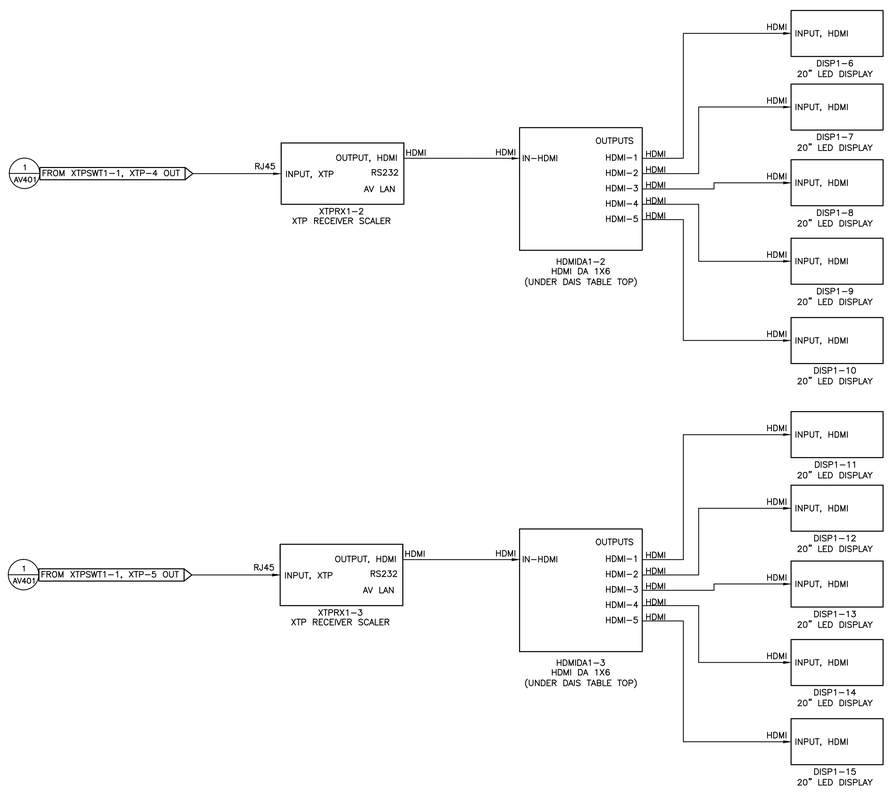

BOARDROOM DAIS DISPLAYS - AUDIOVISUAL SYSTEM DIAGRAM (2)

SCALE: N.T.S.

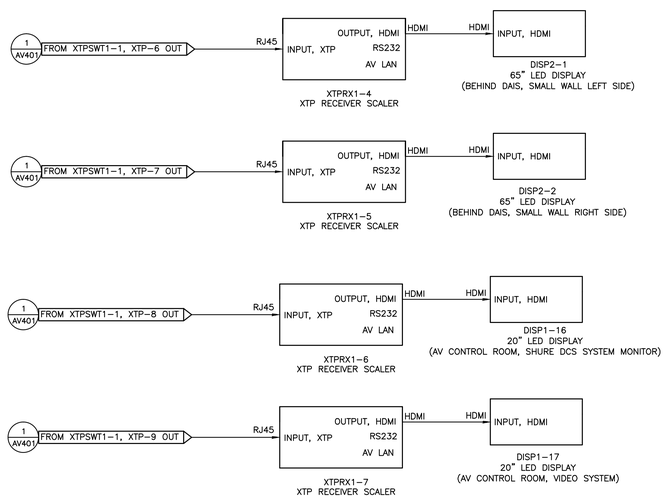

BOARDROOM OTHER DISPLAYS - AUDIOVISUAL SYSTEM DIAGRAM (3)

SCALE: N.T.S.

ENGINEER

tk1sc COLLABORATIVE
15231 Laguna Canyon Road, Suite 100
Irvine, California 92618
949.751.5800 www.tk1sc.com
(Project Manager- Scott Tonelson)
tk1sc Job #: 2015-0490

This and all other project documents and all ideas, aesthetics and designs incorporated therein are instruments of service. All project documents are the registered property of tk1sc and cannot be lawfully used in whole or in part for any project or purpose except as described in the contractual agreement between tk1sc and Client. tk1sc hereby gives formal notice that any such project document use, reproduction or modification (misuse) is not only unlawful but automatically binds all parties involved with misuse to fully indemnify and defend tk1sc and tk1sc's Consultants to the maximum legal extent against all losses, demands, claims or liabilities arising directly or indirectly from project document misuse.

Project documents describe design intent of work and are not a representation of as-built or existing conditions. tk1sc and tk1sc's Consultants make no representations concerning the accuracy of documents and are not responsible for any discrepancies between project documents and the existing conditions.

© Copyright 2016

PROJECT

ORANGE COUNTY FIRE AUTHORITY

ONE FIRE AUTHORITY ROAD
IRVINE, CA 92602

ENGINEER'S STAMP

REVISION INFORMATION

REV.	DESCRIPTION	DATE

DATE 01-05-16 DRAWN BY JS
SCALE N.T.S. CHECKED BY SKT

DRAWING TITLE

AUDIOVISUAL SYSTEMS DIGITAL VIDEO DISPLAYS

DRAWING No.

AV-401.1

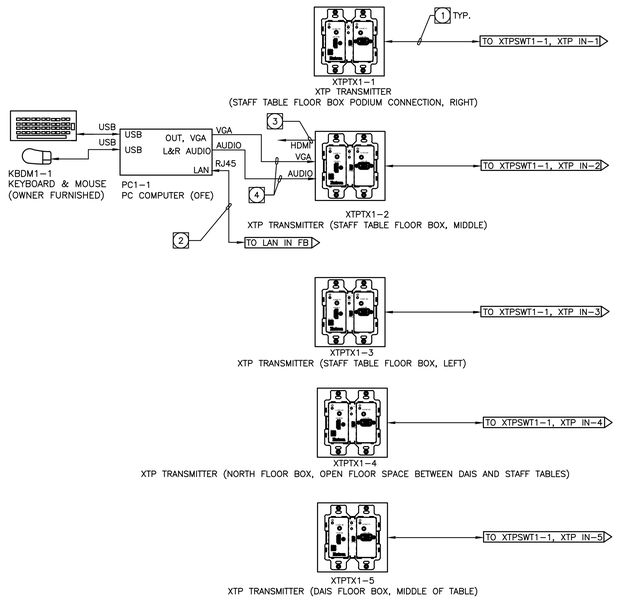

BOARDROOM REMOTE INPUTS - AUDIOVISUAL SYSTEM DIAGRAM (2)

SCALE: N.T.S.

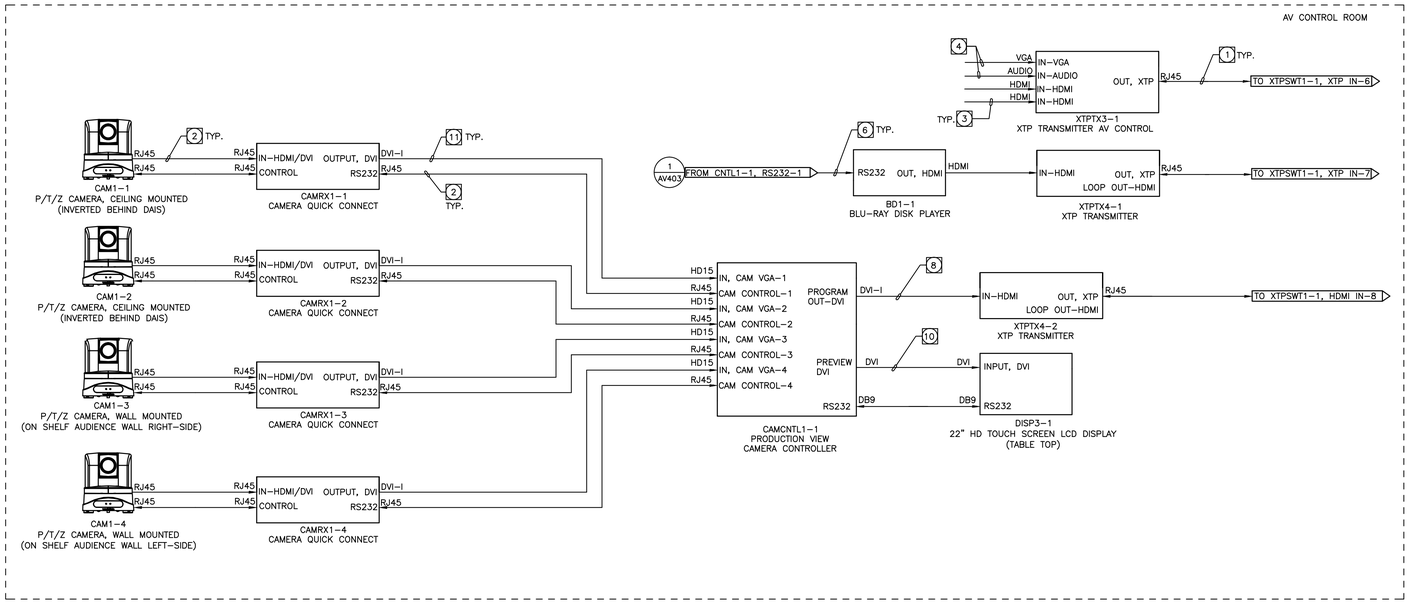

AV CONTROL ROOM VIDEO / CAMERA SYSTEM - AUDIOVISUAL SYSTEM DIAGRAM (3)

SCALE: N.T.S.

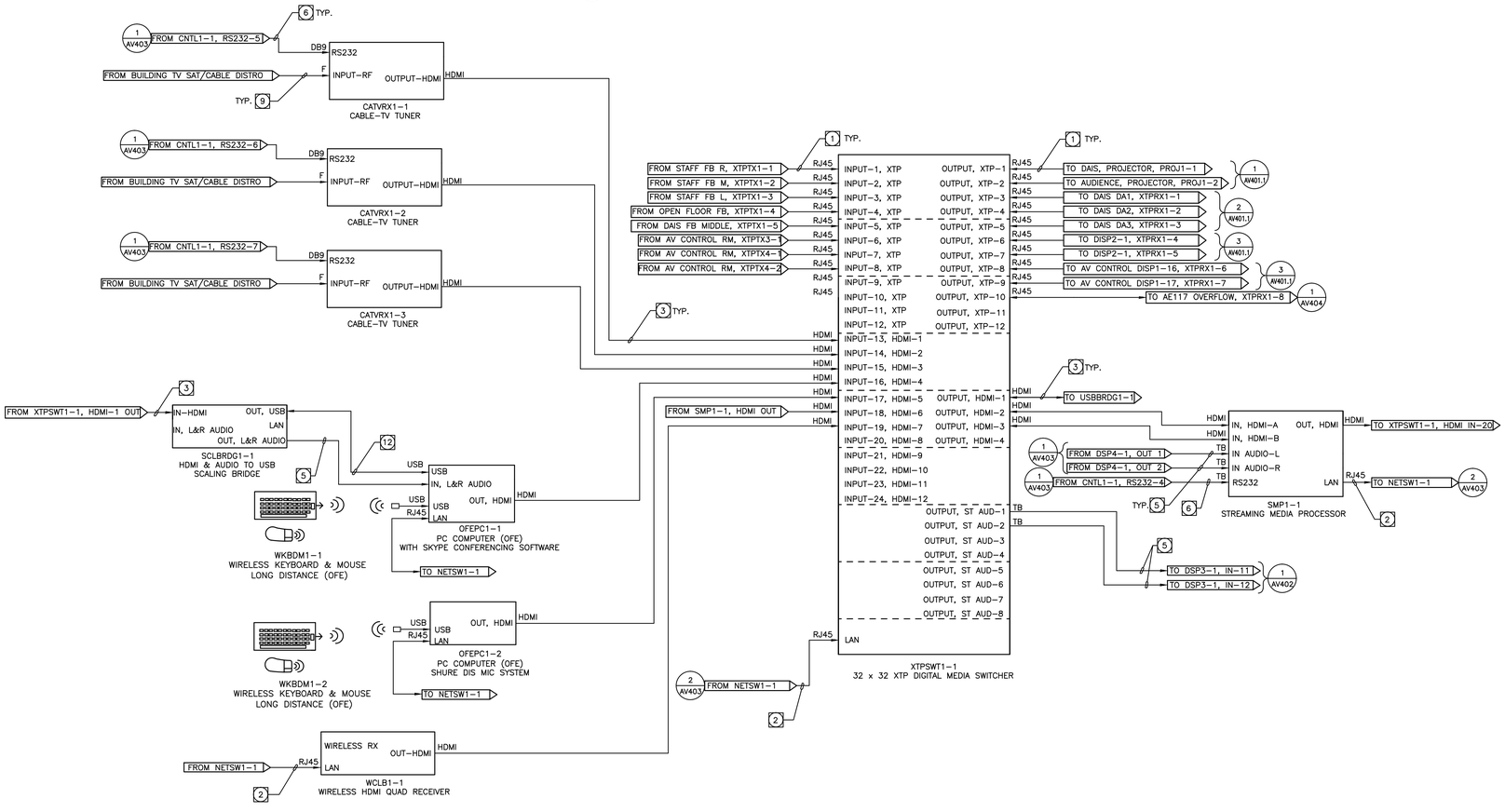

BOARDROOM VIDEO SYSTEM - AUDIOVISUAL SYSTEM DIAGRAM (1)

SCALE: N.T.S.

PLAN NOTES:

1. CABLE, EXTRON XTP/DTP, PLENUM RATED, SHIELDED CAT-6A WITH SHIELDED CONNECTORS. SEE SPECIFICATIONS SECTION 274100.
2. CABLE, DATA, CAT-6, PLENUM RATED. SEE SPECIFICATIONS SECTION.
3. CABLE, HDMI TO HDMI, PRE-TERMINATED. SEE SPECIFICATIONS SECTION 274100.
4. CABLE, VGA & AUDIO, PRE-TERMINATED. SEE SPECIFICATIONS SECTION 274100.
5. CABLE, AUDIO, 2-22 SHIELDED, 22 AWG, STP, PLENUM RATED. SEE SPECIFICATIONS SECTION 274100.
6. CABLE, CONTROL, PLENUM RATED. SEE SPECIFICATIONS SECTION 274100.
7. CABLE, SPEAKER & RELAY, 2-16, 16-AWG, NON-SHIELDED PAIR, PLENUM RATED. SEE SPECIFICATIONS SECTION 274100.
8. CABLE, DVI-D TO HDMI, PRE-TERMINATED. SEE SPECIFICATIONS SECTION 274100.
9. EXISTING CABLES, CATV COAX, SPEAKER, MICROPHONE, VGA, RF
10. CABLE, DVI TO DVI, PRE-TERMINATED. SEE SPECIFICATIONS SECTION 274100.
11. CABLE, DVI TO VGA, PRE-TERMINATED. SEE SPECIFICATIONS SECTION 274100.
12. CABLE, USB TO USB VERIFY CONNECTOR ON DEVICES, PRE-TERMINATED. SEE SPECIFICATIONS SECTION 274100.

ENGINEER

tk1sc COLLABORATIVE
15231 Laguna Canyon Road, Suite 100
Irvine, California 92618
949.751.5900 www.tk1sc.com
(Project Manager- Scott Tonelson)
tk1sc Job #: 2015-0490

This and all other project documents and all ideas, aesthetics and designs incorporated therein are instruments of service. All project documents are the registered property of tk1sc and cannot be lawfully used in whole or in part for any project or purpose except as described in the contractual agreement between tk1sc and Client. tk1sc hereby gives formal notice that any such project document use, reproduction or modification (misuse) is not only unlawful but automatically binds all parties involved with misuse to fully indemnify and defend tk1sc and tk1sc's Consultants to the maximum legal extent against all losses, demands, claims or liabilities arising directly or indirectly from project document misuse.

Project documents describe design intent of work and are not a representation of as-built or existing conditions. tk1sc and tk1sc's Consultants make no representations concerning the accuracy of documents and are not responsible for any discrepancies between project documents and the existing conditions.

© Copyright 2016

PROJECT

ORANGE COUNTY FIRE AUTHORITY

ONE FIRE AUTHORITY ROAD
IRVINE, CA 92602

ENGINEER'S STAMP

REVISION INFORMATION

REV.	DESCRIPTION	DATE

DATE 01-05-16 DRAWN BY JS
SCALE N.T.S. CHECKED BY SKT

DRAWING TITLE

AUDIOVISUAL SYSTEMS DIGITAL VIDEO

DRAWING No.

AV-401

PLAN NOTES:

1. CABLE, EXTRON XTP/DTP, PLENUM RATED, SHIELDED CAT-6A WITH SHIELDED CONNECTORS. SEE SPECIFICATIONS SECTION 274100.
2. CABLE, DATA, CAT-6, PLENUM RATED. SEE OCFA SPECIFICATIONS STANDARDS.
3. CABLE, HDMI TO HDMI, PRE-TERMINATED. SEE SPECIFICATIONS SECTION 274100.
4. CABLE, VGA & AUDIO, PRE-TERMINATED. SEE SPECIFICATIONS SECTION 274100.
5. CABLE, AUDIO, 2-22 SHIELDED, 22 AWG, STP, PLENUM RATED. SEE SPECIFICATIONS SECTION 274100.
6. CABLE, CONTROL, PLENUM RATED. SEE SPECIFICATIONS SECTION 274100.
7. CABLE, SPEAKER & RELAY, 2-16, 16-AWG, NON-SHIELDED PAIR, PLENUM RATED. SEE SPECIFICATIONS SECTION 274100.
8. CABLE, DVI-D TO HDMI, PRE-TERMINATED. SEE SPECIFICATIONS SECTION 274100.
9. EXISTING CABLES, CATV COAX, SPEAKER, MICROPHONE, VGA, RF
10. CABLE, DVI TO DVI, PRE-TERMINATED. SEE SPECIFICATIONS SECTION 274100.
11. CABLE, DVI TO VGA, PRE-TERMINATED. SEE SPECIFICATIONS SECTION 274100.
12. CABLE, USB TO USB VERIFY CONNECTOR ON DEVICES, PRE-TERMINATED. SEE SPECIFICATIONS SECTION 274100.

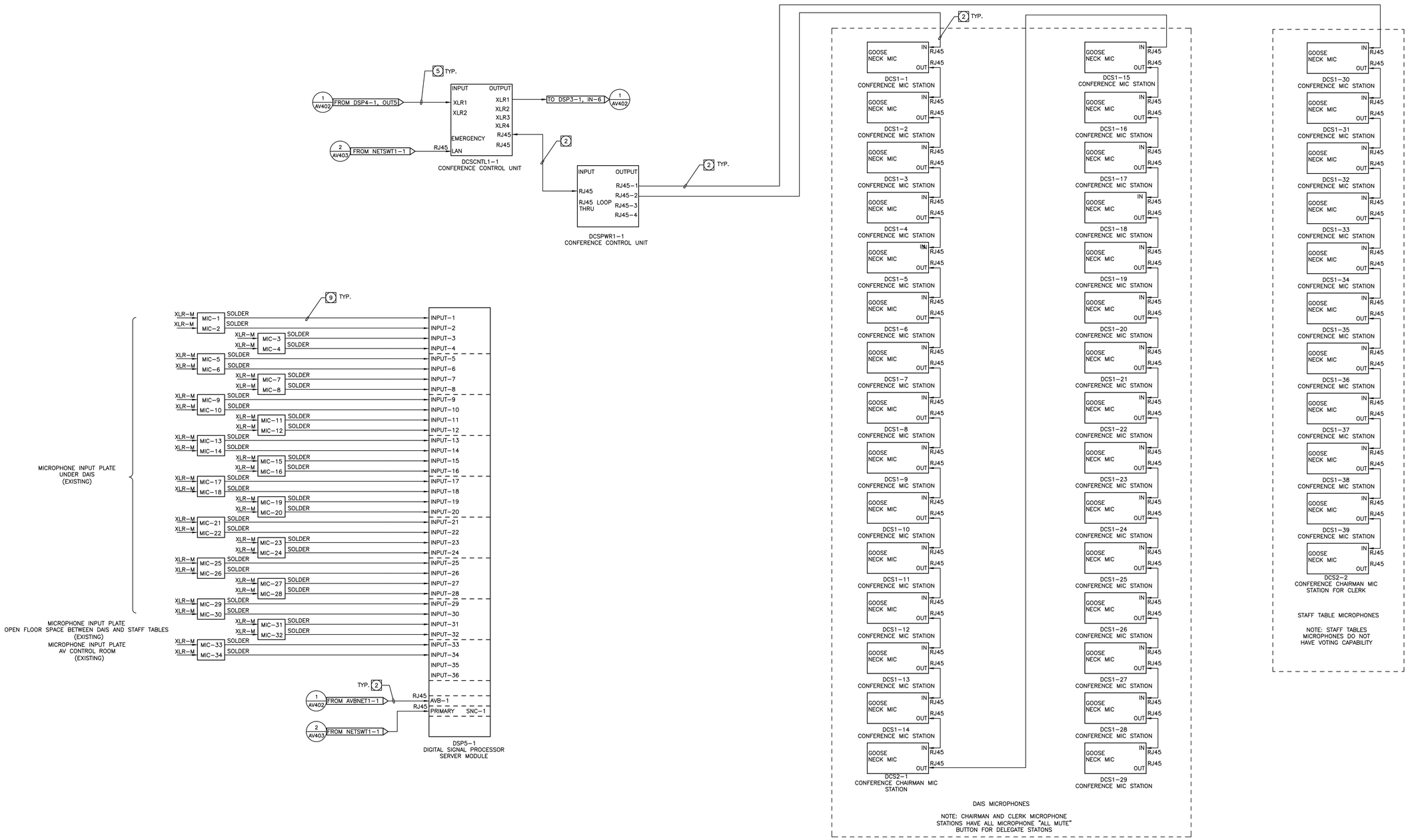

BOARDROOM AUDIO SYSTEM - AUDIOVISUAL SYSTEM DIAGRAM (2)

SCALE: N.T.S.

BOARDROOM AUDIO SYSTEM - AUDIOVISUAL SYSTEM DIAGRAM (1)

SCALE: N.T.S.

ENGINEER

tk1sc COLLABORATIVE
15231 Laguna Canyon Road, Suite 100
Irvine, California 92618
949.751.5800 www.tk1sc.com
(Project Manager- Scott Tonelson)
tk1sc Job #: 2015-0490

This and all other project documents and all ideas, aesthetics and designs incorporated therein are instruments of service. All project documents are the registered property of tk1sc and cannot be lawfully used in whole or in part for any project or purpose except as described in the contractual agreement between tk1sc and Client. tk1sc hereby gives formal notice that any such project document use, reproduction or modification (misuse) is not only unlawful but automatically binds all parties involved with misuse to fully indemnify and defend tk1sc and tk1sc's Consultants to the maximum legal extent against all losses, demands, claims or liabilities arising directly or indirectly from project document misuse.

Project documents describe design intent of work and are not a representation of as-built or existing conditions. tk1sc and tk1sc's Consultants make no representations concerning the accuracy of documents and are not responsible for any discrepancies between project documents and the existing conditions.

© Copyright 2016

PROJECT

ORANGE COUNTY FIRE AUTHORITY

ONE FIRE AUTHORITY ROAD
IRVINE, CA 92602

ENGINEER'S STAMP

REVISION INFORMATION

REV.	DESCRIPTION	DATE

DATE 01-05-16 DRAWN BY JS
SCALE N.T.S. CHECKED BY SKT

DRAWING TITLE

AUDIOVISUAL SYSTEMS DIGITAL AUDIO

DRAWING No.

AV-402.1

PLAN NOTES:

1. CABLE, EXTRON XTP/DTP, PLENUM RATED, SHIELDED CAT-6A WITH SHIELDED CONNECTORS. SEE SPECIFICATIONS SECTION 274100.
2. CABLE, DATA, CAT-6, PLENUM RATED. SEE OCFA SPECIFICATIONS STANDARDS.
3. CABLE, HDMI TO HDMI, PRE-TERMINATED. SEE SPECIFICATIONS SECTION 274100.
4. CABLE, VGA & AUDIO, PRE-TERMINATED. SEE SPECIFICATIONS SECTION 274100.
5. CABLE, AUDIO, 2-22 SHIELDED, 22 AWG, STP, PLENUM RATED. SEE SPECIFICATIONS SECTION 274100.
6. CABLE, CONTROL, PLENUM RATED. SEE SPECIFICATIONS SECTION 274100.
7. CABLE, SPEAKER & RELAY, 2-16, 16-AWG, NON-SHIELDED PAIR, PLENUM RATED. SEE SPECIFICATIONS SECTION 274100.
8. CABLE, DVI-D TO HDMI, PRE-TERMINATED. SEE SPECIFICATIONS SECTION 274100.
9. EXISTING CABLES, CATV COAX, SPEAKER, MICROPHONE, VGA, RF
10. CABLE, DVI TO DVI, PRE-TERMINATED. SEE SPECIFICATIONS SECTION 274100.
11. CABLE, DVI TO VGA, PRE-TERMINATED. SEE SPECIFICATIONS SECTION 274100.
12. CABLE, USB TO USB VERIFY CONNECTOR ON DEVICES, PRE-TERMINATED. SEE SPECIFICATIONS SECTION 274100.
13. CABLE, RF COAXIAL, RG-58 , PLENUM RATED. SEE SPECIFICATIONS SECTION 274100.
14. CABLE, SPEAKER, PLENUM RATED. SEE SPECIFICATIONS SECTION 274100.

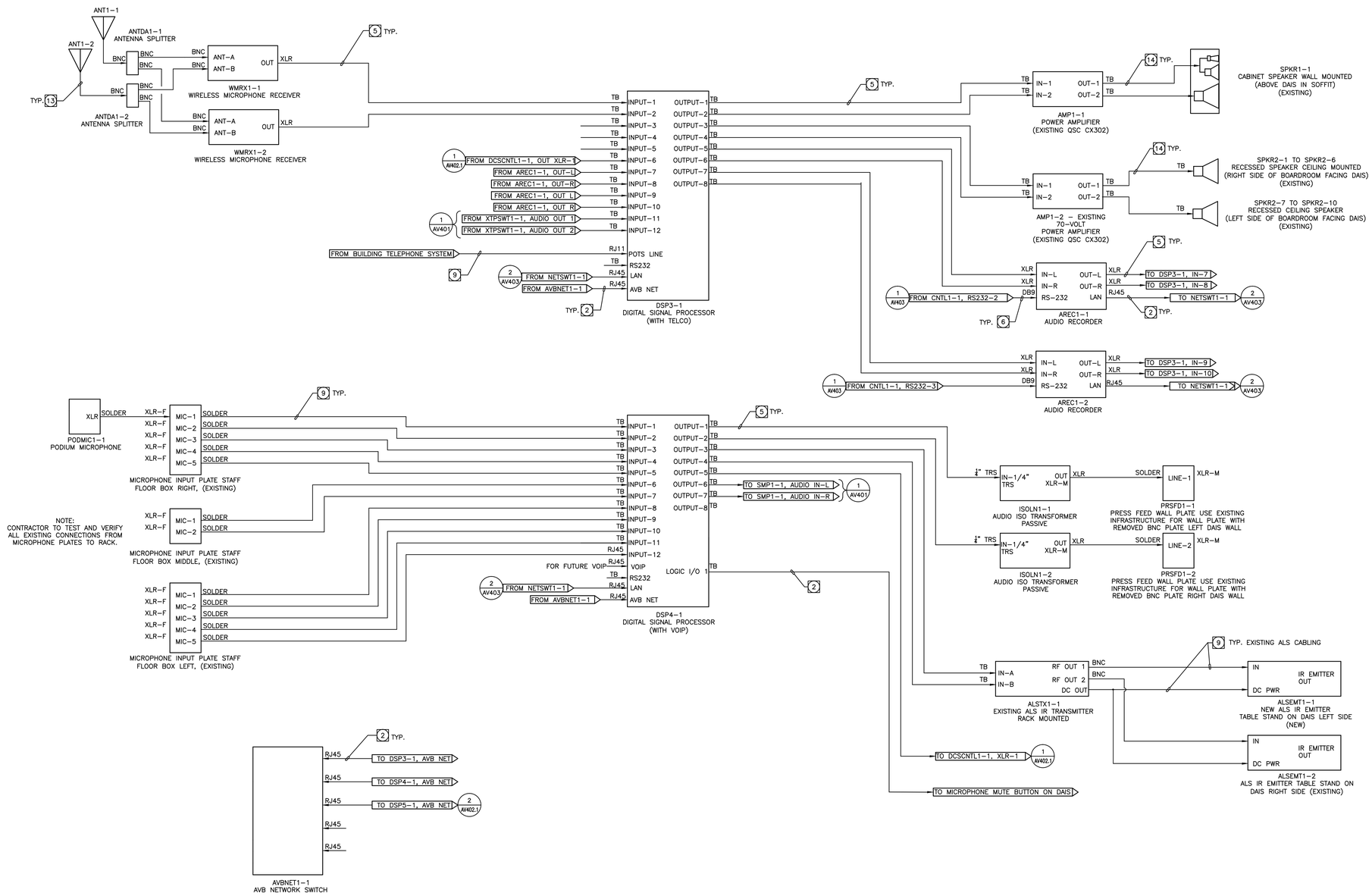

BOARDROOM AUDIO SYSTEM - AUDIOVISUAL SYSTEM DIAGRAM (1)

SCALE: N.T.S.

ENGINEER

tk1sc COLLABORATIVE
15231 Laguna Canyon Road, Suite 100
Irvine, California 92618
949.751.5800 www.tk1sc.com
(Project Manager- Scott Tonelson)
tk1sc Job #: 2015-0490

This and all other project documents and all ideas, aesthetics and designs incorporated therein are instruments of service. All project documents are the registered property of tk1sc and cannot be lawfully used in whole or in part for any project or purpose except as described in the contractual agreement between tk1sc and Client. tk1sc hereby gives formal notice that any such project document use, reproduction or modification (misuse) is not only unlawful but automatically binds all parties involved with misuse to fully indemnify and defend tk1sc and tk1sc's Consultants to the maximum legal extent against all losses, demands, claims or liabilities arising directly or indirectly from project document misuse.

Project documents describe design intent of work and are not a representation of as-built or existing conditions. tk1sc and tk1sc's Consultants make no representations concerning the accuracy of documents and are not responsible for any discrepancies between project documents and the existing conditions.

© Copyright 2016

PROJECT

ORANGE COUNTY FIRE AUTHORITY

ONE FIRE AUTHORITY ROAD
IRVINE, CA 92602

ENGINEER'S STAMP

REVISION INFORMATION

REV.	DESCRIPTION	DATE

DATE 01-05-16 DRAWN BY JS
SCALE N.T.S. CHECKED BY SKT

DRAWING TITLE

AUDIOVISUAL SYSTEMS DIGITAL AUDIO

DRAWING No.

AV-402

PLAN NOTES:

1. CABLE, EXTRON XTP/DTP, PLENUM RATED, SHIELDED CAT-6A WITH SHIELDED CONNECTORS. SEE SPECIFICATIONS SECTION 274100.
2. CABLE, DATA, CAT-6, PLENUM RATED. SEE SPECIFICATIONS SECTION.
3. CABLE, HDMI TO HDMI, PRE-TERMINATED. SEE SPECIFICATIONS SECTION 274100.
4. CABLE, VGA & AUDIO, PRE-TERMINATED. SEE SPECIFICATIONS SECTION 274100.
5. CABLE, AUDIO, 2-22 SHIELDED, 22 AWG, STP, PLENUM RATED. SEE SPECIFICATIONS SECTION 274100.
6. CABLE, CONTROL, PLENUM RATED. SEE SPECIFICATIONS SECTION 274100.
7. CABLE, SPEAKER & RELAY, 2-16, 16-AWG, NON-SHIELDED PAIR, PLENUM RATED. SEE SPECIFICATIONS SECTION 274100.
8. CABLE, DVI-D TO HDMI, PRE-TERMINATED. SEE SPECIFICATIONS SECTION 274100.
9. EXISTING CABLES, CATV COAX, SPEAKER, MICROPHONE, VGA, RF
10. CABLE, DVI TO DVI, PRE-TERMINATED. SEE SPECIFICATIONS SECTION 274100.
11. CABLE, DVI TO VGA, PRE-TERMINATED. SEE SPECIFICATIONS SECTION 274100.
12. CABLE, USB TO USB VERIFY CONNECTOR ON DEVICES, PRE-TERMINATED. SEE SPECIFICATIONS SECTION 274100.

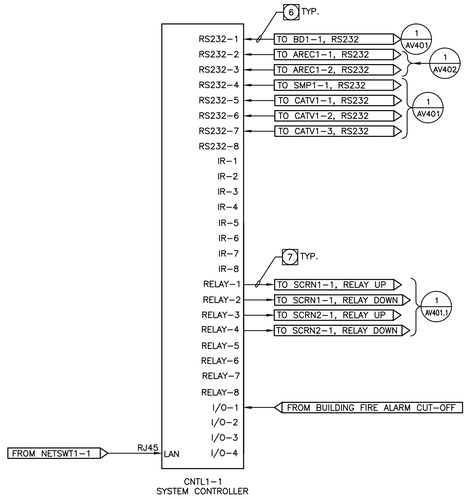

BOARDROOM VIDEO SYSTEM - AUDIOVISUAL CONTROL DIAGRAM (1)

SCALE: N.T.S.

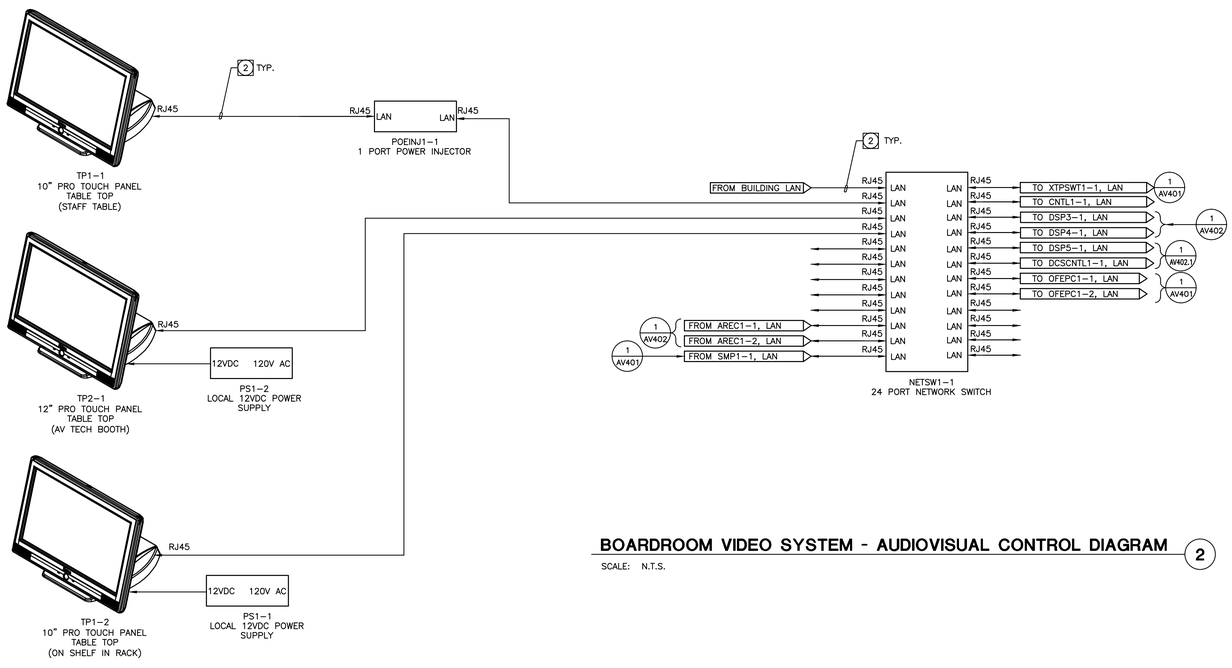

BOARDROOM VIDEO SYSTEM - AUDIOVISUAL CONTROL DIAGRAM (2)

SCALE: N.T.S.

ENGINEER

tk1sc COLLABORATIVE
15231 Laguna Canyon Road, Suite 100
Irvine, California 92618
949.751.5800 www.tk1sc.com
(Project Manager- Scott Tonelson)
tk1sc Job #: 2015-0490

This and all other project documents and all ideas, aesthetics and designs incorporated therein are instruments of service. All project documents are the registered property of tk1sc and cannot be lawfully used in whole or in part for any project or purpose except as described in the contractual agreement between tk1sc and Client. tk1sc hereby gives formal notice that any such project document use, reproduction or modification (misuse) is not only unlawful but automatically binds all parties involved with misuse to fully indemnify and defend tk1sc and tk1sc's Consultants to the maximum legal extent against all losses, demands, claims or liabilities arising directly or indirectly from project document misuse.

Project documents describe design intent of work and are not a representation of as-built or existing conditions. tk1sc and tk1sc's Consultants make no representations concerning the accuracy of documents and are not responsible for any discrepancies between project documents and the existing conditions.

© Copyright 2016

PROJECT

ORANGE COUNTY FIRE AUTHORITY

ONE FIRE AUTHORITY ROAD
IRVINE, CA 92602

ENGINEER'S STAMP

REVISION INFORMATION

REV.	DESCRIPTION	DATE

DATE 01-05-16 DRAWN BY JS
SCALE N.T.S. CHECKED BY SKT

DRAWING TITLE

AUDIOVISUAL SYSTEMS CONTROL

DRAWING No.

AV-403

PLAN NOTES:

1. CABLE, EXTRON XTP/DTP, PLENUM RATED, SHIELDED CAT-6A WITH SHIELDED CONNECTORS. SEE SPECIFICATIONS SECTION 274100.
2. CABLE, DATA, CAT-6, PLENUM RATED. SEE SPECIFICATIONS SECTION.
3. CABLE, HDMI TO HDMI, PRE-TERMINATED. SEE SPECIFICATIONS SECTION 274100.
4. CABLE, VGA & AUDIO, PRE-TERMINATED. SEE SPECIFICATIONS SECTION 274100.
5. CABLE, AUDIO, 2-22 SHIELDED, 22 AWG, STP, PLENUM RATED. SEE SPECIFICATIONS SECTION 274100.
6. CABLE, CONTROL, PLENUM RATED. SEE SPECIFICATIONS SECTION 274100.
7. CABLE, SPEAKER & RELAY, 2-16, 16-AWG, NON-SHIELDED PAIR, PLENUM RATED. SEE SPECIFICATIONS SECTION 274100.
8. CABLE, DVI-D TO HDMI, PRE-TERMINATED. SEE SPECIFICATIONS SECTION 274100.
9. EXISTING CABLES, CATV COAX, SPEAKER, MICROPHONE, VGA, RF
10. CABLE, DVI TO DVI, PRE-TERMINATED. SEE SPECIFICATIONS SECTION 274100.
11. CABLE, DVI TO VGA, PRE-TERMINATED. SEE SPECIFICATIONS SECTION 274100.
12. CABLE, USB TO USB VERIFY CONNECTOR ON DEVICES, PRE-TERMINATED. SEE SPECIFICATIONS SECTION 274100.
13. CABLE, SPEAKER, PLENUM RATED. SEE SPECIFICATIONS SECTION 274100.

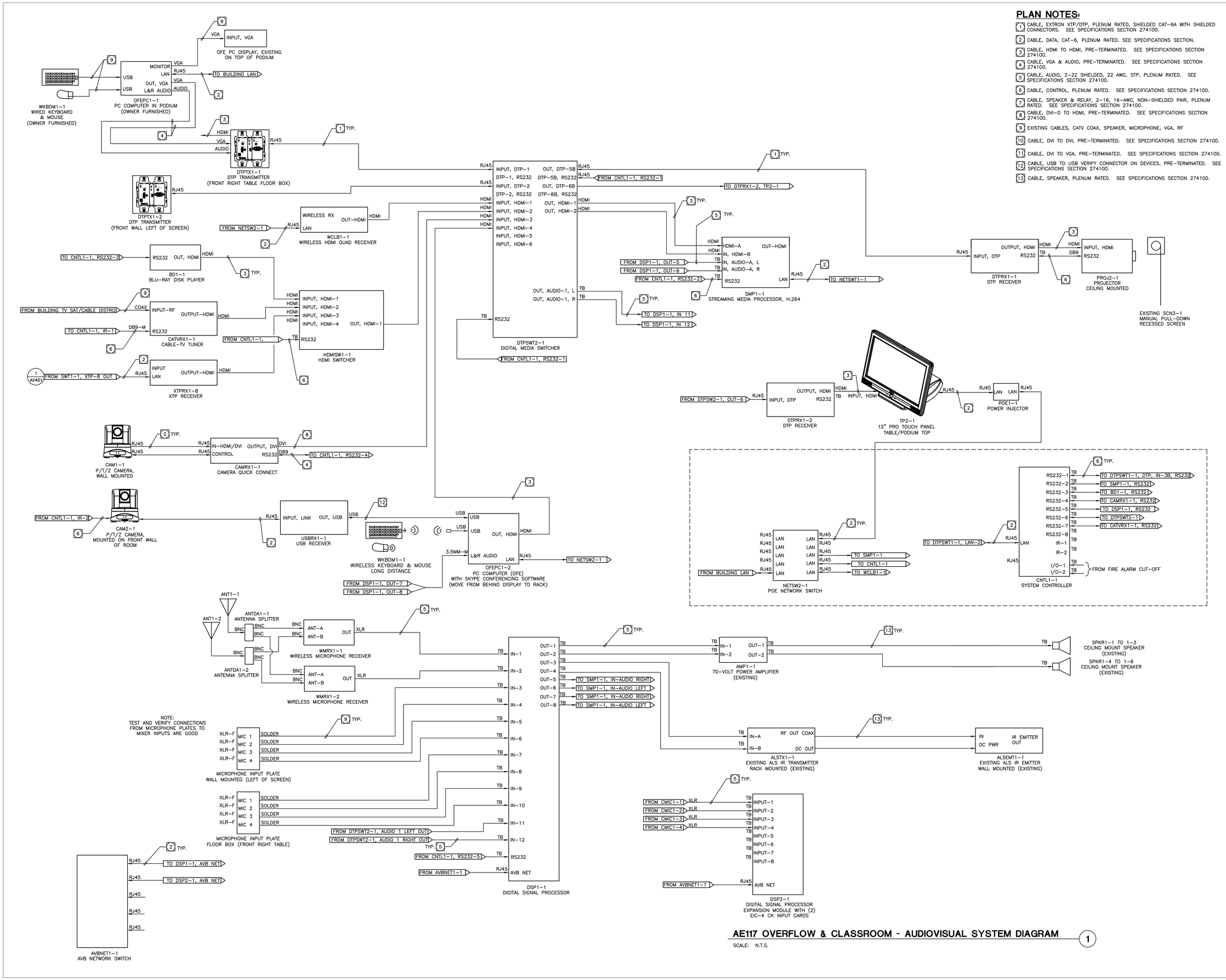

AE117 OVERFLOW & CLASSROOM - AUDIOVISUAL SYSTEM DIAGRAM (1)

SCALE: N.T.S.

ENGINEER

tk1sc COLLABORATIVE
15231 Laguna Canyon Road, Suite 100
Irvine, California 92618
949.751.5800 www.tk1sc.com
(Project Manager- Scott Tonelson)
tk1sc Job #: 2015-0490

This and all other project documents and all ideas, aesthetics and designs incorporated therein are instruments of service. All project documents are the registered property of tk1sc and cannot be lawfully used in whole or in part for any project or purpose except as described in the contractual agreement between tk1sc and Client. tk1sc hereby gives formal notice that any such project document use, reproduction or modification (misuse) is not only unlawful but automatically binds all parties involved with misuse to fully indemnify and defend tk1sc and tk1sc's Consultants to the maximum legal extent against all losses, demands, claims or liabilities arising directly or indirectly from project document misuse.

Project documents describe design intent of work and are not a representation of as-built or existing conditions. tk1sc and tk1sc's Consultants make no representations concerning the accuracy of documents and are not responsible for any discrepancies between project documents and the existing conditions.

© Copyright 2016

PROJECT

ORANGE COUNTY FIRE AUTHORITY

ONE FIRE AUTHORITY ROAD
IRVINE, CA 92602

ENGINEER'S STAMP

REVISION INFORMATION

REV.	DESCRIPTION	DATE

DATE 01-05-16 DRAWN BY JS
SCALE N.T.S. CHECKED BY SKT

DRAWING TITLE

AUDIOVISUAL SYSTEMS
VIDEO, AUDIO,
CONTROL
AE117

DRAWING No.

AV-404

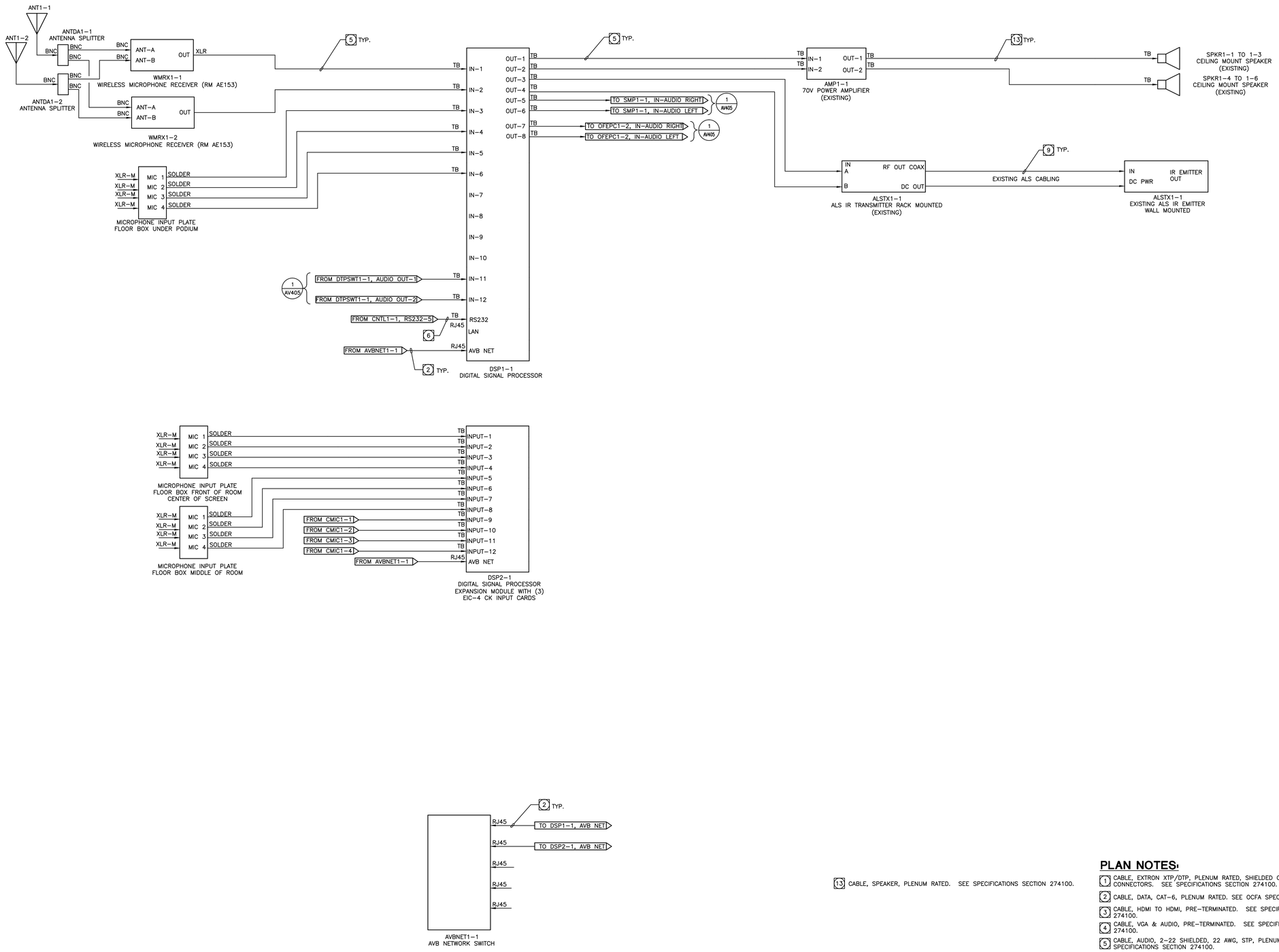

13 CABLE, SPEAKER, PLENUM RATED. SEE SPECIFICATIONS SECTION 274100.

PLAN NOTES:

1. CABLE, EXTRON XTP/DTP, PLENUM RATED, SHIELDED CAT-6A WITH SHIELDED CONNECTORS. SEE SPECIFICATIONS SECTION 274100.
2. CABLE, DATA, CAT-6, PLENUM RATED. SEE OCFA SPECIFICATIONS STANDARDS.
3. CABLE, HDMI TO HDMI, PRE-TERMINATED. SEE SPECIFICATIONS SECTION 274100.
4. CABLE, VGA & AUDIO, PRE-TERMINATED. SEE SPECIFICATIONS SECTION 274100.
5. CABLE, AUDIO, 2-22 SHIELDED, 22 AWG, STP, PLENUM RATED. SEE SPECIFICATIONS SECTION 274100.
6. CABLE, CONTROL, PLENUM RATED. SEE SPECIFICATIONS SECTION 274100.
7. CABLE, SPEAKER & RELAY, 2-16, 16-AWG, NON-SHIELDED PAIR, PLENUM RATED. SEE SPECIFICATIONS SECTION 274100.
8. CABLE, DVI-D TO HDMI, PRE-TERMINATED. SEE SPECIFICATIONS SECTION 274100.
9. EXISTING CABLES, CATV COAX, SPEAKER, MICROPHONE, VGA, RF
10. CABLE, DVI TO DVI, PRE-TERMINATED. SEE SPECIFICATIONS SECTION 274100.
11. CABLE, DVI TO VGA, PRE-TERMINATED. SEE SPECIFICATIONS SECTION 274100.
12. CABLE, USB TO USB VERIFY CONNECTOR ON DEVICES, PRE-TERMINATED. SEE SPECIFICATIONS SECTION 274100.

AUDIOVISUAL SYSTEMS DIAGRAM VIDEO, AUDIO, CONTROL, CLASSROOMS AE153 (1)

N.T.S.

ENGINEER

tk1sc COLLABORATIVE
15231 Laguna Canyon Road, Suite 100
Irvine, California 92618
949.751.5800 www.tk1sc.com
(Project Manager- Scott Tonelson)
tk1sc Job #: 2015-0490

This and all other project documents and all ideas, aesthetics and designs incorporated therein are instruments of service. All project documents are the registered property of tk1sc and cannot be lawfully used in whole or in part for any project or purpose except as described in the contractual agreement between tk1sc and Client. tk1sc hereby gives formal notice that any such project document use, reproduction or modification (misuse) is not only unlawful but automatically binds all parties involved with misuse to fully indemnify and defend tk1sc and tk1sc's Consultants to the maximum legal extent against all losses, demands, claims or liabilities arising directly or indirectly from project document misuse.

Project documents describe design intent of work and are not a representation of as-built or existing conditions. tk1sc and tk1sc's Consultants make no representations concerning the accuracy of documents and are not responsible for any discrepancies between project documents and the existing conditions.

© Copyright 2016

PROJECT

ORANGE COUNTY FIRE AUTHORITY

ONE FIRE AUTHORITY ROAD
IRVINE, CA 92602

ENGINEER'S STAMP

REVISION INFORMATION

REV.	DESCRIPTION	DATE

DATE	01-05-16	DRAWN BY	JS
SCALE	N.T.S.	CHECKED BY	SKT

DRAWING TITLE

AUDIOVISUAL SYSTEMS AUDIO DIAGRAM CLASSROOM AE153

DRAWING No.

AV-405.1

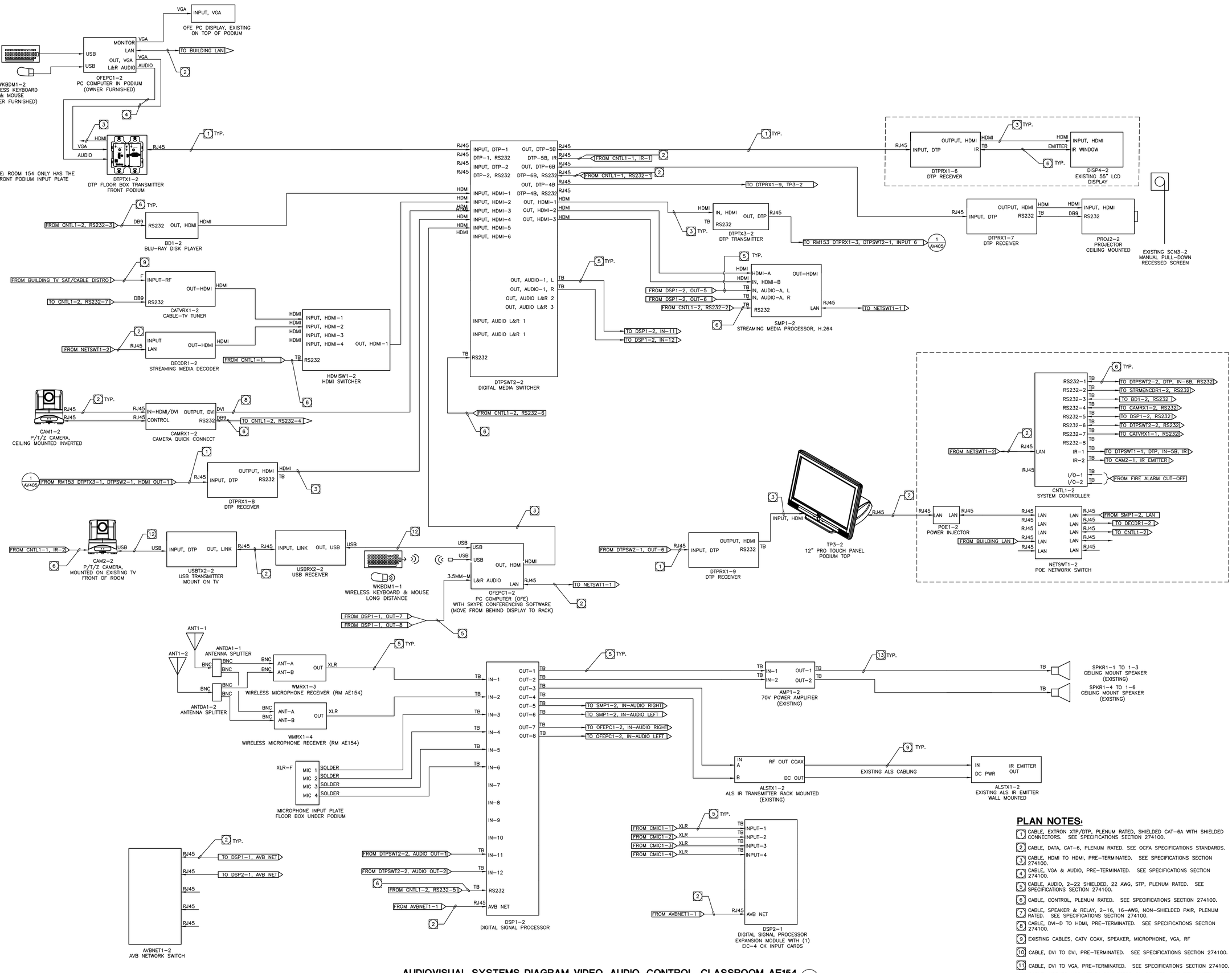

AUDIOVISUAL SYSTEMS DIAGRAM VIDEO, AUDIO, CONTROL, CLASSROOM AE154 (1)

N.T.S.

PLAN NOTES:

1. CABLE, EXTRON XTP/DTP, PLENUM RATED, SHIELDED CAT-6A WITH SHIELDED CONNECTORS. SEE SPECIFICATIONS SECTION 274100.
2. CABLE, DATA, CAT-6, PLENUM RATED. SEE OCFA SPECIFICATIONS STANDARDS.
3. CABLE, HDMI TO HDMI, PRE-TERMINATED. SEE SPECIFICATIONS SECTION 274100.
4. CABLE, VGA & AUDIO, PRE-TERMINATED. SEE SPECIFICATIONS SECTION 274100.
5. CABLE, AUDIO, 2-22 SHIELDED, 22 AWG, STP, PLENUM RATED. SEE SPECIFICATIONS SECTION 274100.
6. CABLE, CONTROL, PLENUM RATED. SEE SPECIFICATIONS SECTION 274100.
7. CABLE, SPEAKER & RELAY, 2-16, 16-AWG, NON-SHIELDED PAIR, PLENUM RATED. SEE SPECIFICATIONS SECTION 274100.
8. CABLE, DVI-D TO HDMI, PRE-TERMINATED. SEE SPECIFICATIONS SECTION 274100.
9. EXISTING CABLES, CATV COAX, SPEAKER, MICROPHONE, VGA, RF
10. CABLE, DVI TO DVI, PRE-TERMINATED. SEE SPECIFICATIONS SECTION 274100.
11. CABLE, DVI TO VGA, PRE-TERMINATED. SEE SPECIFICATIONS SECTION 274100.
12. CABLE, USB TO USB VERIFY CONNECTOR ON DEVICES, PRE-TERMINATED. SEE SPECIFICATIONS SECTION 274100.
13. CABLE, SPEAKER, PLENUM RATED. SEE SPECIFICATIONS SECTION 274100.

ENGINEER

tk1sc COLLABORATIVE
15231 Laguna Canyon Road, Suite 100
Irvine, California 92618
949.751.5800 www.tk1sc.com
(Project Manager- Scott Tonelson)
tk1sc Job #: 2015-0490

This and all other project documents and all ideas, aesthetics and designs incorporated therein are instruments of service. All project documents are the registered property of tk1sc and cannot be lawfully used in whole or in part for any project or purpose except as described in the contractual agreement between tk1sc and Client. tk1sc hereby gives formal notice that any such project document use, reproduction or modification (misuse) is not only unlawful but automatically binds all parties involved with misuse to fully indemnify and defend tk1sc and tk1sc's Consultants to the maximum legal extent against all losses, demands, claims or liabilities arising directly or indirectly from project document misuse.

Project documents describe design intent of work and are not a representation of as-built or existing conditions. tk1sc and tk1sc's Consultants make no representations concerning the accuracy of documents and are not responsible for any discrepancies between project documents and the existing conditions.

© Copyright 2016

PROJECT

ORANGE COUNTY FIRE AUTHORITY

ONE FIRE AUTHORITY ROAD
IRVINE, CA 92602

ENGINEER'S STAMP

REVISION INFORMATION

REV.	DESCRIPTION	DATE

DATE 01-05-16 DRAWN BY JS
SCALE N.T.S. CHECKED BY SKT

DRAWING TITLE

AUDIOVISUAL SYSTEMS DIAGRAM CLASSROOM AE154

DRAWING No.

AV-405.2

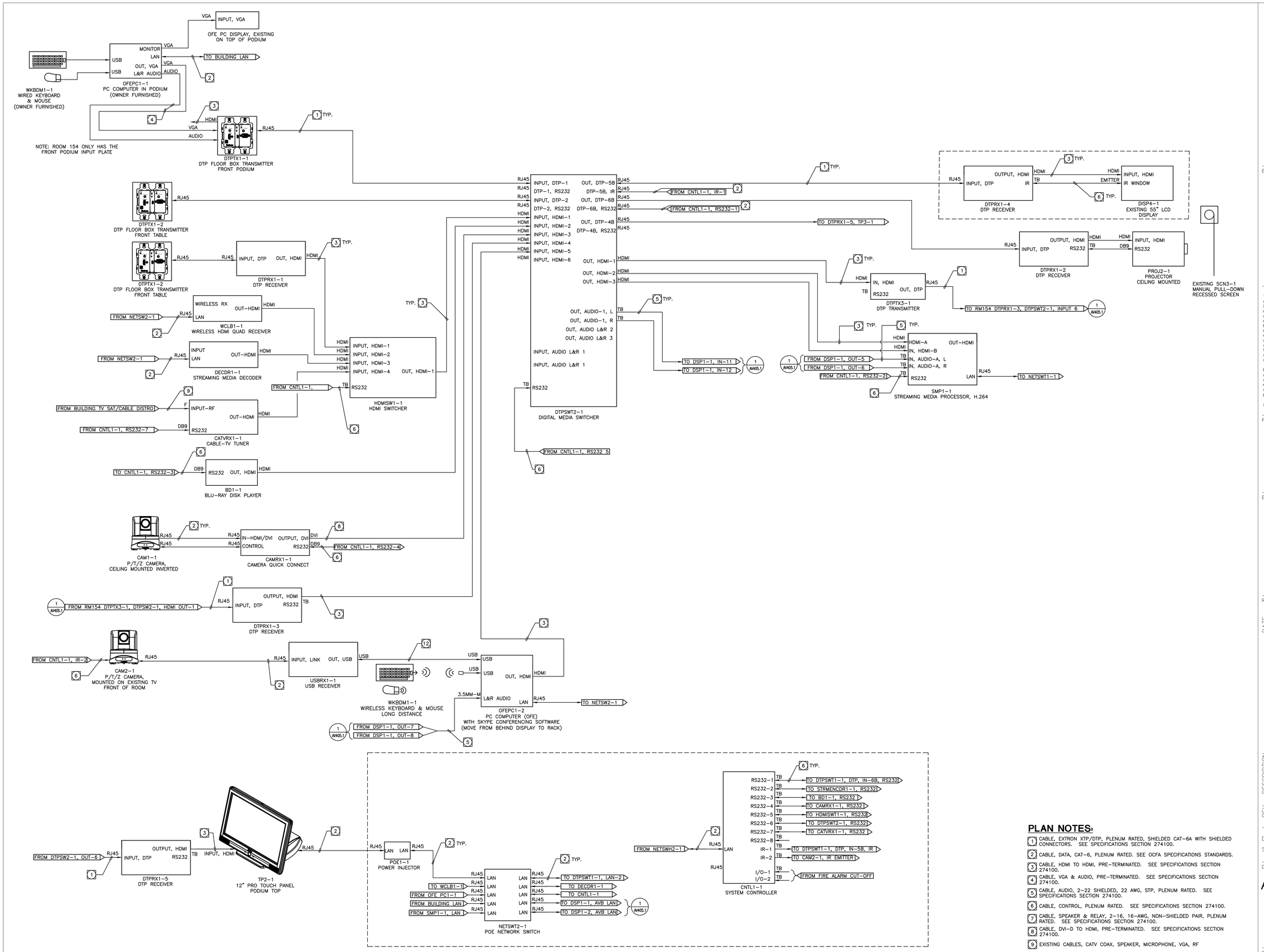

AUDIOVISUAL SYSTEMS DIAGRAM VIDEO, CONTROL, CLASSROOMS AE153

N.T.S.

1

PLAN NOTES:

1. CABLE, EXTRON XTP/DTP, PLENUM RATED, SHIELDED CAT-6A WITH SHIELDED CONNECTORS. SEE SPECIFICATIONS SECTION 274100.
2. CABLE, DATA, CAT-6, PLENUM RATED. SEE OCFA SPECIFICATIONS STANDARDS.
3. CABLE, HDMI TO HDMI, PRE-TERMINATED. SEE SPECIFICATIONS SECTION 274100.
4. CABLE, VGA & AUDIO, PRE-TERMINATED. SEE SPECIFICATIONS SECTION 274100.
5. CABLE, AUDIO, 2-22 SHIELDED, 22 AWG, STP, PLENUM RATED. SEE SPECIFICATIONS SECTION 274100.
6. CABLE, CONTROL, PLENUM RATED. SEE SPECIFICATIONS SECTION 274100.
7. CABLE, SPEAKER & RELAY, 2-16, 16-AWG, NON-SHIELDED PAIR, PLENUM RATED. SEE SPECIFICATIONS SECTION 274100.
8. CABLE, DVI-D TO HDMI, PRE-TERMINATED. SEE SPECIFICATIONS SECTION 274100.
9. EXISTING CABLES, CATV COAX, SPEAKER, MICROPHONE, VGA, RF
10. CABLE, DVI TO DVI, PRE-TERMINATED. SEE SPECIFICATIONS SECTION 274100.
11. CABLE, DVI TO VGA, PRE-TERMINATED. SEE SPECIFICATIONS SECTION 274100.
12. CABLE, USB TO USB VERIFY CONNECTOR ON DEVICES, PRE-TERMINATED. SEE SPECIFICATIONS SECTION 274100.

ENGINEER

tk1sc COLLABORATIVE
15231 Laguna Canyon Road, Suite 100
Irvine, California 92618
949.751.5800 www.tk1sc.com
(Project Manager- Scott Tonelson)
tk1sc Job #: 2015-0490

This and all other project documents and all ideas, aesthetics and designs incorporated therein are instruments of service. All project documents are the registered property of tk1sc and cannot be lawfully used in whole or in part for any project or purpose except as described in the contractual agreement between tk1sc and Client. tk1sc hereby gives formal notice that any such project document use, reproduction or modification (misuse) is not only unlawful but automatically binds all parties involved with misuse to fully indemnify and defend tk1sc and tk1sc's Consultants to the maximum legal extent against all losses, demands, claims or liabilities arising directly or indirectly from project document misuse.

Project documents describe design intent of work and are not a representation of as-built or existing conditions. tk1sc and tk1sc's Consultants make no representations concerning the accuracy of documents and are not responsible for any discrepancies between project documents and the existing conditions.

© Copyright 2016

PROJECT

ORANGE COUNTY FIRE AUTHORITY

ONE FIRE AUTHORITY ROAD
IRVINE, CA 92602

ENGINEER'S STAMP

REVISION INFORMATION

REV.	DESCRIPTION	DATE

DATE 01-05-16 DRAWN BY JS
SCALE N.T.S. CHECKED BY SKT

DRAWING TITLE

AUDIOVISUAL SYSTEMS DIAGRAM VIDEO. CONTROL. CLASSROOM AE153

DRAWING No.

AV-405

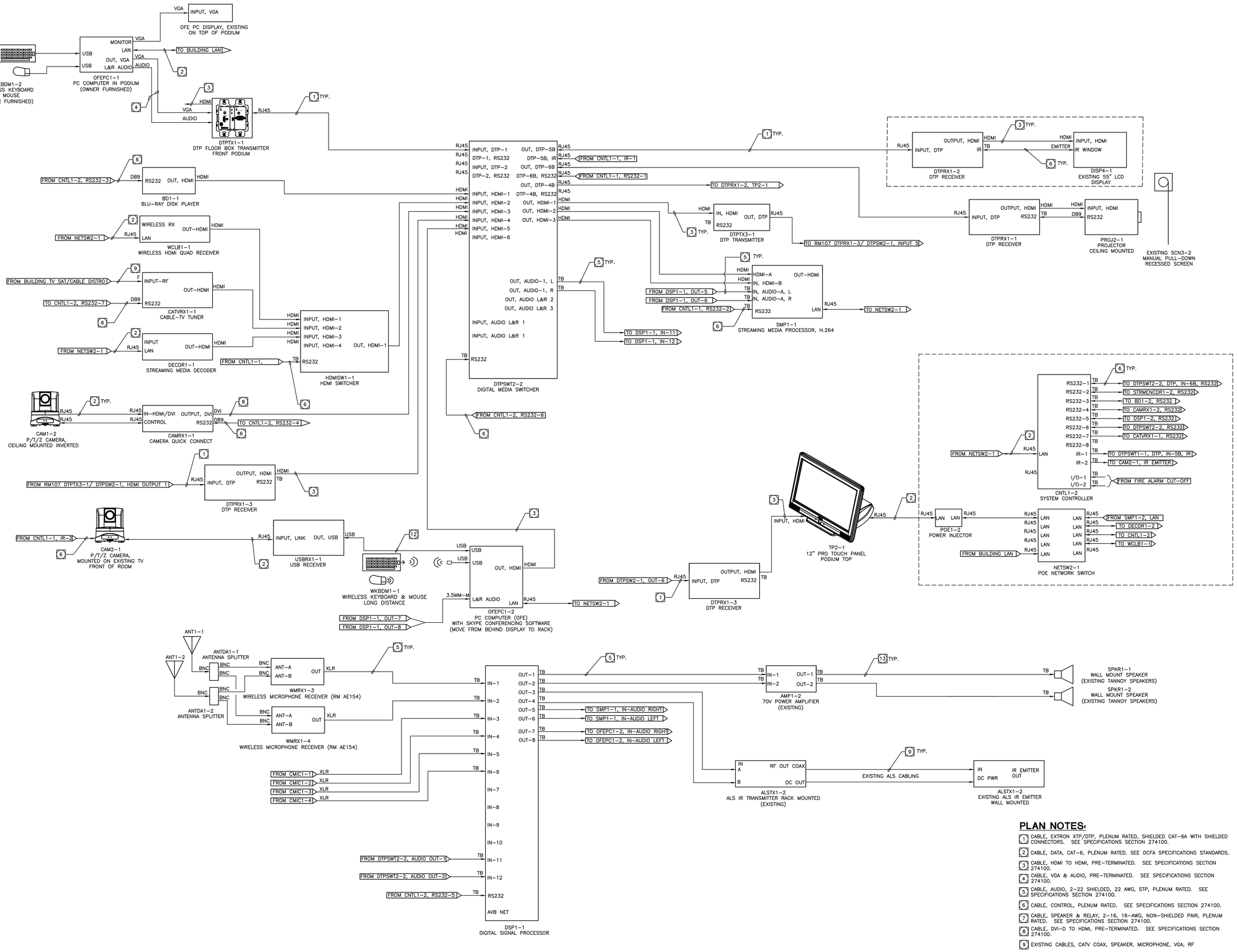

AUDIOVISUAL SYSTEMS DIAGRAM VIDEO, AUDIO, CONTROL, TRAINING CLASSROOMS D106 & D107

N.T.S.

NOTE: ROOMS D106 AND D107 HAVE THE SAME SIGNAL FLOW, THIS IS DRAWN FOR ROOM D106

1

PLAN NOTES:

1. CABLE, EXTRON XTP/DTP, PLENUM RATED, SHIELDED CAT-6A WITH SHIELDED CONNECTORS. SEE SPECIFICATIONS SECTION 274100.
2. CABLE, DATA, CAT-6, PLENUM RATED. SEE OCFA SPECIFICATIONS STANDARDS.
3. CABLE, HDMI TO HDMI, PRE-TERMINATED. SEE SPECIFICATIONS SECTION 274100.
4. CABLE, VGA & AUDIO, PRE-TERMINATED. SEE SPECIFICATIONS SECTION 274100.
5. CABLE, AUDIO, 2-22 SHIELDED, 22 AWG, STP, PLENUM RATED. SEE SPECIFICATIONS SECTION 274100.
6. CABLE, CONTROL, PLENUM RATED. SEE SPECIFICATIONS SECTION 274100.
7. CABLE, SPEAKER & RELAY, 2-16, 16-AWG, NON-SHIELDED PAIR, PLENUM RATED. SEE SPECIFICATIONS SECTION 274100.
8. CABLE, DVI-D TO HDMI, PRE-TERMINATED. SEE SPECIFICATIONS SECTION 274100.
9. EXISTING CABLES, CATV COAX, SPEAKER, MICROPHONE, VGA, RF
10. CABLE, DVI TO DVI, PRE-TERMINATED. SEE SPECIFICATIONS SECTION 274100.
11. CABLE, DVI TO VGA, PRE-TERMINATED. SEE SPECIFICATIONS SECTION 274100.
12. CABLE, USB TO USB VERIFY CONNECTOR ON DEVICES, PRE-TERMINATED. SEE SPECIFICATIONS SECTION 274100.
13. CABLE, SPEAKER, PLENUM RATED. SEE SPECIFICATIONS SECTION 274100.

ENGINEER

tk1sc COLLABORATIVE
15231 Laguna Canyon Road, Suite 100
Irvine, California 92618
949.751.5800 www.tk1sc.com
(Project Manager- Scott Tonelson)
tk1sc Job #: 2015-0490

This and all other project documents and all ideas, aesthetics and designs incorporated therein are instruments of service. All project documents are the registered property of tk1sc and cannot be lawfully used in whole or in part for any project or purpose except as described in the contractual agreement between tk1sc and Client. tk1sc hereby gives formal notice that any such project document use, reproduction or modification (misuse) is not only unlawful but automatically binds all parties involved with misuse to fully indemnify and defend tk1sc and tk1sc's Consultants to the maximum legal extent against all losses, demands, claims or liabilities arising directly or indirectly from project document misuse.

Project documents describe design intent of work and are not a representation of as-built or existing conditions. tk1sc and tk1sc's Consultants make no representations concerning the accuracy of documents and are not responsible for any discrepancies between project documents and the existing conditions.

© Copyright 2016

PROJECT

ORANGE COUNTY FIRE AUTHORITY

ONE FIRE AUTHORITY ROAD
IRVINE, CA 92602

ENGINEER'S STAMP

REVISION INFORMATION

REV.	DESCRIPTION	DATE

DATE 01-05-16 DRAWN BY JS
SCALE N.T.S. CHECKED BY SKT

DRAWING TITLE

AUDIOVISUAL SYSTEMS DIGITAL VIDEO TRAINING CLASSROOMS D106 & D107

DRAWING No.

AV406

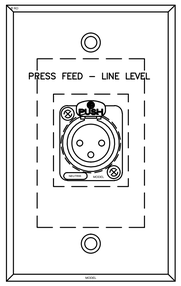

BOARDROOM PRESS FEED WALL PLATE (3)

N.T.S.

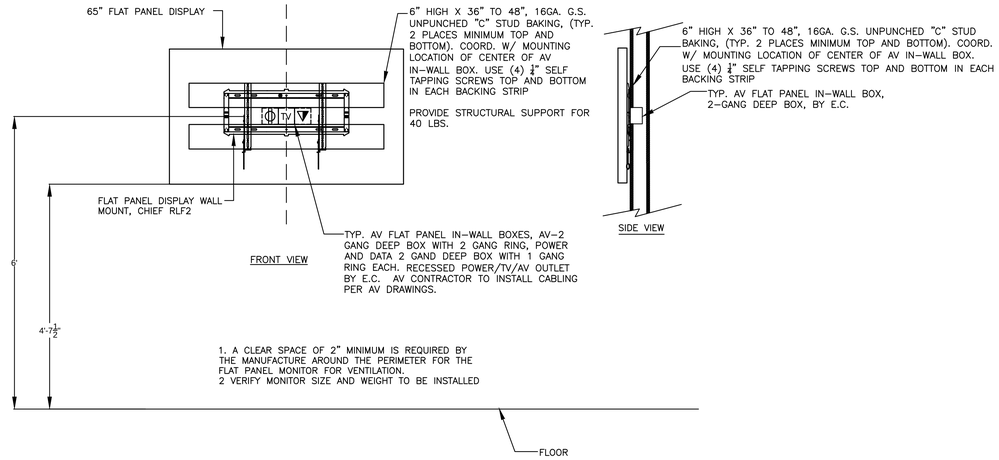

BOARDROOM LED DISPLAY ELEVATION DAIS RIGHT SIDE FROM AUDIANCE (1)

N.T.S.

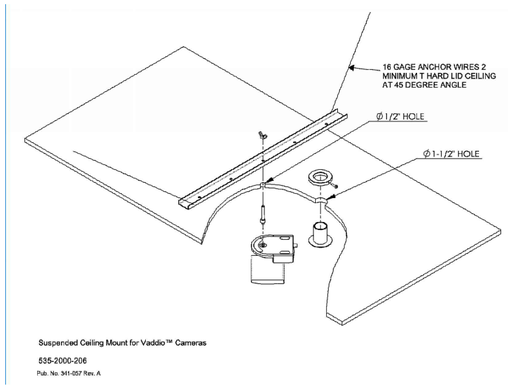

CEILING MOUNT DETAIL FOR VADDIO PTZ CAMERAS (4)

N.T.S.

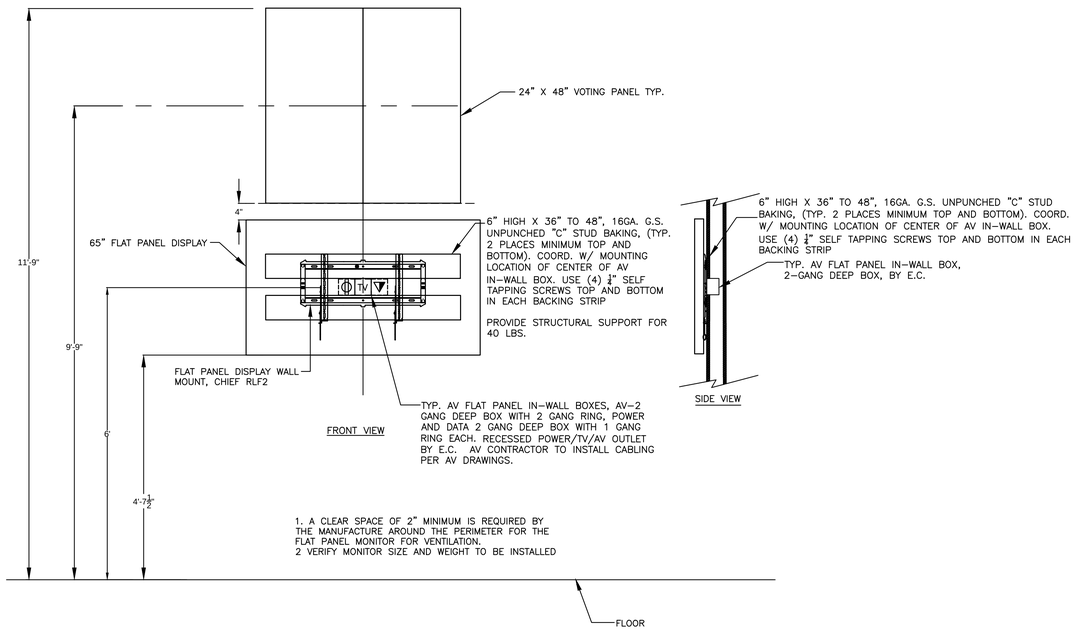

BOARDROOM LED DISPLAY ELEVATION & VOTING PANELS DAIS LEFT SIDE FROM AUDIANCE (2)

N.T.S.

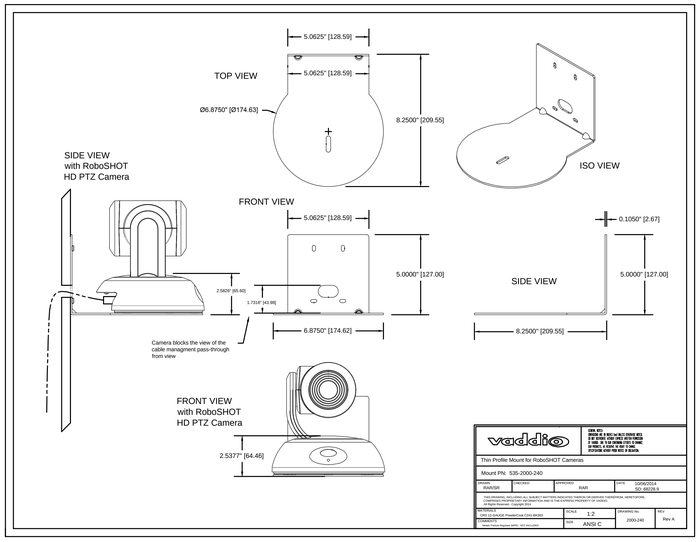

WALL MOUNT DETAIL FOR VADDIO PTZ CAMERAS (4)

N.T.S.

ENGINEER

tk1sc COLLABORATIVE
15231 Laguna Canyon Road, Suite 100
Irvine, California 92618
949.751.5800 www.tk1sc.com
(Project Manager- Scott Tonelson)
tk1sc Job #: 2015-0490

This and all other project documents and all ideas, aesthetics and designs incorporated therein are instruments of service. All project documents are the registered property of tk1sc and cannot be lawfully used in whole or in part for any project or purpose except as described in the contractual agreement between tk1sc and Client. tk1sc hereby gives formal notice that any such project document use, reproduction or modification (misuse) is not only unlawful but automatically binds all parties involved with misuse to fully indemnify and defend tk1sc and tk1sc's Consultants to the maximum legal extent against all losses, demands, claims or liabilities arising directly or indirectly from project document misuse.

Project documents describe design intent of work and are not a representation of as-built or existing conditions. tk1sc and tk1sc's Consultants make no representations concerning the accuracy of documents and are not responsible for any discrepancies between project documents and the existing conditions.

© Copyright 2016

PROJECT

ORANGE COUNTY FIRE AUTHORITY

ONE FIRE AUTHORITY ROAD
IRVINE, CA 92602

ENGINEER'S STAMP

REVISION INFORMATION

REV.	DESCRIPTION	DATE

DATE 03-16-16 DRAWN BY JS
SCALE N.T.S. CHECKED BY SKT

DRAWING TITLE

AUDIOVISUAL SYSTEMS DETAILS

DRAWING No.

AV-601

GENERAL NOTE

1. RACKS ELEVATIONS SHOWN ARE FOR REFERENCE ONLY. AV CONTRACTOR IS RESPONSIBLE FOR DEVELOPING RACK ELEVATIONS AND PROVIDING RACK EQUIPMENT NOT INDICATED IN THE SPECIFICATION OR AVAILABLE IN THE EXISTING RACKS.

25	LOGO	25	43.75
24	WRLSRX1−1 & 1−2	24	42.00
23	CAMRX1−1	23	40.25
22	DSP1−1	22	38.50
21	DSP2−1 / AVBNET1−1	21	36.75
20	PWR1−1	20	35.00
19	SMP1−1 / CNTL1−1	19	33.25
18	ALSMOD1−1	18	31.50
17	CBLRX1−1	17	29.75
16	DTPSWT2−1	16	28.00
15		15	26.25
14		14	24.50
13	STMDCDR1−1	13	22.75
12	BD1−1	12	21.00
11	USBRX1−1 / DTPRX1−2	11	19.25
10	DTPTX1−1 / DTPRX1−1	10	17.50
9	PC2−1	9	15.75
8		8	14.00
7	NETSWHT1−1	7	12.25
6	ALS RX CHARGER	6	10.50
5		5	8.75
4	(OFE)AMP1−1	4	7.00
3		3	5.25
2	DWR1−1	2	3.50
1		1	1.75

AUDIOVISUAL SYSTEMS RACK ELEVATION TRAINING ROOMS 2, 3, 4, 5 TYP. (3)

N.T.S.

44	LOGO	44	77.00
43	VENT−1	43	75.25
42	SMP1−1	42	73.50
41	VENT−1	41	71.75
40	USBBRDG1−1	40	70.00
39	VENT−1	39	68.25
38	OFEPC1−1 (SKYPE)	38	66.50
37		37	64.75
36	VENT−1	36	63.00
35	PWR1−1	35	61.25
34	VENT−1	34	59.50
33	CBLRX1−1	33	57.75
32	TP1−2 SHELF REQUIRED	32	56.00
31		31	54.25
30		30	52.50
29		29	50.75
28		28	49.00
27	VENT−1	27	47.25
26	NETSWHT1−1	26	45.50
25	VENT−1	25	43.75
24	CNTL1−1	24	42.00
23	VENT−1	23	40.25
22	VENT−1	22	38.50
21	VENT−1	21	36.75
20	VENT−1	20	35.00
19	VENT−1	19	33.25
18	VENT−1	18	31.50
17	VENT−1	17	29.75
16	VENT−1	16	28.00
15	XTPSW1−1	15	26.25
14		14	24.50
13		13	22.75
12		12	21.00
11		11	19.25
10		10	17.50
9		9	15.75
8		8	14.00
7		7	12.25
6		6	10.50
5	VENT−1	5	8.75
4	VENT−1	4	7.00
3	DWR1−1	3	5.25
2		2	3.50
1	VENT−1	1	1.75

AUDIOVISUAL SYSTEMS RACK ELEVATION BOARDROOM VIDEO (1)

N.T.S.

44	LOGO	44	77.00
43	VENT−1	43	75.25
42	WRLSRX1−1 & 1−2	42	73.50
41	VENT−1	41	71.75
40	DSP3−1	40	70.00
39	VENT−1	39	68.25
38	DSP4−1	38	66.50
37	VENT−1	37	64.75
36	DSP5−1	36	63.00
35		35	61.25
34	VENT−1	34	59.50
33	PWR1−1	33	57.75
32	VENT−1	32	56.00
31	AVBSWH1−1	31	54.25
30	VENT−1	30	52.50
29	DCSCNTL1−1	29	50.75
28	VENT−1	28	49.00
27	DCSPWR1−1	27	47.25
26		26	45.50
25	VENT−1	25	43.75
24	AREC1−1	24	42.00
23	VENT−1	23	40.25
22	AREC1−2	22	38.50
21	VENT−1	21	36.75
20	OFEPC1−2 (SHURE)	20	35.00
19		19	33.25
18		18	31.50
17	VENT−1	17	29.75
16	VENT−1	16	28.00
15	VENT−1	15	26.25
14	VENT−1	14	24.50
13	VENT−1	13	22.75
12	VENT−1	12	21.00
11	ALS RX CHARGER	11	19.25
10		10	17.50
9		9	15.75
8	DWR1−1	8	14.00
7		7	12.25
6	VENT−1	6	10.50
5	AMP1−1	5	8.75
4		4	7.00
3	VENT−1	3	5.25
2	AMP1−2	2	3.50
1		1	1.75

AUDIOVISUAL SYSTEMS RACK ELEVATION BOARDROOM AUDIO (2)

N.T.S.

44	LOGO	44	77.00
43	VENT−1	43	75.25
42	WRLSRX1−1 & 1−2	42	73.50
41	VENT−1	41	71.75
40	DSP1−1	40	70.00
39	DSP2−1 / AVBNET1−1	39	68.25
38	VENT−1	38	66.50
37	OFEPC2−1	37	64.75
36		36	63.00
35		35	61.25
34	VENT−1	34	59.50
33	PWR1−1	33	57.75
32	VENT−1	32	56.00
31	BD1−1	31	54.25
30	VENT−1	30	52.50
29	CBLRX1−1	29	50.75
28	VENT−1	28	49.00
27	NETSWH1−1	27	47.25
26	VENT−1	26	45.50
25	CNTL1−1	25	43.75
24	VENT−1	24	42.00
23	DTPSWT2−1	23	40.25
22		22	38.50
21		21	36.75
20	VENT−1	20	35.00
19	VENT−1	19	33.25
18	XTPRX1−8	18	31.50
17	VENT−1	17	29.75
16	SMP1−1	16	28.00
15	VENT−1	15	26.25
14	CAMRX1−1	14	24.50
13	VENT−1	13	22.75
12	ALS RX CHARGER	12	21.00
11		11	19.25
10		10	17.50
9	DWR1−1	9	15.75
8		8	14.00
7	VENT−1	7	12.25
6	ALSMOD1−1	6	10.50
5	VENT−1	5	8.75
4	VENT−1	4	7.00
3	AMP1−1	3	5.25
2		2	3.50
1	VENT−1	1	1.75

AUDIOVISUAL SYSTEMS RACK ELEVATION AE117 (3)

N.T.S.

ENGINEER

tk1sc COLLABORATIVE
15231 Laguna Canyon Road, Suite 100
Irvine, California 92618
949.751.5900 www.tk1sc.com
(Project Manager- Scott Tonelson)
tk1sc Job #: 2015-0490

This and all other project documents and all ideas, aesthetics and designs incorporated therein are instruments of service. All project documents are the registered property of tk1sc and cannot be lawfully used in whole or in part for any project or purpose except as described in the contractual agreement between tk1sc and Client. tk1sc hereby gives formal notice that any such project document use, reproduction or modification (misuse) is not only unlawful but automatically binds all parties involved with misuse to fully indemnify and defend tk1sc and tk1sc's Consultants to the maximum legal extent against all losses, demands, claims or liabilities arising directly or indirectly from project document misuse.

Project documents describe design intent of work and are not a representation of as-built or existing conditions. tk1sc and tk1sc's Consultants make no representations concerning the accuracy of documents and are not responsible for any discrepancies between project documents and the existing conditions.

© Copyright 2016

PROJECT

ORANGE COUNTY FIRE AUTHORITY

ONE FIRE AUTHORITY ROAD
IRVINE, CA 92602

ENGINEER'S STAMP

REVISION INFORMATION

REV.	DESCRIPTION	DATE

DATE 01-05-16 DRAWN BY SKT
SCALE N.T.S. CHECKED BY JS

DRAWING TITLE

AUDIOVISUAL SYSTEMS RACK ELEVATIONS

DRAWING No.

AV-501

AUDIOVISUAL SYSTEMS SPECIFICATIONS

PART 1 – GENERAL

1.01 WORK INCLUDED

A. This specification shall apply to all phases of Work hereinafter specified, shown on Drawings, or as required to provide a complete installation of electrical systems for this Project. Work required under this specification, is not limited to just the Audiovisual Systems - refer to Architectural, Electrical, Structural, Landscape, Structural Cabling and/or Mechanical/Plumbing Drawings, as well as all other drawings applicable to this project, which designate the scope of work to be accomplished. The intent of the Drawings and Specifications is to provide a complete and operable Audiovisual Systems that includes all documents that are a part of the Contract.

1. Work Included: Furnish labor, material, services and skilled supervision necessary for the construction, erection, installation, connections, testing, and adjustment of all Audiovisual Systems equipment specified herein, or shown or noted on Drawings, and its delivery to the Orange County Fire Authority (OCFA) complete in all respects functional system ready for use.
2. The Audiovisual Systems Work includes installation or connection of certain materials and equipment furnished by others. Verify installation details, installation and rough-in locations from the actual equipment or from the equipment shop drawings.

B. Audiovisual Systems drawings are diagrammatic, and are intended to convey the scope of work, indicating intended general arrangement of equipment. Follow Drawings in laying out work and verify spaces for installation of materials and equipment based on actual dimensions of equipment furnished.

C. It is the intent of the Drawings and Specifications, for the Contractor to provide and install a complete, fully operational, and tested system.

D. All miscellaneous system components including, but not limited to, plenum cables, speakers, signal converters, interface panels and components, termination equipment, patch panels, backboards, converters, digital video matrix switchers, digital video extenders, controllers, digital signal processors, amplifiers, custom faceplates, mounting hardware, fasteners, racks, cabinets, and any other related items shall be furnished and installed complete under this section, such that the system shall perform all functions listed herein in compliance with all of the specified requirements.

1.02 QUALITY ASSURANCE

A. Design, manufacture, testing and method of installation of all apparatus and materials furnished under requirements of these specifications shall conform to latest publications or standard rules of the following:

1. AES - Audio Engineering Society
2. ANSI - American National Standards Institute
3. BICSI - Building Industry Consulting Service International, Inc.
4. CEDIA - Custom Electronic Design and Installation Association
5. Digital Display Working Group
6. EIA - Electronic Industries Alliance
7. FCC - Federal Communications Commission
8. HDMI Licensing, LLC
9. INFOCOMM - International Communications Industries Association
11. IEEE - Institute of Electrical and Electronic Engineers
12. ISO - International Organization for Standardization
13. ITU -Telecommunication Standardization Sect
14. MPEG - Moving Picture Experts Group
14. NAB - National Association of Broadcasters
15. NEC - National Electrical Code
16. NEMA - National Electrical Manufacturers Association
17. NFPA - National Fire Protection Association
18. NSCA - National Systems Contractors Association
19. CALOSHA - Occupational Safety and Health Administration
20. SMPTE - Society of Motion Picture and Television Engineers
21. TIA - Telecommunications Industry Association
22. UBC - Uniform Building Code

23. UL - Underwriters Laboratories Inc.
24. VESA - Video Electronics Standards Association
25. Local Authority Having Jurisdiction (AHJ) Published Electrical Standards and Codes

B. Perform Work in accordance with the National Electrical Code, applicable building ordinances, and other applicable codes, hereinafter referred to as the "Code." The Contractor shall comply with the Code including local amendments and interpretations without added cost to the OCFA. Where Contract Documents exceed minimum requirements, the Contract Documents take precedence. Where code conflicts occur, the most stringent shall apply unless variance is approved.
   1. Comply with all requirements for permits, licenses, fees and codes. The Contractor, at Contractor's expense, shall obtain all permits, licenses, fees, special service costs, inspections and arrangements required for Work under this contract, unless otherwise specified.
   2. Comply with requirements of the applicable utility companies serving this Project. Make all arrangements with utility companies for proper coordination of Work.

1.03 GENERAL REQUIREMENTS

A. Guarantee: Furnish a written guarantee for a period of (1) one-year from date of acceptance.

B. Wherever a discrepancy in quantity of equipment, cable, devices, etc., (all materials), arises on the Drawing and/or Specifications, the Contractor shall be responsible for providing and installing all material and services required by the strictest condition noted on Drawings and/or in Specifications to ensure complete and operable systems as required by the OCFA and Audiovisual Systems Design Consultant.

C. The contractor shall hold a valid State of California C-7 Low-Voltage license, shall have completed at least 10 projects of equal scope, shall have been in business of furnishing and installing systems of this scope and magnitude for at least five years, and capable of being bonded to assure the OCFA of performance and satisfactory service during the guarantee period.

D. The contractor shall hold all other licenses required by the legally constituted authorities having jurisdiction over the work.

E. All work shall be performed under the supervision of a company accredited by the basic equipment manufacturer and such accreditation must be presented.

F. The installing contractor shall be a factory authorized installer and warrantee station for the brand of equipment offered and shall maintain a fully equipped service organization capable of furnishing adequate repair service to the equipment.

G. All of the equipment in this specification shall be furnished and installed by the Authorized Factory Installer of the equipment. The Contractor shall furnish a letter from the manufacturer of all major equipment, which certifies that the installing contractor is the Authorized Installer and that the equipment has been installed according to factory intended practices. The Contractor shall also furnish a written guarantee from the manufacturer that they will have a service representative assigned to this area for the life of the equipment.

H. All Audiovisual systems equipment supplied shall be listed by Underwriters Laboratories. A copy of the UL listing card for the proposed system shall be included with the contractor's submittal.

I. Personnel: Use adequate numbers of skilled workers who are thoroughly trained and experienced with the specified requirements and the methods needed for proper performance of the AV systems installation work specified herein.
   1. Designated Project Engineer: Provide a designated Project Engineer in responsible charge of the Design, CAD, In-House testing and on the on-site commissioning of the Project during all phases of the work of this specification. This Project Engineer shall hold a current InfoComm CTS-D, and manufacturer certified, and shall be the same individual through the execution of the work unless illness, loss of personnel, or other circumstances reasonably beyond the control of the Contractor intervene.
   2. Technicians shall have at least three (3) years direct experience in similar work. The AV technicians assigned to this project shall be fully trained, qualified and carry valid and current industry

certifications regarding the, installation, operation and testing of Audiovisual Systems. At least one InfoComm CTS-I, and manufacturer certified, shall be assigned as Lead Technician to the project.

3. Custom Control System Programmer: Provide at least one (1) full time programmer on staff, capable of on-site custom programming of the custom remote control system specified herein. Control System Programmer to hold the following certifications: InfoComm CTS and manufacturer certified. A programming Sub-Contractor may be used as long as the Programmer has the certifications as listed above.
4. Designated Project Manager Single Point of Contact: Provide a designated Project Manager in responsible charge and Single Point of Contact on the Project Site during all phases of installation and testing of the work of this specification.
   The Project Manager shall:
   a. Hold current InfoComm CTS-I or CTS, and manufacturer certified.
   b. Initiate and coordinate tasks with OCFA's Project Manager.
   c. Provide day-to-day direction and on-site supervision of Contractor personnel.
   d. Ensure conformance with all Contract provisions.
   e. Participate in weekly site project meetings as needed.
   f. Be the same individual through the execution of the work unless illness, loss of personnel, or other circumstances reasonably beyond the control of the Contractor intervene.

J. All of the equipment in this specification shall be furnished and installed by the Authorized Factory Installer of the equipment with the most current software & firmware package available at the time of installation. At the time of OCFA Acceptance of the installation, all equipment shall include any and all updated software or hardware revisions. In addition, when the software is available in disk format, a backup copy of the most up to date revision, in disk format, shall be handed to the OCFA at the completion of the project.

K. Verifying Drawings and Job Conditions:
   1. This Contractor shall examine all Drawings and Specifications in a manner to be fully cognizant of all work required under this Section.
   2. This Contractor shall visit the site and verify existing conditions. Where existing conditions differ from Drawings, adjustment(s) shall be made and allowances included for all necessary equipment to complete all parts of the Drawings and Specifications.

1.04 WORK IN COOPERATION WITH OTHER TRADES

A. Examine the Drawings and Specifications and determine the work to be performed by the electrical, mechanical and other trades. Provide the type and amount of Audiovisual Systems materials and equipment necessary to place this work in proper operation, completely wired, tested and ready for use. This shall include all additional conduits, boxes and other devices for the required operation sequence of all Audiovisual Systems equipment.

1.05 SPECIFIC AUDIOVISUAL SYSTEM TESTING REQUIREMENTS

A. Furnish all equipment and personnel to conduct these tests in accordance with the performance specification requirements. ANSI and EIA Standards.

B. Contractor will review and assess the appropriate Lens Throw length between the video projectors and the projection screens to ensure optimum picture sizing and focus. Make all adjustments necessary, including projector keystone correction and lens shift to achieve the image size and shape required.

C. Provide full video projector calibration and adjustments for optimal picture quality for all used inputs. Provide proper aspect ratio configuration for 4:3, 16:9 and 16:10 sources. Set all projector configuration presets required for control system recall coordination, and provide with final system documentation.

D. Provide full flat panel monitor display calibration and adjustments for optimal picture quality for a single HDMI, DP or DVI-D input. Provide proper aspect ratio configuration for 4:3, 16:9 and 16:10 sources. Use a test generator (I.E. Extron, VTG Series or equal): for all setup verification, and verify proper image configuration with the all inputs. (Contract the OCFA's Technical Representative prior to final adjustment to coordinate).

E. Controls: Adjust all controls to achieve the specified performance. Provide shaft-locks or covers for all level controls, as appropriate to prevent unauthorized gain changes. Audiovisual Contractor will confirm that all control system operations are properly programmed and repeatable.

F Testing Report: Provide a letter/report documenting the results of these preliminary tests, including amplifier gain/level settings, DSP EQ filter settings, and AV equalization curves for review by the AV Design Consultant.

G. See wiring device section of this specification for wiring device plate cover labeling requirements.

H. See drawings for panel board schedule directory installation requirements.

I. See conduit installation section of this specification for conduit labeling requirements.

1.06 FINAL INSPECTION AND ACCEPTANCE

A. After all requirements of the Specifications and/or the Drawings have been fully completed, representatives of the OCFA will inspect the work. Contractor shall provide competent personnel to demonstrate the operation of any item or system to the full satisfaction of each representative.

B. Final acceptance of the work will be made by the OCFA after receipt of approval and recommendation of acceptance from each representative.

1.07 RECORD DRAWINGS

A. Drawings of Record: The Contractor shall provide and keep up-to-date, a complete record set of drawings. These shall be corrected daily and show every change from the original Drawings. This set of prints shall be kept on the job site and shall be used only as a record set. This shall not be construed as authorization for the Contractor to make changes in the layout without definite instruction in each case. Upon completion of the work, a set of reproducible Contract Drawings shall be obtained from the General Contractor and all changes as noted on the record set of prints shall be incorporated thereon with black ink in a neat, legible, understandable and professional manner. Refer to the Supplementary General Conditions for complete requirements.

1.08 APPROVALS, EQUALS, SUBSTITUTIONS, AND ALTERNATIVES

A. Approvals: Where the words (or similar terms) “approved”, “approval”, “acceptable”, and “acceptance” are used, it shall be understood that acceptance by the OCFA, Architect and Audiovisual Systems Design Consultant are required.

B. Equal: Where the words (or similar terms) “equal”, “approved equal”, “equal to”, “or equal by”, “or equal” and “equivalent” are used, it shall be understood that these words are followed by the expression “in the opinion of the OCFA and Audiovisual Systems Design Consultant.” For the purposes of specifying products, the above words shall indicate the same size, made of the same construction materials, manufactured with equivalent life expectancy, having the same aesthetic appearance/style (includes craftsmanship, physical attributes, color and finish), and the same performance.

C. Substitution: For the purposes of specifying products “substitution” shall refer to the submittal of a product not explicitly approved by the construction documents/specifications.
   1. Substitutions of specified equipment shall be submitted and received by OFCA and the Audiovisual Systems Design Consultant ten (10) days prior to the bid date for review and written approval. Regulatory Agency approval for all substitutions will be the sole responsibility of the Contractor. To receive consideration, requests for substitutions must be accompanied by documentary proof of its equality with the specified material. Documentary proof shall be in letterform and identify the specified values/materials alongside proposed equal values/materials. In addition, catalog brochures and samples, if requested, must be included in the submittal.
   2. In the event that written authorization is given for a substitution, after award of contract, the Contractor shall submit to OFCA and Audiovisual Systems Design Consultant quotations from suppliers/distributors of both the specified and proposed equal material for price comparison, as well as a verification of delivery dates that conform to the project schedule.
   3. In the event of cost reduction, the OCFA will be credited with 100 percent of the reduction, arranged by Change Order.
   4. The Contractor warrants that substitutions proposed for specified items will fully perform the functions required.

D. Alternates/Alternatives: For the purposes of specifying products, “alternatives/alternates” may be established to enable the OCFA/Architect/ Audiovisual Systems Design Consultant to compare costs where alternative materials or methods might be used. An alternate price shall be submitted in addition to the base bid for consideration. If the alternate is deemed acceptable, written authorization will be issued.

1.09 SHOP DRAWINGS/SUBMITTALS

A. Shop Drawings/Submittals shall be submitted in digital sets accompanied by Letter of Transmittal, which shall give a list of the number and dates of the drawings submitted. Drawings shall be complete in every respect and bound in sets.

B. The Shop Drawings/Submittals submitted shall be marked with the name of the project, numbered consecutively and bear the approval of the Contractor as evidence that the Contractor has checked the Drawings. Any Drawings submitted without this approval will be returned to the Contractor for resubmission.

C. If the shop drawings show variations from the requirements of the Contract because of standard shop practice or other reasons, the Contractor shall make specific mention of such variations in the Contractor’s letter of transmittal. If the substitution is accepted, the Contractor shall be responsible for proper adjustment that may be caused by the substitution. Samples shall be submitted when requested.

D. Only products listed as “Equal” within the contract documents, along with formally approved “Substitutions” will be reviewed. Products not conforming to these items will not be reviewed and will be returned to the Contractor for re-submittal.

E. Review comments used in response to shop drawings/submittals are:
1. “No Exception Taken” - Product approved as submitted.
2. “Furnish as Corrected” - Re-submittal not required, although the Contractor shall provide the submitted product with corrections as noted.
3. “Revise And Resubmit” - Re-submittal required with corrections as noted.
4. “Rejected” - Re-submittal required based upon the originally specified product.

F. Shop drawings shall be submitted on the following but not limited to:
1. AV system diagram.
2. Equipment Rack Elevation
3. Instructor Station.
4. Touch Panel Layouts and pages
5. All other products called out on drawings that call for shop drawing submittal.

PART 2 – SYSTEM EQUIPMENT SPECIFICATION

2.01 MATERIALS

A. Materials and Equipment: All AVS materials and equipment, including custom-made equipment, shall be new and shall be listed by Underwriter's Laboratories (UL) and bear their label or be listed and certified by a Nationally Recognized Testing Lab (NTRL) that is also recognized by the local Authority-Having-Jurisdiction (AHJ).

2.02 SYSTEM FUNCTIONS AND CAPABILITIES:

A. The AVS shall be utilized for presenting, viewing and listening to multimedia presentations. The system shall utilize/integrate where indicated, computer, microphone, and other inputs for output to DLP/LCD Projectors, LCD/LED Displays, and Sound Reinforcement Systems. The AV system shall be controlled by either a Touch Panel interface with control system processor. The control system shall be able to control the all functions of the AV equipment, Audio Volume, digital media switching, Projectors. The AVS shall be integrated into lighting control systems, where required on plans. See AV drawings for more detailed information regarding specific system functionality.

B. The AVS shall provide clear, natural sound uniformly distributed throughout the designated areas. The system shall utilize speakers as shown on the plans. These quantities shall be considered as the minimum quantity required. The AV system shall also be able to display High Definition Video to the Native Resolution of all displays without any distortion or artifacts.

C. The system shall have adequate dynamic range without audible clipping or distortion to accommodate all types of program material. Audio, Digital Signal Processing shall be employed in the designated rooms to insure smooth frequency response, high acoustical gain before feedback. When at maximum level, the system shall operate without audible distortion, rattles and buzzes. All switching shall be silent and without pops and or transients.

D. The system frequency response shall be within +/- 2dB from a curve which is flat from 80Hz to 4kHz and decreasing 3dB per octave from a relative level of 0 dB from 4kHz to 10kHZ. There shall be a minimum 12dB roll-off above 10 kHz and below 63 Hz. Uniformity of coverage of the system at seated ear height (42") shall be within +/- 3dB in the 4kHz 1/3 octave band at any seat location using pink noise as a test signal.

E. System noise shall not exceed an equivalent input noise of -120dB based on a 20KHz-noise bandwidth. The predominant noise component in the system output under any operating condition shall be that of the input stage.

F. The sound level capability of program material levels produced in all seats shall be at least 75dB when measured with a scaled filter. There shall be at least 6dB of amplifier headroom.

G. The system shall provide clear audio to all areas covered by the system. Each side, Left & Right shall be wired discretely to the correct channel on the amplifier. See AVS drawings for exact location.

H. EDID and Color Space Management. EDID data exchange is a standardized means for a display to communicate its capabilities to a source device. It is the AV contractor's responsibility to address and resolve and manage all EDID and Color Space issues.

I. HDCP (High-bandwidth Digital Content) is an encryption protocol for copy protected video content as Blu-Ray Disc, HD movie downloads, Cable TV & Satellite TV. It is the Contractor's responsibility for proper HDCP and Digital Rights Management (DRM) in all systems listed in plans and this specification.

J. CEC (Consumer Electronics Control) is device control functions between all connected HDMI devices. It is the AV contractor's responsibility for proper CEC Management in all systems listed in plans and this specification.

2.03 SOFTWARE PROGRAMMING

A. General: Except when otherwise agreed in writing the OCFA shall retain legal and beneficial ownership of all Intellectual Property, including source code, created by the Contractor, their employees and sub-contractors.

B. The Contractor must allow sufficient time for the programming of all software configurable audio, video and control systems. Contractors must evaluate the systems functional requirements and user interface and then allow time in their bid accordingly. The system description as well as the end user interview will provide the Contractor with the necessary information needed to proceed with the programming. Any questions as to the systems functional requirements must be sent in written RFI form to the Consultant. All programming schemes must be submitted to the Consultant for approval before programming starts. This includes the appearance of all user interfaces, touch panel layouts, preset and sub-preset information (acquired through OCFA interviews), and speaker control schemes. The Contractor will also submit a narrative for the control system concept to the Consultant for approval. The Contractor is to interview the OCFA and their representatives to acquire the necessary information needed to allow for the proper programming of this system. The Contractor, after interviewing the OCFA, will then submit a written report stating his interpretation of the OCFA's requirements for approval by Consultant. Only after the OCFA and Consultant have approved the programming report may the Contractor proceed with the programming of this system.

C. All equipment that is connected to OCFA's local area network and is configurable via the local area network must have its equipment software installed onto dedicated computers provided by OCFA. The Contractor is to allot time to install and test equipment software onto a minimum of two of OCFA's computers which are to be identified by OCFA and/or Consultant. The computers will be programmed to emulate user interfaces throughout the facility. The Contractor shall coordinate all software deployment over IP with OCFA's Information technology department.

D. A user-friendly/easy to use graphical interface programmed by the Contractor will allow for easy operation of the system. This interface shall allow novice users the control of main system components without having to access the digital schematic diagram. These main system components will include master volume control, zone volume control, room combining, routing, switching, source-equipment level control and any other control necessary for the system to function properly from a user standpoint.

E. Control system minimum programming outlined below:
1. The Contractor shall allot as many hours as required for on-site control system programming with OCFA's representative.
2. The Control System in this project shall connect to OCFA's Local Area Network (LAN). This connection will provide desktop computers control of the audio-visual system as well as make available remote troubleshooting via the internet and manufacturer software. The Contractor shall provide time to install control system interface software on at least three desktop computers. Coordinate work with OFCA's Information Services personnel.
3. Provide password protection to each control surface in this facility.
4. Touch panels shall be activated and deactivated by password. Upon start up a password dialog box shall be presented to the user to enter his/her password. Only after entering a password will the user have access to the system. The system shall be programmed to shut down automatically after being idle for a time to be specified by the user.
5. Touch panel layout design will conform to the InfoComm International "Dashboard for Controls" and manufacturer's programming guidelines. Touch panel designs are to be custom to this project. Re-purposed touch panel designs are not acceptable.
6. Control Help File: Each touch panel will include a help file that will explain each layer of the touch-panel control scheme.
7. Control system shall utilize help desk software to provide:
   a. Real-time monitoring of: Control system, Device monitoring, Projector lamp life, System online status, Room activity, Remote system diagnostics via Contractors help desk, Remote system control, Fault reporting via email alert, logging of help request, User access control via password protection, Event logging, report and chart generation.
8. All serial controlled devices must have bi-directional communication with the control system. All control functions locally available on each device must be accessible via the remote control system. All locally gestured control functions must mirror on the control system user interface. In other words, if a volume control is adjusted on a DSP interface that adjustment must register on the control interface.
9. Control system shall be used to power up and down connected equipment.
10. All projectors shall be monitored and report lamp hours remaining and lamp failure.

F. Complexity of Programming:
1. It is required that the Contractor be experienced in manufacturer's programming and programming systems of this complexity. Contractors shall allow enough time in their bid to permit extensive programming of all software configurable audio, video and control systems to the requirements of OCFA and consultant. Contractor shall break out cost associated with programming of these systems for review by the Consultant. By submitting this bid, the Contractor agrees that they understand systems of this type and that all programming services are included to the satisfaction of the Consultant. The Contractor further agrees that they will not make any claim for additional monies because of misinterpretation of programming requirements.

2.04 AUDIO VISUAL SCOPE OF WORK

A. This project is an upgrade in technology to the existing functioning AV systems in the rooms listed below. Some of the existing infrastructure shall be re-used after testing and verifying the functionality, a document with test results shall be provided for review by the OCFA and Consultant before the existing system is de-commissioned. Some of the existing analog cables shall be removed by the AV contractor before installing new cabling. The existing equipment except where noted shall be removed from the system and provided to the OCFA for their re-use, inventory, or disposal.

1. Boardroom
   a. The AV presentation system shall have the existing Draper screens receive a new replacement screen fabric on a roller with a 16:10 aspect ratio installed behind the Dais; and a new complete replacement screen with white metal case and 16:10 aspect ratio, located behind the audience seating. This screen shall require an additional 30" of black drop. The existing screen control cables shall be re-used and must be tested and verified by Contractor. There shall be two (2)

new 3-LCD panel, 6,500 ANSI lumen, 1920 x 1200 resolution, and projectors. The new projectors shall be installed at the same location as the existing projectors, above the center ceiling disc. Refer to AV drawings for more information. The displays in the rooms shall have a scaling receiver set to the correct resolution for each display/projector where indicated on the AV single line drawings. The analog video cables feeding the projectors shall be removed by the AV contractor and replaced with new digital shielded twisted pair cables with shielded connectors.

b. The Dais display monitors will be replaced with fifteen (15) new 20" LED displays with height adjustable stands, 1920 x 1080 resolution (16:9 aspect ratio). New scaler receivers feeding the HDMI 1 x 6 distribution amplifiers located at the Dais to be set to the appropriate output resolution will drive the displays. These will be replacing the existing monitors. Contractor will remove the existing analog video cables before installing the new digital shielded, twisted pair cables with shielded connectors. The base of the new displays shall set down into the existing openings in the Dais top, no cutting of the Dais top shall be required.

c. There will be two 65" professional LED displays wall mounted behind the Dais at either end on the small walls, see tea v drawing for actual locations and mounting height.

d. The existing analog computer and video inputs in the floor boxes (in front of the staff tables, under the Dais) and wall plates shall be replaced with new digital transmitters for connection to the new digital video matrix. The cables at the locations shall be removed by the AV contactor.

e. The audio system shall be updated with new digital signal processor (DSP) mixers with Audio Video Bridge (AVB) connections and a stand-alone AVB network and AVB switch for connections between mixers. The delegate microphone and voting system using, data cabling with RJ-45 connectors, provided by the manufacture, to interconnect each microphone station on the Dais and staff tables. The main cables to the Dais and staff tables will need to be bulk cable pulled and terminated per the manufactures termination instructions in the system manual.

f. There shall be two (2) digital audio recording devices.

g. The existing analog microphone inputs in the floor boxes and cabling shall be re-used as a back-up microphone system, these floor box input plates and cable shall be tested, verified and documented for proper operational parameters.

h. There shall be two (2) new "Press Feed" XLR-F output plates located at the existing wall boxes with the wall plates with BNC connector located on the walls at the ends of the Dais on the audience side of the wall. The new "Press Feed" plates shall use the existing cable path back to the AV racks.

i. The existing speaker system, shall be used for sound re-enforcement in the room. The speaker system will consist of existing wall mounted Renkus-Heinz loudspeaker over the Dais aimed at the audience seating and recessed Tannoy ceiling speakers along with existing QSC Audio amplifiers. The amplifiers shall be removed and sent to the manufacture (QSC Audio, Costa Mesa) for cleaning, inspection and refurbishing and then replaced in equipment rack. The entire speaker system, including amplifiers, and speakers shall be fully tested and verified to manufacturers specifications. The existing speaker cables shall be replaced with new 16/2 plenum speaker cable.

j. The system shall be set up for audio conferencing using the existing analog telephone connections. The conferencing system shall have a VoIP connection provided for the future upgrade. The telephone system VoIP connection shall not be made on Day 1.

k. There shall be two (2) new digital wireless microphone systems provided. Existing wireless microphone system, located in AV tech booth, shall be removed. The wireless microphone antennas shall be remote mounted above the drop tile ceiling behind the Dais see AV drawings for the location.

l. The podium shall have a new analog goose neck microphone. There are existing cabling for the podium microphone that will need to be fully tested, verified and documented.

m. There shall be a remote “Mute” button on the Dais at the Chairman’s position to allow the Chairman to mute the microphone during a meeting. The wiring of the Mute button the DSP Logic port shall require custom wiring, the wiring requirement shall be provided. The cable for the Mute button at the Chairman’s seat may be able to pass through the existing monitor opening in the Dais top so no additional hole will be required in the Dais top.

n. The existing Assistive Listening System (ALS), Sennheiser mfg. shall be re-used. There is a replacement infrared (IR) emitter that shall replace a missing unit at the left side of the Dais as you face the Dais. New neck loop (inductive loop) receivers will be added to update the inventory of existing receivers.

o. There shall be a new delegate microphone system with microphone stations at each seat on the Dais and staff tables. These microphone stations shall have a built-in speaker and headphone jack with volume level control for people with a hearing impairment. There shall be lightweight headphones provided for those individuals who have a hearing impairment and wish to control the volume level heard through the headphones.

p. There shall be a new electronic voting system provided with hand held voting devices at each seat on the Dais. There shall be two custom wall display panels that shall display up to fifteen (15) board member’s names and their voting results once tabulated by the clerk. The displays panels shall be located on the left side wall as you face the Dais. The panels shall be mounted at a height to provide an un-obstructed view over the board members heads from the Dais and for the audience seating.

q. The existing P/T/Z camera mounted to the wall outside of the AV booth shall be replaced by four (4) new pan, tilt, zoom (P/T/Z) cameras, two (2) cameras shall be ceiling mounted behind the Dais and two (2) shall be mounted to the wall outside of the AV booth. One camera will be for replacing the existing rear wall mounted cameras. A second camera shall require an in-wall box and conduit path into the AV booth, this shall be provided by the OCFA. The switched camera signal shall be sent to the video matrix system for routing to all of the displays and projectors. Control of the camera system shall be from the AV control booth.

r. The existing control system shall be removed and replaced by the AV Contractor with a new updated control system. The control system shall communicate through a dedicated network switch to devices with LAN ports and direct to devices with RS232, IR, and relay connections. The control system shall control all system functionality – On/Off, display On/Off, screen Up/Down, volume Up/Down/Mute program and microphones, Delegate system volume level, source input selection, camera video signal routing, and lighting preset selection, from any of the control panels. The control system shall be able to mute (go to black) the video images on the projectors and Dais displays separately. There shall be a “Podium Microphone Mute” button at the Chairman’s position on the Dais to “Mute” the podium microphone when required by the Chairman; this will be wired directly to the DSP Mixer Logic input, the status shall be reflected on the main control panels and can be overridden when required.

s. There shall be a 10” touch panel in a rack on a shelf, 10” table top touch panel for the clerk’s position on the staff table, and a 12” table top touch panel in the AV Booth.

t. The existing two (2) full height AV equipment racks shall be re-used for the new AV system. The racks are located in the storage room behind the Dais. The existing power distribution system shall be inspected for load capabilities. The existing power conditioners/strips shall be replaced.

u. There shall be two dedicated OFCI PCs in the AV racks, one shall be connected to the delegate microphone/voting system and the second shall be used for video conferencing using a Skype type software and the use of a USB bridging interface.

v. There shall be an H.264 streaming media processor provided and connected to the OCFA’s network and new video system for recording and streaming of meetings as required.

w. The Boardroom’s Lutron lighting control system shall be used to control the lighting scenes in the boardroom with an RS232 control connection.

x. The center ceiling disc in the Boardroom shall require acoustic treatment to the underside of the disc to reduce the echo in the middle of the room. The AV contractor shall be responsible for the ordering and installation of the acoustic treatment. The acoustic treatment shall have a finish (color) that shall match or blend with the existing ceiling color; the AV contractor and OCFA shall review the material finish options before ordering.

2. AV Control Room
   a. The existing wireless microphone systems shall be replaced by the new digital microphone systems in the main equipment racks.

   b. The existing video playback equipment shall be removed and replaced with a Blu-Ray disk player (RS232 controlled).

   c. The analog XLR audio inputs in the AV control booth shall be re-used for connectivity to the audio system, these connections shall be tested and verified.

   d. A new Camera Control Unit (CCU) for the new cameras shall have a 22" LCD touch display with connections for HDMI and RS232 control shall be located in the booth. There shall be a desk stand with three (3) display mounts. There shall be two 20" displays, one for monitoring and controlling the delegate microphone system, the second for monitoring the video programming and serve as a preview monitor, the third monitor shall be the 22" camera system monitor. There shall be a local three (3) input AV switcher with one (1) VGA/stereo audio and two (2) HDMI inputs for that shall be connected to the digital video switching system.

   e. The ALS receivers shall be stored and charged in the booth.

   f. Two (2) wireless keyboards/touch pad with 50' minimum range and operates in the RF frequency range shall be connected to the computers in the AV racks.

   g. There shall be a rack mounted 1RU speaker provided to allow monitoring of the audio in the Boardroom, this input shall be able to be selected from the control panel.

3. Classroom/Break-out Room AE-117
   a. This room shall server as an "Overflow" room for the Boardroom and as a Training classroom.

   b. The existing projector shall be removed and replaced with a new projector with 3 LCD panels, 5000 ANSI lumen, (1920 x 1200 resolution) and 16:10 aspect ratio. The existing manual 80" wide screen shall be used in this room for the projection surface, the image shall fill the screen image area left to right, a white area is acceptable, it would be preferred for the white area be at the bottom of the image. The AV contractor is responsible for confirming the throw distance for the new projector and lens and relocating the projector mount if required. There shall be a HDMI twisted pair receiver at the projector set the solution for the projector.

   c. There are two floor boxes, one with microphone inputs in one that shall be tested and verified. The second floor box has an analog computer input plate that shall be removed and replaced by a digital input plate with HDMI and VGA/stereo audio connections with a digital connection to the AV switcher. There are two wall plates to the left of the screen with the same inputs as the floor boxes that will be connected to the AV system.

   d. The existing analog video cables shall be removed by the AV contractor before installing the digital shielded twisted pair cable and shielded connectors.

   e. The existing speaker system includes recessed Tannoy ceiling speakers and a QSC Audio amplifier. The amplifier shall be removed and sent to the manufacture (QSC Audio, Costa Mesa) for cleaning, inspection and refurbishing and then replaced in equipment rack.

   f. The entire speaker system including amplifiers, and speakers shall be tested and verified. The existing speaker cables shall be replaced with new 16/2 plenum speaker cable.

   g. There shall be a new DSP mixer for the microphone inputs and program audio inputs.

   h. There shall be two new digital wireless microphone systems installed.

i. The existing video switching system shall be replaced with a digital scaling video matrix switcher with shielded twisted pair inputs and outputs with shielded connectors in addition to HDMI inputs.

j. The existing ALS system shall be re-used. It is the AV contractor's responsibility to test and verify the functionality of the system. New neck loop (inductive loop) receivers will be added to update the inventory of existing receivers.

k. The existing control system shall be removed and replaced. The new system shall communicate through a dedicated network switch to devices with LAN ports and direct RS232, IR, and Relay connections for equipment.

l. There shall be a 12" table top touch panel located on the podium.

m. The control system shall control all system functionality – On/Off, display On/Off, screen Up/Down, volume Up/Down/Mute program and microphones, and "Mute" the projector image.

n. The existing full height rack located in the storage room at the back of the room shall be re-used.

o. The existing power distribution system in the rack shall be inspected, the power conditioners/strips shall be replaced.

p. There shall be a new wall mounted P/T/Z camera at the back of the room. There is an existing in-wall box to be used for cabling. The camera shall be controlled from the touch panel.

q. There shall be a direct HDMI input from the boardroom system using shielded twisted pair cable and HDMI receiver.

r. There shall be a H.264 streaming media processor provided and connected to the video system and OCFA's network for recording and streaming meetings when required.

s. There are no lighting control requirements in this room.

4. Classrooms 153 & 154

a. Each classroom shall have identical AV systems as follows, and the systems shall be interconnected for use when combined.

b. The existing projector shall be removed and replaced with a new projector with 3 LCD panels, 5000 ANSI lumen, (1920 x 1200 resolution) and 16:10 aspect ratio. The existing manual 80" wide screen shall be used in this room for the projection surface, the image shall fill the screen image area left to right, a white area is acceptable, it would be preferred for the white area be at the bottom of the image. The AV contractor is responsible for confirming the throw distance for the new projector and lens and relocating the projector mount if required. There shall be a HDMI twisted pair receiver at the projector set the solution for the projector.

c. There is an existing LED/LCD display that shall be connected to the AV system as a second display device.

d. There are three floor boxes with microphone inputs in room 153 and one in 154 that shall be tested and verified.

e. The second floor box has an analog computer input plate that shall be removed and replaced by a digital input plate with HDMI and VGA/stereo audio connections with a digital connection via shielded twisted pair cable with shielded connectors to the AV switcher. The existing analog video cables shall be removed by the AV contractor before installing the digital shielded twisted pair cable. Classroom 154 shall have one (1) floor box with for AV input plate, classrooms 153 shall have three (3) floor boxes with AV input plates.

f. The existing speaker system including the recessed Tannoy ceiling speakers.

g. The existing QSC Audio amplifier shall be removed and sent to the manufacture for cleaning and inspection to confirm it is in optimum operating condition.

h. The speaker system including amplifiers, and speakers shall be tested and verified. The existing speaker cables shall be replaced with new 16/2 plenum speaker cable.

i. There shall be a new digital DSP mixer with expansion module for the microphone inputs and program audio inputs, there shall be two new digital wireless microphone systems installed.

j. The existing video switching system shall be replaced with a digital scaling video matrix switcher with shielded twisted pair inputs/outputs and HDMI inputs.

k. The existing ALS system shall be re-used. It is the AV contractor's responsibility to test and verify the functionality of the system. New neck loop (inductive loop) receivers will be added to update the inventory of existing receivers.

l. The existing control system shall be removed and replaced by the AV contractor with a new system that shall communicate through a dedicated network switch to devices with LAN ports and direct RS232, IR, and relay connections for equipment without LAN connections.

m. There shall be a 12" table top touch panel located on the podium. The control system shall control all system functionality – On/Off, display On/Off, screen Up/Down, volume Up/Down/Mute program and microphones, "Mute" the projectors image, input selection, camera and video signal routing.

n. The existing half height rack located in the millwork behind the podium location shall be re-used.

o. The existing power distribution system in the rack shall be inspected, the power conditioners/strips shall be replaced.

p. There shall be a new ceiling mounted P/T/Z camera in the middle of the room. The camera shall be controlled from the touch panel.

q. There shall be a H.264 streaming decoder, network connected, for receiving streamed signal from the Boardroom AV system.

r. There shall be a H.264 streaming media processor provided and connected to the OCFA's network and digital video switching system for recording and streaming meetings when required.

s. There are no lighting control requirements in this room.

5. Training Rooms D106 & D107

a. Each classroom shall have identical AV systems as follows, and the systems shall be interconnected for use when combined.

b. The existing projector shall be removed and replaced with a new projector with 3 LCD panels, 5000 ANSI lumen, (1920 x 1200 resolution) and 16:10 aspect ratio. The existing manual 80" wide screen shall be used in this room for the projection surface, the image shall fill the screen image area left to right, a white area is acceptable, it would be preferred for the white area be at the bottom of the image. The AV contractor is responsible for confirming the throw distance for the new projector and lens and relocating the projector mount if required. There shall be a HDMI twisted pair receiver at the projector set the solution for the projector.

c. There is an existing LED/LCD display that shall be connected to the AV system as a second display device.

d. There are two floor boxes, one with microphone inputs in one that shall be tested and verified.

e. The second floor box has an analog computer input plate that shall be removed and replaced by a digital input plate with HDMI and VGA/stereo audio connections with a digital connection via shielded twisted pair cable with shielded connectors to the AV switcher. The existing analog

video cables shall be removed by the AV contractor before installing the digital shielded twisted pair cable. Classroom 154 shall have one (1) set of floor box inputs for microphone and AV input plate, classrooms 153 shall have three (3).

f. The existing speaker system including the recessed Tannoy ceiling speakers.

g. The existing QSC Audio amplifier shall be removed and sent to the manufacture for cleaning and inspection to confirm it is in optimum operating condition.

h. The speaker system including amplifiers, and speakers shall be tested and verified. The existing speaker cables shall be replaced with new 16/2 plenum speaker cable.

i. There shall be a new digital DSP mixer with expansion module for the microphone inputs and program audio inputs, there shall be two new digital wireless microphone systems installed.

j. The existing video switching system shall be replaced with a digital scaling video matrix switcher with shielded twisted pair inputs/outputs and HDMI inputs.

k. There shall be a new ALS system. New receivers with headsets and neck loop (inductive loop) receivers will be required for these rooms.

l. The existing control system shall be removed and replaced by the AV contractor with a new system that shall communicate through a dedicated network switch to devices with LAN ports and direct RS232, IR, and relay connections for equipment without LAN connections.

m. There shall be a 12" table top touch panel located on the podium. The control system shall control all system functionality – On/Off, display On/Off, screen Up/Down, volume Up/Down/Mute program and microphones, "Mute" the projectors image, input selection, camera and video signal routing.

n. The existing half height rack located in the millwork behind the podium location shall be re-used.

o. The existing power distribution system in the rack shall be inspected, the power conditioners/strips shall be replaced.

p. There shall be a new ceiling mounted P/T/Z camera in the middle of the room. The camera shall be controlled from the touch panel.

q. There shall be a H.264 streaming decoder, network connected, for receiving streamed signal from the Boardroom AV system.

r. There shall be a H.264 streaming media processor provided and connected to the OCFA's network and digital video switching system for recording and streaming meetings when required.

s. There are no lighting control requirements in this room.

2.05 AUDIO/VISUAL SYSTEM PRODUCTS

The system shall utilize Audiovisual System products as shown on the Plans and listed below. These products shall be considered to be the minimum quantity, performance, functionality and quality levels. If additional and/or upgraded components are needed to meet the performance requirements of this specification, the Contractor shall include all costs for such added and/or upgraded components in the base bid. Part numbers and brands provided are for reference only and do not limit the bidders from submitting alternatives for review and evaluation.

A. Boardroom

1. Digital Video Equipment

a. PROJ1-1 & PROJ1-2

Filter: Long lasting eco filter (up to 15,000 hours)

Brightness: 6,001 to 8,000 lm

Diagonal Screen Size: 1.02-10.16 m (40-400 in),1.52-10.16 m (60-400 in) with the ET-ELW22, 16:10 aspect ratio

Technology: LCD, highly durable optical engine with inorganic LCD panels and polarizers providing up to 10,000 hours of maintenance free service.

Resolution: WUXGA, 1920 x 1200

Lens: Standard or as needed

Provide:

2-Each, Panasonic PT-EZ770ZU, 6500 ANSI Lumen, 3 LCD, 1920 x 1200 Resolution, 16:10, w/digital link. – Or Equal

2-Each, Panasonic ET-LAE300, lamps. – Or Equal

2-Each, Panasonic ET-REF300, Filters. – Or Equal

b. Mounts

Provide:

2-Each, Chief Mfg. RPMA302, projector mount. – Or Equal

c. SCN1-1

Provide:

1-Each, Draper Access/V Screen (No Case), 136-3/4" Diagonal Custom 16:10 *Xt1000vb, Matt White Black Backed, Viewing Area: 72-1/2 height X 116 width, Total Top Drop = 4" Black, **Required Minimum Steel Case Construction, Case Length = 143", 115 VAC Motor *Hook up Left, (Dias Side) Large Projection Screen, motorized. – Or Equal

d. SCN2-1

Provide:

1-Each, Draper Premier Electric Screen 94-1/4" Diagonal Custom, 16:10, *Xt1000vb, Matt White, Black Backed Viewing Area: 50 height X 80 width, Total Top Drop = 30" Black, *Small White Case 97-7/8" Overall Length, 115 VAC Motor, *Hook up Left, (Audience Side). – Or Equal

e. LVC1-1

Provide:

1-Each, Draper, Low Voltage Motor Controller, included in screen part number for the Premier screen – Or Equal

f. DISP1-1-DISP1-17

LED Display

Color: Black

Diagonal Viewing Size: 19.5 inch

Aspect Ratio: Widescreen (16:10)

Panel Type, Surface In-Plane Switching

Optimal Resolution: 1440 x 900 @ 60Hz

Contrast Ratio: 1000:1 (typical)

Brightness: 250 cd/m² (typical)

Response Time: 8 ms typical. 6 ms fast mode. GTG

Viewing Angle: 178° vertical / 178° horizontal

Color Support: 16.7 million colors

Pixel Pitch: 0.2915 mm x 0.2915 mm

Backlight Technology: LED

Stand: Flat Panel Mount Interface, VESA (100 mm)

Connectivity: DP 1.2, VGA, 2 x USB2

Adjustability: Tilt, Swivel, Pivot, Height Adjust

Provide:

17-Each, Dell P2016, 20" LED monitor with adjustable height stand, 16:10, 1280 x 800, LED Display. (15 displays for Dias, 2 displays for AV Tech Room) – Or Equal

1-Each, Single Arm Desk Mount, Chief Mfg. KCS320B , Triple Monitor (for AV Tech Room) – Or Equal

g. DISP2-1 and DISP2-1

Screen Size: 65"

Panel Technology: 60Hz D-LED BLU

Resolution: 1920x1080

Aspect Ratio: 16:9

Brightness: 450 nit

Contrast Ratio (Typical): 5000:1

Viewing Angle (H/V): 178:178

Response Time: 6ms

Connectivity

Input: VGA (D-Sub 15 Pin), DVI-D(HDMI Common), Display Port 1.2, HDMI1 Component/Composite, Stereo mini Jack, USB 2.0 x 1

Output: DP1.2 (Loop-out), Stereo mini Jack

External Control: RS232C (In/Out) thru Stereo Jack, RJ47

Sensor: IR, Ambient Light

Provide:

2-Each, Samsung DM65E, 65” LED display, Landscape Mounted. – Or Equal

2-Each, display thin wall mount, Chief, RLF2. – Or Equal

h. DISP3-1

LCD Panel: 22” TFT Color LCD

Resolutions: 1080/60p & 1080/50p

Touch Screen Type: 5-Wire Resistive Touch

Control Interface: RS-232 (DB-9F)

Video Format: Input DVI-D

Aspect Ratio: 16:10

Brightness: 300 nit (cd/m2)

Contrast Ratio: 1000:1

Pixel Pitch: 0.282mm

Viewing Angle: 170° (H) x 160° (V)

Provide:

1-Each, Vaddio Teletouch 22”, 999-5520-022, 22" LCD touch display, (used with Camera Production VIEW HD MV.) – Or Equal

i. XTPSWT1-1

50 Gbps digital backplane supports an 8K future

RS‑232 insertion from the Ethernet control port

Supported HDMI specification features include data rates up to 18 Gbps, Deep Color up to 12‑bit, 3D, and HD lossless audio formats

HDCP compliant

SpeedSwitch® Technology provides exceptional switching speed for HDCP-encrypted content

EDID Minder® automatically manages EDID communication between connected devices

Key Minder® continuously verifies HDCP compliance for quick, reliable switching

Automatic color bit depth management

Audio breakaway

Automatic output reclocking

Internal color bars test pattern with or without audio for setup and calibration

Provide:

1-Each, Extron, XTP 32 x 32, Series-2, Matrix switcher, Custom (Extron Master Quote CA#6564984) with input and output cards. – Or Equal

j. XTPTX1-1 to XTPTX1-5

Transmits HDMI or analog video, audio, and bidirectional RS-232 and IR up to 330 feet (100 m) over a shielded CATx

HDMI and VGA and Audio inputs

Supports computer and video resolutions up to 1920x1200, including 1080p/60 Deep Color and 2K — Supports digital signal transmission up to 330 feet over a single twisted pair cable.

Extron XTP DTP 24 shielded twisted pair cable is strongly recommended for optimal performance

Auto-switching between inputs.

Digital conversion of analog input signals.

Supported HDMI specification features include data rates up to 6.75 Gbps, Deep Color up to 12-bit, 3D, and HD lossless audio formats

HDCP compliant

User-selectable HDCP authorization

EDID Minder

Key Minder

HDCP Visual Confirmation

Front panel USB configuration port

Mounts in an included two-gang Decora-style wall plate

Provide:

5-Each, Extron XTP T UWP 202, 60-1216-13, Two Input XTP Transmitter, Decora, Wall plate, White. – Or Equal

k. XTPTX2-1 & XTPTX2-2

Transmits HDMI and bidirectional RS-232 and IR up to 330 feet (100 m) over a shielded CATx

HDMI input

Supports computer and video resolutions up to 1920x1200, including 1080p/60 Deep Color and 2K — Supports digital signal transmission up to 330 feet over a single twisted pair cable.

Extron XTP DTP 24 shielded twisted pair cable is strongly recommended for optimal performance

Supported HDMI specification features include data rates up to 6.75 Gbps, Deep Color up to 12-bit, 3D, and HD lossless audio formats

HDCP compliant

User-selectable HDCP authorization

EDID Minder

Key Minder

HDCP Visual Confirmation

Front panel USB configuration port

Mounts in an included one-gang Decora-style wall plate

Provide:

2-Each, Extron XTP T HWP 101, 60-1407-13, HDMI Decora Transmitter – White – Or Equal

l. XTPTX3-1

Transmits HDMI or analog video, audio, and bidirectional RS-232 and IR up to 330 feet (100 m) over a shielded CATx

HDMI and VGA and Audio inputs

Supports computer and video resolutions up to 1920x1200, including 1080p/60 Deep Color and 2K — Supports digital signal transmission up to 330 feet over a single twisted pair cable.

Extron XTP DTP 24 shielded twisted pair cable is strongly recommended for optimal performance

Auto-switching between inputs.

Digital conversion of analog input signals.

Supported HDMI specification features include data rates up to 6.75 Gbps, Deep Color up to 12-bit, 3D, and HD lossless audio formats

HDCP compliant

User-selectable HDCP authorization

EDID Minder

Key Minder

HDCP Visual Confirmation

Provide:

1-Each, Extron XTP T USW 103, 60-1198-01, Three Input XTP Switcher with Integrated XTP Transmitter. – Or Equal

m. XTPTX4-1 & XTPTX4-2

Transmits HDMI and bidirectional RS-232 and IR up to 330 feet (100 m) over a shielded CATx

Supports computer and video resolutions up to 1920x1200, including 1080p/60 Deep Color and 2K — Supports digital signal transmission up to 330 feet over a single twisted pair cable.

Extron XTP DTP 24 shielded twisted pair cable is strongly recommended for optimal performance

Auto-switching between inputs.

Digital conversion of analog input signals.

Supported HDMI specification features include data rates up to 6.75 Gbps, Deep Color up to 12-bit, 3D, and HD lossless audio formats

HDCP compliant

User-selectable HDCP authorization

EDID Minder

Key Minder

HDCP Visual Confirmation

Provide:

2-Each, Extron XTP T HDMI, 60-1043-12, HDMI XTP Transmitter. – Or Equal

n. XTPRX1-1 to XTPRX1-8

Receives video with embedded audio, bidirectional RS-232 and IR, and Ethernet up to 330 feet (100 m) over a shielded CATx cable — The XTP SR HDMI provides high reliability and maximum performance on an economical and easily installed cable infrastructure.

Scales HDMI, DVI, RGB, HD component video, and standard definition video received from XTP devices

Selectable output rates from 640x480 to 1920x1200, including 1080p/60 and 2K — The output rate can be selected using the on-screen menu system or via RS‑232 control.

Supported HDMI specification features include data rates up to 6.75 Gbps, Deep Color up to 12-bit, 3D, and HD lossless audio formats

HDCP compliant

User-selectable HDCP authorization

EDID Minder

Key Minder

Provide:

8-Each, Extron XTP SR HDMI, 60-1199-01, XTP Scaling Receiver. – Or Equal

o. SMP1-1

Process two high resolution AV signals from up to five available inputs

Stream and record simultaneously

High quality scaling with flexible two-window management

Produces MP4 media files that are compatible with virtually any media player

Available with 400 Gigabytes of internal solid state storage to allow more time between content transfers

Save recordings to internal solid state drive, external USB storage, or a defined network storage directory

Stream concurrently at two resolutions and bit rates

Stream at resolutions from 512x288 to 1080p/30

Internal Solid State Storage

HDCP-compliant input and output signal management

HDMI-embedded stereo audio or analog stereo input and output signal support

Audio mixing and DSP functionality

RS‑232, Ethernet, and digital I/O control ports

Supports source resolutions up to 1920x1200, including HDTV 1080p/60

Standards-based H.264 / MPEG‑4 AVC video compression

Provide:

1-Each, Extron SMP 351, 60-1324-01, H.264 Streaming Media Processor, Standard Version – 80 GB SSD. – Or Equal

p. HDMIDA1-1 to HDMIDA1-3

EDID Minder® automatically manages EDID communication between connected devices

Key Minder® continuously verifies HDCP compliance

HDCP compliant

Supports computer video up to 1920x1200, including HDTV 1080p/60 and 2K

Supported HDMI specification features include data rates up to 6.75 Gbps, Deep Color up to 12-bit, 3D, Lip Sync, and HD lossless audio formats

Automatic input cable equalization to 50 feet at 1080p/60 with 8-bit color

Automatic color bit depth management

HDMI to DVI Interface Format Correction

Output muting via RS-232

EDID status, HDCP authentication, and signal presence LED indicators

Provide:

3-Each, Extron HDMI DA6, 60-999-01, Six Output HDMI Distribution Amplifier. – Or Equal

q. BD1-1

Digital media player (Blu-ray Disc, DVD, CD, USB device [mass storage class]) AVCHD playback format

Supported Disc Formats: Blu-ray Disc: BD25, BD50, BD-ROM, BD-R, BD-RE

DVD: DVD, DVD+R, DVD-R, DVD+RW, DVD-RW

CD: CD, CD-R, CD-RW, DTS Music Disc (DTS Audio CD, 5.1 Music Disc), HDCD, Super Video CD (SVCD), Video CD (VCD)

Video Resolutions: Auto, 480i/576i, 480p/576p, 720p, 1080i, 1080p

Aspect Ratios: 16:9 Full, 16:9 Normal, 4:3 Pan & Scan, 4:3 Letterbox

System NTSC, PAL, Multi (if supported by TV)

HDMI Color Space: RGB PC Level, RGB Video Level, YCbCr (4:4:4), YCbCr 4:2:2

Output: HDMI > v1.4 (3D), HDCP 1.4

Decoding: Video: DivX 3, 4, 5, 6; DivX HD; MPEG-1; MPEG-2; MPEG-4; MPEG-4 AVC (H.264); VC-1 (Windows Media Video); Xvid

Audio: AAC; Dolby Digital; Dolby Digital Plus; Dolby TrueHD; DTS Digital Surround; DTS-HD; WMA

Serial Remote Connector: 9-pin D-Sub female, RS-232C, Mode: Full duplex, Baud Rate: 9600 or 38400 bps (selectable)

Ethernet Connector: LAN port, Standards: Ethernet (10 Mbps), Fast Ethernet (100 Mbps)

Provide:

1-Each, Denon DN-500BD Pro Blu-Ray DVD player. – Or Equal

r. CATVRX1-1 to CATVRX1-3

RF Input: Air/Cable, ‘F’, female, 75 ohm impedance, supports dual Cable and Air tuning with optional RF-AB RF A-B Switch, New digital RF tuning for improved sensitivity

HD Outputs: HDMI and switchable RGB/Component outputs operate simultaneously

HDMI: HDMI receptacle (720p@59.94 Hz, 1080p/1080i/480p@ 29.97 Hz), version 1.3, PCM/AC3 digital audio, HDCP

Audio Outputs: All operate simultaneously, including HDMI audio

Digital Audio: S/PDIF: Coax and TOSlink optical output, Dolby 5.1, PCM, or PCM variable

Stereo Audio: 2 stereo RCA female jacks, variable level

Control Options: RJ-45: 10/100 Ethernet connector, Telnet control and onboard Web page. Supports 2 Telnet sessions, RS-232: DB-9 male, RS-232 data link to control system (protocol is the same for RS-232 or Telnet), 300 to 19,200 baud (9600 default), 8 data bits, no parity, 1 stop bit

Provide:

1-Each, Contemporary Research 232-ATSC 4, Off Air HDTV Tuner, with RS232 Control. – Or Equal

1-Each, Contemporary Research RK1, Single Rack Kit, 1RU.

s. SCLBRDG1-1

Video input and loop through

Number/signal type: 1 HDMI/DVI (HDCP compliant), 1 HDMI/DVI loop-through (HDCP compliant)

Connectors: 1 female HDMI, 1 female HDMI loop-through

Horizontal frequency: 15 kHz to 100 kHz

Vertical frequency: 24 Hz to 75 Hz

Resolution range: 640x480 through 1600x1200, 1920x1200 (with reduced blanking), 480i, 576i, 480p, 720p, 1080i, and 1080p

Digital pixel data bit depth: 8, 10, and 12 bits per channel; 165 MHz pixel clock

Standards: DVI 1.0, HDMI 1.4, HDCP 1.3

Video processing: Colors: 11 million (8-bit 4:2:2 processing)

Video output: Number/signal type 1 USB digital video

Connectors: 1 female USB type B

USB scaled resolutions: 320x1801,2, 320x2401,2, 424x2401,2, 640x3601,2, 640x4801,2, 848x4801,2, 960x5401,2, 720p1,2, 1080p1, 1 = at 15 Hz, 2 = at 30 Hz

USB encoding: Number/signal type 1 USB (scaled, non-HDCP compliant)

Vertical frequency: 15 Hz, 30 Hz

Video encoding: MJPEG

Resolution: 320x180 through 1080p

Audio: PCM, 24-bit, 48 kHz,

Bit rate: Up to 60 Mbps

USB standards: USB 2.0, high speed

Provide:

1-Each, Extron MediaPort 200, 60-1488-01, HDMI and Audio to USB Scaling Bridge. – Or Equal

1-Each, Extron RSB 129 60-604-02, Basic Rack Shelf for 9.5" Deep Products. – Or Equal

t. CAM1-1 to CAM1-4

Image Sensor: 1/2.8”, 2.38 Megapixel, Full HD (1080p/60 native) High-speed, Low Noise CMOS Image Sensor

Lens: 30X Optical Zoom

Horizontal FOV 65° Wide end to 2.3° Tele end, f=4.3mm to 129mm, F1.6 to F4.7

Supported Resolutions HD Resolutions: 1080p/60/59.94/50/30/25, 1080i/60/59.94/50, 720p/60/59.94/50/30/25, 16:9 Format

Tri-Synchronous Motion: Concurrent PTZ motor movement and simultaneous PTZ arrival at a stored preset.

Advanced ISP: Vivid and accurate color with extremely fast, razor sharp automatic focus and iris routines.

S/N Ratio > 50 dB

Minimum Illumination 1.4 lux (F1.6, 50IRE), Recommended illumination >100 lux and above (Normal office lighting is 375-500 lux)

Minimum Distance 10mm (wide end) to 1.2m (tele end)

Pan & Tilt Angle/Speed Pan/Tilt Angles: ±160°, Tilt: +90° to -30°

Pan/Tilt Speeds: Both Axes 0.35°/sec to 120°/sec

Sync System Internal

Control Methods Ethernet for Internal Web Pages and Telnet, IR Remote Commander and RS-232 for external controllers

Dimensions/Weight 6.942” (176.3mm) H x 7.056” (179.2 mm) W x 6.757” (171.6mm) D

4.85 lbs. (2.199923 kg)

Provide:

4-Each, Vaddio RoboSHOT 30 QCCU, 999-9917-000W, HD quality PTZ camera, CCU quick connect and wall shelf. – Or Equal

2-Each, Vaddio Ceiling mount, 535-2000-206, suspended Ceiling Mount for Vaddio Cameras. – Or Equal

u. CAMCNTL1-1

Compatible Cameras: Vaddio, Panasonic, Sony & Canon (See Manual for Specific Models)

Video Formats Supported: NTSC and PAL

Video Switcher: 6 x 2 (or Two 6x1 in Dual Mode)

Video Transitions: Cross Fade, 9 Wipe options and Straight Cuts, Fade to Black

Video Inputs: Five (5) DE-15-F: RGBHV, HD Component (YPbPr), or Y/C & Composite using adapter cables, One (1) DVI-I (both DVI-D and DVI-A): HDMI 1.3 Receiver, Compliant with DVI, 1.0 and HDMI 1.3

Preview or Multiviewer Output: One (1) DE-15-F Preview or Multiviewer Output: RGBHV, HD Component, (YPbPr), or Y/C & Composite using adapter cables, One (1) DVI-D Preview or Multiviewer Output: HDMI 1.3 Transmitters, Compliant with DVI 1.0 and HDMI 1.3

Note: Same resolution on both Preview outputs

Program Output: One (1) DE-15-F Program Output: RGBHV, HD Component (YPbPr), or Y/C &

Composite using adapter cables, One (1) DVI-D) Program Output: HDMI 1.3 Transmitters, Compliant with DVI 1.0, and HDMI 1.3

Note: Same resolution on both Program outputs

Camera Control Ports: Six (6) RS-232 on RJ-45F

Control Interface: One (1) RS-232 on DB-9

LCD Display: 8-line backlit LCD display

Power Requirements: PowerRite 18 VDC, 2.78 Amp

Control Inputs for Auto Mode (input 1 & 2): Cameras 1 & 2 have 6 presets each or Camera 1 can have 12

Tally Output: Tally outputs for each of the six video inputs

Weight: 9.5 lbs. (4.32kg) – approximate weight

Dimensions (H x W x D): 4” (10.16cm) x 16” (40.64cm) x 10” (25.4cm)

Provide:

1-Each, Vaddio Production VIEW HD MV, 999-5625-000, Camera controller and production switcher. – Or Equal

v. PC1-1

1-Each, PC Computer with SKYPE Software, keyboard and mouse. (OFE)

w. PC1-2

1-Each, PC Computer for use with Shure DIS System software. (Computer, keyboard and mouse OFE) Shure DIS software to be provided by Contractor.

x. WRLSKYBRD/MS1-1 & 1-2

Provide:

2-Each, Wireless Computing RF-412, Combo package with RF keyboard and optical mouse with 50’ minimum range, (RF-240 & RF-172). – Or Equal

z. WCLB1-1

Wireless collaboration gateway with WAP

Integrated dual band wireless access point at 2.4 GHz or 5 GHz

Provides full screen mirroring for Apple iOS devices1

Simultaneous content display from up to four different personal devices

Dedicated mobile app, MirrorOp® for Extron ShareLink™, for reliable iOS and Android content sharing

Collaboration mode allows any attendee to display content and control the presentation

Full-motion video playback from laptops, enables display of media files from a Windows or OS X computer at up to 30 fps for a smooth viewing experience

Security codes ensure content is delivered only to the selected display devices

Displays content directly from a USB flash drive

Full screen or four-window display

Power over Ethernet, or PoE, eliminates the need for a local power supply

Gigabit Ethernet

Three USB ports for peripheral support

HDMI and VGA video outputs

Plenum rated - meets UL 2043 for heat and smoke release, excluding power supply

Front-mounted antennas for easy rack installation

1-Each, Extron ShareLink 250, 60-1508-01 or equal

6. Audio Equipment

a. DSP3-1

12 mic/line level inputs with AEC, 8 mic/line level outputs

Up to 8 channels of configurable USB audio

RS-232 serial port

4-pin GPIO

Standard telephone interface via a RJ-11 connector

Provide:

1-Each, Biamp Tesira Forte AVB TI, POTs line input. – Or Equal

b. DSP4-1

12 mic/line level inputs with AEC, 8 mic/line level outputs

Up to 8 channels of configurable USB audio

RS-232 serial port

4-pin GPIO

SIP VoIP interface via a RJ-45 connector

Provide:

1-Each, Biamp Tesira Forte AVB VI, VoIP input. – Or Equal

c. DSP5-1

Supports up to 3 DSP-2 cards

Up to 12 I/O cards with a maximum of 48 channels of analog audio

Up to 420 x 420 channels of digital I/O over AVB

Supports optional 32 x 32 CobraNet audio networking

Supports optional 64 x 64 Dante audio networking

System configuration and control via Ethernet or serial connection

Front panel OLED display for device and system information

SpeechSense and AmbientSense processing algorithms

Signal processing via intuitive software allows configuration and control for: signal routing and mixing, equalization, filtering, dynamics, delay and much more

Wide selection of I/O cards available

4-channel Acoustic Echo Cancellation card (also includes AGC and ANC) and Ambient Noise Compensation card available

Rack mountable (3RU)

CE marked, UL listed and RoHS compliant

Provide:

1-Each, Biamp Tesira Server-IO AVB. – Or Equal

1-Each, Biamp Tesira AVB-1 network card. – Or Equal

1-Each, Biamp Tesira DSP-2 card. – Or Equal

9-Each, Biamp Tesira SEC-4, Audio Input Card (4 channels). – Or Equal

d. AREC1-1 & AREC1-2

Records to SD/SDHC and USB media in MP3 and WAV (up to 24-bit/96kHz)

Dual Record feature (records to two media options simultaneously for primary and backup recording)

Relay Record feature (continues recording to backup media when primary media is full)

File Archiving via FTP (Automatic or Timed) with 24/7 record feature

Web Remote for setup and control with Password Protection

Independent switchable XLR Mic/Line inputs with +48V Phantom Power

Timer recording/playback (30 schedules available)

IP, RS-232c, GPIO, USB keyboard remote control

Front panel USB keyboard connection

NTP supported (Network Time Protocol)

EDL marking & file edit functions (Move, Copy, Combine and Divide)

Record monitor (listen the recorded signal while recording)

Large, bright OLED display

DMP Mark Editor software included (Windows only)

Provide:

2-Each, Denon DN-700R, Pro Digital Audio Recorder. – Or Equal

e. AMP1-1 to AMP1-2

2-Each, QSC Audio CX302V, OCFA Furnished Amplifiers.

f. SPRK1-1

1-Each, Renkus Heinz Speaker, OCFA furnished.

g. SPKR2-1 to SPKR2-x

x-Each, Ceiling Speakers, OCFA Furnished.

h. WMRX1-1

RF Carrier Frequency Range 470–937.5 MHz, varies by region

Image Rejection >70 dB, typical

Latency <2.9 ms

RF Sensitivity -97 dBm at 10-5 BER

Working Range 100 m (328 ft.) line-of-sight Note: Actual range depends on

RF signal absorption, reflection and interference.

Audio Frequency Range 20 Hz to 20 kHz Note: Dependent on microphone type.

Audio Dynamic Range >120 dB, A-weighted, typical

(System Gain @ +10)

Total Harmonic Distortion <0.1%, (−12 dBFS input, System Gain @ +10)

Provide:

1-Each, Shure QLXD24/B58, Digital Wireless Microphone System with Hand Held Mic Transmitter. – Or Equal

i. WMRX1-2

RF Carrier Frequency Range 470–937.5 MHz, varies by region

Image Rejection >70 dB, typical

Latency <2.9 ms

RF Sensitivity -97 dBm at 10-5 BER

Working Range 100 m (328 ft.) line-of-sight Note: Actual range depends on

RF signal absorption, reflection and interference.

Audio Frequency Range 20 Hz to 20 kHz Note: Dependent on microphone type.

Audio Dynamic Range >120 dB, A-weighted, typical (System Gain @ +10)

Total Harmonic Distortion <0.1%, (−12 dBFS input, System Gain @ +10)

Provide:

1-Each, Shure QLXD14/83, Digital Wireless Microphone System with Belt pack transmitter and lapel microphone. – Or Equal

j. ANTDA1-1

Antenna Splitter/Combiner.

Wideband UHF (470-952 MHz)

Four-way active antenna splitter

Front-mounting antenna hardware

Rack-mounting hardware

External power supply

Antenna cables for receiver connections

DC power cables for receiver connections

Provide:

1-Each, Shure UA844SWB Antenna Splitter/Combiner.

k. ANTDA1-1 & ANTDA1-2

Provide:

1-Set, Shure US221RF, Passive Antenna Splitter. – Or Equal

2-Each, 1-Gang plates with BNC Bulkhead connectors. – Or Equal

l. Plates

Provide:

2-Each, RCI PC-G1320-E-S-W, Audio output plate with single XLR-F, white with black engraving, 1-Gang (custom engraved label "Press Feed") – Or Equal

m. AVBNETSWT1-1

AVB Network Switch

AVB ports: 5

Ethernet ports: 1, (Note: the five AVB ports can also be used for Ethernet)

Operational bandwidth: 10 / 100 / 1 Gigabit

Front panel: 12 x activity LED

Power: 8-18V DC • 0.5A • tip positive

Dimensions: Length: 5 ½ in / 14 cm, Width: 3 ⅝ in / 9.2 cm, Height: 1 ⅛ in / 2.7 cm

Provide:

1-Each, MOTU 9305, 5 Port AVB Ethernet Switch – Or Equal

n. MIC2-1

1-Each, 15” Goose Neck Cardioid Microphone with shock mount base (podium), Shure MX415C or equal

o. MIC3-1

1-Each, Voice Communication Microphone (AV Booth), Shure 522 or equal

p. SPKR1-1

Speaker Section

Units 110 x 40 mm antimagnetic cone speakers

Frequency Response: 200 Hz – 20 kHz

Amplifier Section

Rated Output Power 10W x 2

Digital Input: XLR-3-31 connector (AES/EBU)

Sampling Frequency: 44.1 kHz to 96 kHz

Analog Inputs: XLR-3-31 connector (balanced)

Rated input level: +4/0dBu

Input Impedance: 10k ohm or more

1/4” Phone jack (unbalanced)

Rated input level: -10/-14 dBV

Input Impedance: 10k ohm or more

Digital THRU XLR-3-31 connector (AES/EBU)

Analog THRU XLR-3-31 / 1/4” TS phone

Phones: 1/4” stereo phones

Adapted load impedance: 16 ohm or more

Maximum output: 20mW + 20mW (32ohm, 1kHz)

Level Meter 26-dot LED x 2

Reference Level: Digital -20dBFS

Analog XLR +4/9dBu; TS phone -10/-14dBV

Distortion (T.H.D.) 0.1% or less

Dimensions: 482 (H) x 44 (W) x 284 (D) mm (including protruding parts)

Weight: approx. 3.5 kgs

Power Requirement: AC 100V to 240V 50/60Hz

Power Consumption: 10 W (0.5W or less in standby mode) - See more at:

1-Each, Fostex RM-3 or equal

7. Microphone, Speaker and Voting System - Discussion System & Software

a. DCS1-1 & DCS1-2

Conference unit for chairmen and delegates

Fully digital audio transmission

Open cable topology with loop through connections in daisy chains

DCS-LAN connection by use of CAT 5e (or higher) F/UTP or U/FTP cabling

Maximum 3800 conference units per system

Support for 4 microphone operation modes; Automatic, FIFO, Manual and VOX (voice activation)

Support for 3 microphone interrupt ability modes enabling 'ping pong' mode

Auto off of conference units

Lockable XLR gooseneck microphone connector

High-quality loudspeaker

2 channel selectors supporting the floor channel and 31 interpretation channels

2 headphone sockets

Microphone and function (all delegates off/mute) buttons

Exchangeable buttons for changing the button labels to other languages and other functionality.

Provide:

3-Each, Shure DC 6190 P, Portable Conference Unit, Base Unit (1 spare). – Or Equal

b. DCS2-1 to DCS2-40

Provide:

43-Each, Shure DM 6190 P, Portable Conference Unit, (2 spares). – Or Equal

c. DCSCCU1-1

System central control for the DCS 6000 Digital Discussion system

Powers up to 60 units without an extra power supply

Supports a system of up to 500 conference units and 128 interpretation stations

Supports up to 16 interpretation channels and a floor mix of up to eight open microphones

Expanded functionality with SW 6000 Conference Management software

Multi-language web browser for system configuration, microphone control and basic operational parameters

RJ-45 ports provide power, audio, and control transport across a chain of chairman, delegate, and interpretation units

Daisy-chain topology with loop-through connections or star topology

Digital audio transmission with proprietary codec algorithm prevents unauthorized listening of the audio signal

DCS-LAN connection using CAT 5e (or higher) shielded F/UTP or U/

FTP cabling

Supports Reply functionality to briefly comment or ask a question to the present speaker

Support for 4 microphone modes; Automatic, FIFO and Manual and

VOX (voice activation)

Four analog audio outputs for group or interpretation channels

TCP/IP Ethernet connection for browser control, SW 6000 and third party external control (AMX, Crestron etc.)

Built-in table for attaching seat numbers/names to units using a browser

Provide:

1-Each, Shure CU 6105, Central Control Unit, fully digital. – Or Equal

1-Each, Shure FL 6000 4A, Feature License. – Or Equal

1-Each, Shure SW 6000, Conference Management Software. – Or Equal

2-Each, Shure SW 6008, CUA – Conference User Application. – Or Equal

1-Each, Shure SW 6010, Microphone Control Module. – Or Equal

1-Each, Shure SW 6020, Delegate information table and user profiles software module. – Or Equal

1-Each, Shure SW 6110 50, Advanced Microphone Control. – Or Equal

d. DCSEXT1-1

Provide:

1-Each, Shure EX 6010, DCS LAN Extension Unit: Includes 4 Repeated outputs with 125-Watt power. – Or Equal

e. MIC1-1 to MIC1-42

Cardioid pattern

RF resistant due to the unique DIS RF Shield

Flexible gooseneck

Illuminated light ring on microphone capsule

XLR plug

Back-Electret condenser microphone capsule

High close talk SPL level

Low noise level

Provide:

42-Each, Shure GM6525, 63 cm long, Black w/XLR plug Goose Neck Microphones.

f. Shure DCS System Cables & Misc.

Provide:

36-Each, Shure EC 6001-02, Cable, 2 m, Black, STP Cat. 5e incl. connectors (RJ45) for DDS 5900 & DCS 6000. – Or Equal

5-Each, Shure EC 6001-30, Cable, 30 m, Black, STP Cat. 5e incl. connectors (RJ45) for DDS 5900 & DCS 6000. – Or Equal

10-Each, Shure DH 6001 H, Lightweight Headphones, 600 Ohms. – Or Equal

8. ALS System – Existing System

a. ALSTX1-1

1-Each, Sennheiser SZI1015-W, IR Assistive Listening System Radiator Panel. (OFE)

1-Each, Sennheiser SI 1015, Wideband Modulator. (OFE)

Provide:

1-Each, Sennheiser SZI1015-W, IR Assistive Listening System Radiator Panel. (NEW)

2-Each, Sennheiser EZT3011, Induction loops. (NEW)

2-Each, Sennheiser EKI830, IR receiver. (NEW)

9. Control System

a. CNTR1-1

Memory: SDRAM 512 MB, Flash 4.5 GB

Software and control options: Software Extron Global Configurator® Plus and Professional for Windows®

Ethernet control: Network interface controllers (NICs) 1, Connector 1 female RJ-45 connector, Data rate: 0/100/1000Base-T, half/full duplex with autodetect.

Protocols: DHCP, DNS, HTTP, HTTPS, ICMP, NTP, SFTP, SMTP, SNMP, SSH, TCP/IP, UDP/IP

Default settings: Link speed and duplex level = autodetected

Serial control: 2 bidirectional RS-232, RS-422, RS-485 (ports 7 and 8), 6 bidirectional RS-232 (ports 1 through 6), (2) 3.5 mm captive screw connectors, 5 pole, (6) 3.5 mm captive screw connectors, 3 pole

Baud rate and protocol: 300 to 115200 baud (9600 baud = default); 8 (default) or 7 data bits; 1 (default) or 2 stop bits; no parity (default), even, odd, mark, or space parity

Flex I/O control: 4 analog input or digital input/output (configurable), (1) 3.5 mm captive screw connector, 5 pole

Digital inputs: Input voltage range 0 to 24 VDC, clamped at +30 VDC, Input impedance 29k ohms, Programmable pullup 1k ohms to +5 VDC

Baud rate and protocol (RS-232) 300 to 115200 baud (9600 baud = default); 8 (default) or 7 data bits; 1 (default) or 2 stop bits; no parity (default), even, odd, mark, or space parity

Relay control: 8 normally open relays, Relay control connectors, (4) 3.5 mm captive screw connectors, 4 pole, Relay control contact rating 24 VDC, 1 A

eBUS control: eBUS control ports (1) 3.5 mm captive screw connector, 5 pole (uses 4 poles), eBUS pin configuration: +V = +12 VDC; +S = + signal; -S = - signal; G = ground

Provide:

1-Each, Extron, IPCP 550, 60-1418-01, IP Link Pro Controller. – Or Equal

1-Each, Extron RSU 129, 60-190-01, Universal Rack Shelf Kit. – Or Equal

b. TP1-1

Screen type: Active matrix TFT color display

Size: 10.1" (25.7 cm), measured diagonally

Resolution: 1024x600

Dot/pixel pitch: 118 dpi

Aspect ratio: Widescreen

Color depth: 256k colors

Transparency: 8 bit alpha channel

Brightness: 200 nits (cd/m2)

Contrast: 500:1

Backlight: LED

Viewing angle: ±70° horizontal, +50°/-60° vertical

Touch screen: Resistive

Memory: SDRAM 512 MB, Flash 512 MB

Ethernet control/communications port: 1 RJ-45 female connector, Ethernet data rate 10/100Base-T, half/full duplex with autodetect, Ethernet protocol DHCP, DNS, HTTP, HTTPS, ICMP, SFTP, SSH, TCP/IP, UDP/IP

Motion sensor: On/off

Light sensor: On/off

Provide:

2-Each, Extron TLP Pro 1022T, 60-1393-02, Table Top 10” Pro Touch Panel. – Or Equal

1-Each, Extron power supply for TLP PRO 1022T, (70-775-01). – Or Equal

1-Each, Extron POE XTP PI 140, 60-1361-01 Power injector for staff table 10” TP. – Or Equal

c. TP2-1

Screen type: Active matrix TFT color display

Size: 12.1" (30.7 cm), measured diagonally

Resolution: 1280x800

Dot/pixel pitch: 125 dpi

Aspect ratio: Widescreen

Color depth: 24-bit, 16.7 million colors

Transparency: 8 bit alpha channel

Brightness: 360 nits (cd/m2)

Contrast: 950:1

Backlight: LED

Viewing angle: ±88° horizontal, ±88° vertical

Touch screen: Capacitive

Memory: SDRAM 512 MB, Flash 512 MB

Provide:

1-Each, Extron TLP Pro 1220TG, 60-1341-02, 12" Tabletop TouchLink Pro Touch panel. – Or Equal

1-Each, Extron power supply for TLP PRO 1220TG. (70-769-01. – Or Equal

d. AVNET1-1

Provide:

1-Each, Cisco, Catalyst 2960X-24 PD-L, Network Switch with POE. – Or Equal

e. Microphone Mute Button

Provide:

1-Each, RDL D-ERC1 Decora module (white). – Or Equal

1-Each, Extron, SMP100 1-gang surface mount box (60-1292-02). – Or Equal

10. Voting System.

a. Provide

32-Each, handheld roll call voting modules

1-Each, Clerks Control module

1-Each, Power Supply

2-Each, Large Display Panels (24” wide, 48” high, able to display 16 names per panel)

Provide:

ElectroVote Roll Call Voting System or equal

11. Racks and Misc.

a. RACKs, Existing OCFA furnished

b. Power Strips/conditioners

Maximum Output Current: 20 amps

Line Cord: Captive 3/12 AWG, 10 ft. black cord with NEMA 20 plug

Pull-out Lights: Two multi-LED, dimmable lamps

BNC Socket w/Switch: Rear rack lamp, 12VAC 500MA max (lamp not included)

Operating Voltage: 90 to 139 VAC

Spike Protection Mode: Line to neutral, zero ground leakage

Spike Clamping Voltage: 188 VAC peak @ 3,000 Amps

Response Time: 1 nanosecond

Maximum Surge Current: 6,500 Amps

Noise Attenuation: 10 dB @ 10 kHz, 40 dB @ 100 kHz, 50 dB @ 500 kHz

Dimensions: 19” W x 10.5” D x 1.75” H

Weight: 12 lbs.

Power Consumption: 12 watts

Safety Listing: cTUVus

Provide:

2-Each, Furman, PL-8 PRO-C. – Or Equal

c. Acoustic Treatment

Provide:

6-Each, Primacoustic, 24” x 48” panel, 2” square edge, custom cut to fit ceiling disc, (F121-2448-09). – Or Equal

6-Each, Primacoustic, twist-in cloud anchor (package of 12) F10-1007-00. – Or Equal

d. WKYBDMS1-1 and WKYBDMS1-2

RF Wireless keyboard & optical mouse, 50' range minimum (for OFE PCs)

2-Each, Wireless Computing RF-412 or equal

B. Classroom/Break-out Room AE117

1. Digital Video Equipment

a. PROJ1-1

Filter: Long lasting eco filter (up to 15,000 hours)

Brightness: 4,001 to 6,000 lm

Diagonal Screen Size: 1.02–10.16 m (40–400 inches) (16:10 aspect ratio

Technology: LCD, highly durable optical engine with inorganic LCD panels and polarizers providing up to 10,000 hours of maintenance free service.

Resolution: WUXGA, 1920 x 1200

Lens: Standard or as needed

Provide:

1-Each, Panasonic PT-EZ570UL, 5000 ANSI Lumen, 1920 x 1200 (16:10), 3 LCD, Projector. – Or Equal

1-Each, Panasonic ET-LAE200, projector lamp, spare. – Or Equal

1-Each, Panasonic ET-REF200, projector filter, spare. – Or Equal

1-Each, Chief Mfg. RPMA302, RPA Elite Universal & Custom Ceiling Projector Mounts with Keyed Locking. – Or Equal

b. SCN1-1

1-Each, OCFA Furnished Da-Lite Manual Pull-Down Screen.

c. DTPSWT1-1

All‑in‑one 8x6 4K matrix switcher, scaler, audio DSP with AEC,

Two DTP inputs and six HDMI inputs

Two HDMI outputs and four independently scaled DTP outputs

4K matrix switching and scaling with selectable seamless transitions and logo keying

Integrated DTP inputs and outputs support transmission of video, control, and audio up to 330 feet (100 meters) over a shielded CATx cable

Vector™ 4K scaling engine

4K matrix switching and scaling with selectable seamless transitions and logo keying

Selectable scaled DTP output rates from 640x480 to 4K

Provide:

1-Each, Extron DTP CrossPoint 86 4K, 60-1382-01, Digital Switcher, Preamp Output, w/o Amplifier and Control Processor, 4K backbone. – Or Equal

d. DTPTX1-1

Transmits HDMI or analog video, control, and analog audio up to 230 feet (70 meters) over a shielded CATx cable

Inputs: One HDMI, one VGA on 15‑pin HD, two 3.5 mm stereo mini jacks for audio

One HDMI input and one VGA input — The DTP T UWP 232 D allows for switching between HDMI and analog video sources.

Auto‑switching between inputs

Supports computer and video resolutions up to 1920x1200, including 1080p/60 and 2K

Analog stereo audio embedding

Extron XTP DTP 24 shielded twisted pair cable is strongly recommended for optimal performance

Independent analog audio inputs

Supports multiple embedded audio formats

Bidirectional RS‑232 and unidirectional IR pass‑through for AV device control

Remote power capability

Digital conversion of analog input signals

HDCP compliant

Supported HDMI specification features include data rates up to 6.75 Gbps, 3D, and HD lossless audio formats

EDID Minder

Supports EDID and HDCP transmission

RS-232 control

Contact closure control port

Mounts in an included two-gang Decora®‑style wall plate

Provide:

1-Each, Extron DTP T UWP 232 D, 60-1366-13, DTP Transmitter, HDMI, VGA, WP Decora, White. – Or Equal

e. DTPRX1-1 and DTPRX1-2

Receives HDMI plus control and analog audio up to 230 feet (70 meters) over a shielded CATx cable — The DTP HDMI 4K 230 Rx provides high reliability and maximum performance on an economical and easily installed cable infrastructure.

Outputs: One HDMI, stereo audio on captive screw

Supports computer and video resolutions up to 4K

Extron XTP DTP 24 shielded twisted pair cable is strongly recommended for optimal performance

Supports multiple embedded audio formats

Supported HDMI specification features include data rates up to 10.2 Gbps, Deep Color up to 12-bit, 3D, HD lossless audio formats, and CEC pass-through

HDCP 2.2 compliant

Supports EDID and HDCP transmission.

Bidirectional RS-232 and IR for AV device control.

Remote power capability

Provide:

2-Each, Extron DTP HDMI 4K 230 Rx, 60-1271-13, DTP HDMI Receiver. – Or Equal

f. BD1-1

Digital media player (Blu-ray Disc, DVD, CD, USB device [mass storage class]) AVCHD playback format

Supported Disc Formats: Blu-ray Disc: BD25, BD50, BD-ROM, BD-R, BD-RE

DVD: DVD, DVD+R, DVD-R, DVD+RW, DVD-RW

CD: CD, CD-R, CD-RW, DTS Music Disc (DTS Audio CD, 5.1 Music Disc), HDCD, Super Video CD (SVCD), Video CD (VCD)

Video Resolutions: Auto, 480i/576i, 480p/576p, 720p, 1080i, 1080p

Aspect Ratios: 16:9 Full, 16:9 Normal, 4:3 Pan & Scan, 4:3 Letterbox

System NTSC, PAL, Multi (if supported by TV)

HDMI Color Space: RGB PC Level, RGB Video Level, YCbCr (4:4:4), YCbCr 4:2:2

Output: HDMI > v1.4 (3D), HDCP 1.4

Decoding: Video: DivX 3, 4, 5, 6; DivX HD; MPEG-1; MPEG-2; MPEG-4; MPEG-4 AVC (H.264); VC-1 (Windows Media Video); Xvid

Audio: AAC; Dolby Digital; Dolby Digital Plus; Dolby TrueHD; DTS Digital Surround; DTS-HD; WMA

Serial Remote Connector: 9-pin D-Sub female, RS-232C, Mode: Full duplex, Baud Rate: 9600 or 38400 bps (selectable)

Ethernet Connector: LAN port, Standards: Ethernet (10 Mbps), Fast Ethernet (100 Mbps)

Provide:

1-Each, Denon DN-500BD, Blu-Ray Disk Player. – Or Equal

g. SMP1-1

Process two high resolution AV signals from up to five available inputs

Stream and record simultaneously

High quality scaling with flexible two-window management

Produces MP4 media files that are compatible with virtually any media player

Available with 400 Gigabytes of internal solid state storage to allow more time between content transfers

Save recordings to internal solid state drive, external USB storage, or a defined network storage directory

Stream concurrently at two resolutions and bit rates

Stream at resolutions from 512x288 to 1080p/30

Internal Solid State Storage

HDCP-compliant input and output signal management

HDMI-embedded stereo audio or analog stereo input and output signal support

Audio mixing and DSP functionality

RS‑232, Ethernet, and digital I/O control ports

Supports source resolutions up to 1920x1200, including HDTV 1080p/60

Standards-based H.264 / MPEG‑4 AVC video compression

Provide:

1-Each, Extron SMP 351, 60-1324-01, H.264 Streaming Media Processor, Standard Version – 80 GB SSD. – Or Equal

h. CATVRX1-1

RF Input: Air/Cable, ‘F’, female, 75 ohm impedance, supports dual Cable and Air tuning with optional RF-AB RF A-B Switch, New digital RF tuning for improved sensitivity

HD Outputs: HDMI and switchable RGB/Component outputs operate simultaneously

HDMI: HDMI receptacle (720p@59.94 Hz, 1080p/1080i/480p@ 29.97 Hz), version 1.3, PCM/AC3 digital audio, HDCP

Audio Outputs: All operate simultaneously, including HDMI audio

Digital Audio: S/PDIF: Coax and TOSlink optical output, Dolby 5.1, PCM, or PCM variable

Stereo Audio: 2 stereo RCA female jacks, variable level

Control Options: RJ-45: 10/100 Ethernet connector, Telnet control and onboard Web page. Supports 2 Telnet sessions, RS-232: DB-9 male, RS-232 data link to control system (protocol is the same for RS-232 or Telnet), 300 to 19,200 baud (9600 default), 8 data bits, no parity, 1 stop bit

Provide:

1-Each, Contemporary Research 232-ATSC 4, Off Air HDTV tuner with RS232 control. – Or Equal

1-Each, Contemporary Research RK1, Single Rack Kit, 1RU. – Or Equal

i. CAM1-1

Image Sensor: 1/2.8”, 2.38 Megapixel, Full HD (1080p/60 native) High-speed, Low Noise CMOS Image Sensor

Lens: 30X Optical Zoom

Horizontal FOV 65° Wide end to 2.3° Tele end, f=4.3mm to 129mm, F1.6 to F4.7

Supported Resolutions HD Resolutions: 1080p/60/59.94/50/30/25, 1080i/60/59.94/50, 720p/60/59.94/50/30/25, 16:9 Format

Tri-Synchronous Motion: Concurrent PTZ motor movement and simultaneous PTZ arrival at a stored preset.

Advanced ISP: Vivid and accurate color with extremely fast, razor sharp automatic focus and iris routines.

S/N Ratio > 50 dB

Minimum Illumination 1.4 lux (F1.6, 50IRE), Recommended illumination >100 lux and above (Normal office lighting is 375-500 lux)

Minimum Distance 10mm (wide end) to 1.2m (tele end)

Pan & Tilt Angle/Speed Pan/Tilt Angles: ±160°, Tilt: +90° to -30°

Pan/Tilt Speeds: Both Axes 0.35°/sec to 120°/sec

Sync System Internal

Control Methods Ethernet for Internal Web Pages and Telnet, IR Remote Commander and RS-232 for external controllers

Dimensions/Weight 6.942” (176.3mm) H x 7.056” (179.2 mm) W x 6.757” (171.6mm) D

4.85 lbs. (2.199923 kg)

Provide:

1-Each, Vaddio RoboSHOT 30 QCCU, 999-9917-000W, HD quality PTZ camera, CCU quick connect and wall shelf. – Or Equal

j. CAM2-1

Image Device: 1/2.8”, 2.14 Megapixel, Full HD (1080p/60 native) High-speed, Low Noise CMOS Image Sensor

Supported Resolutions HD Resolutions: 1080p/60/59.94/50/30/25, 1080i/60/59.94/50, 720p/60/59.94/50/30/25, Format varies depending on video resolution, USB 2.0 and 3.0 video resolutions/frame rates, all USB resolutions uncompressed

Streaming, IP (H.264, RTSP + USB 3.0 (UVC)

Lens: 10X Optical Zoom, Super Wide 11X Optical Zoom

S/N Ratio > 50 dB

Minimum Illumination Recommended illumination >100 lux

Minimum Distance 10mm (wide end) to 1.0m (tele end)

Pan & Tilt Angle/Speed Pan/Tilt Angles: ±170°, Tilt: +90° to -30°

Pan/Tilt Speeds: Both Axes 90°/sec

Horizontal FOV 67° Wide end (74° degrees in super wide mode) to 7.6° Tele end, f=3.8mm to 41.8mm, F1.8 to F3.4

Control Methods Ethernet for Internal Web Pages and Telnet, IR Remote Commander and RS-232 for external controllers

Gain – Auto or Manual

Backlight Compensation – On or Off

White Balance – Auto, Manual, One-Push

Noise Reduction – On or Off

Aperture/Detail – 16 steps (via all remote management interfaces)

Dimensions/Weight 6.3” (163 mm) H x 6.1” (155 mm) W x 5.5” (145 mm) D

3 lbs. (1.36 kg)

Provide:

1-Each, Vaddio ClearSHOT 10 USB, 999-9990-000W, HD quality PTZ camera, CCU quick connect and wall shelf. – Or Equal

k. WCLB1-1

Wireless collaboration gateway with WAP

Integrated dual band wireless access point at 2.4 GHz or 5 GHz

Provides full screen mirroring for Apple iOS devices1

Simultaneous content display from up to four different personal devices

Dedicated mobile app, MirrorOp® for Extron ShareLink™, for reliable iOS and Android content sharing

Collaboration mode allows any attendee to display content and control the presentation

Full-motion video playback from laptops, enables display of media files from a Windows or OS X computer at up to 30 fps for a smooth viewing experience

Security codes ensure content is delivered only to the selected display devices

Displays content directly from a USB flash drive

Full screen or four-window display

Power over Ethernet, or PoE, eliminates the need for a local power supply

Gigabit Ethernet

Three USB ports for peripheral support

HDMI and VGA video outputs

Plenum rated - meets UL 2043 for heat and smoke release, excluding power supply

Front-mounted antennas for easy rack installation

1-Each, Extron ShareLink 250, 60-1508-01 or equal

l. HDMISW1-1

Switches HDMI video and embedded multi-channel digital audio

Inputs: 4 female HDMI type A connectors

Output: 1 female HDMI type-A connector

EDID Minder® automatically manages EDID communication between connected devices

Supports computer video up to 1920x1200, including HDTV 1080p/60 and 2K

Supported HDMI specification features include data rates up to 6.75 Gbps, Deep Color up to 12-bit, 3D, Lip Sync, and HD lossless audio formats

HDCP compliant

Automatic color bit depth management

HDMI to DVI Interface Format Correction

Automatic input cable equalization to 50 feet at 1080p/60 with 8-bit color

Provides +5 VDC, 250 mA power on the output for external peripheral devices

Front panel security lockout

Multiple control options including front panel, RS-232, IR, contact closure, and auto-input switching

1-Each, Extron SW HD 4K, 60-1484-01, - or Equal

2. Audio Equipment

a. DSP1-1

12 mic/line level inputs with AEC, 8 mic/line level outputs

Up to 8 channels of configurable USB audio

RS-232 serial port

4-pin GPIO

Provide:

1-Each, Biamp Tesira Forte AVB AI, Digital Signal Processor. – Or Equal

b. DSP2-1

Up to 3 I/O cards: EIC-4, EEC-4, EOC-4, and EIOC-4

Up to 12 channels of analog audio

AVB connection to Tesira system for audio networking, configuration and control

Plug-in barrier strip connections on cards

Front panel LEDs for device status indications

Internal universal power supply

Rack mountable (1RU)

CE marked, UL listed, RoHS compliant

Provide:

1-Each, Biamp Tesira EX-MOD, expansion module. – Or Equal

2-Each, Biamp EIC-4, 4 microphone/line level input card. – Or Equal

c. AVBNETSWT1-1

AVB Network Switch

AVB ports: 5

Ethernet ports: 1, (Note: the five AVB ports can also be used for Ethernet)

Operational bandwidth: 10 / 100 / 1 Gigabit

Front panel: 12 x activity LED

Power: 8-18V DC • 0.5A • tip positive

Dimensions: Length: 5 ½ in / 14 cm, Width: 3 ⅝ in / 9.2 cm, Height: 1 ⅛ in / 2.7 cm

Provide:

1-Each, MOTU 9305, 5 Port AVB Ethernet Switch – Or Equal

d. WMRX1-1

RF Carrier Frequency Range 470–937.5 MHz, varies by region

Image Rejection >70 dB, typical

Latency <2.9 ms

RF Sensitivity -97 dBm at 10-5 BER

Working Range 100 m (328 ft.) line-of-sight Note: Actual range depends on

RF signal absorption, reflection and interference.

Audio Frequency Range 20 Hz to 20 kHz Note: Dependent on microphone type.

Audio Dynamic Range >120 dB, A-weighted, typical

(System Gain @ +10)

Total Harmonic Distortion <0.1%, (−12 dBFS input, System Gain @ +10)

Provide:

1-Each, Shure QLXD24/B58, Digital Wireless Microphone System with Hand Held Mic Transmitter. – Or Equal

e. WMRX1-2

RF Carrier Frequency Range 470–937.5 MHz, varies by region

Image Rejection >70 dB, typical

Latency <2.9 ms

RF Sensitivity -97 dBm at 10-5 BER

Working Range 100 m (328 ft.) line-of-sight Note: Actual range depends on

RF signal absorption, reflection and interference.

Audio Frequency Range 20 Hz to 20 kHz Note: Dependent on microphone type.

Audio Dynamic Range >120 dB, A-weighted, typical

(System Gain @ +10)

Total Harmonic Distortion <0.1%, (−12 dBFS input, System Gain @ +10)

Provide:

1-Each, Shure QLXD14/83, Digital Wireless Microphone System with Belt pack transmitter and lapel microphone. – Or Equal

f. CMIC1-1 to CMIC1-4

Provide:

Microflex ceiling microphone, cardioid pick-up, pre-amp, mounting plate, white,

4-Each, Shure MX22WP/C or equal

g. AMP1-1

1-Each, QSC Audio, CX302V Power Amplifier. (OFE)

f. SPKR1-1 to SPKR1-x

x-Each, Tannoy Ceiling Speakers. (OFE)

3. ALS System

a. ALSTX1-1 – Existing System

1-Each, Sennheiser SZI1015-W, IR Assistive Listening System Radiator Panel. (OFE)

1-Each, Sennheiser SI 1015, Wideband Modulator. (OFE)

Provide:

2-Each, Sennheiser EZT3011, Induction loops. (NEW)

2-Each, Sennheiser EKI830, IR receiver. (NEW)

4. Control System

a. CNTR1-1

Memory: SDRAM 512 MB, Flash 4.5 GB

Ethernet control: Network interface controllers (NICs) 1, Connector 1 female RJ-45 connector, Data rate: 0/100/1000Base-T, half/full duplex with autodetect.

Protocols: DHCP, DNS, HTTP, HTTPS, ICMP, NTP, SFTP, SMTP, SNMP, SSH, TCP/IP, UDP/IP

Default settings: Link speed and duplex level = autodetected

Serial control: 2 bidirectional RS-232, RS-422, RS-485 (ports 7 and 8), 6 bidirectional RS-232 (ports 1 through 6), (2) 3.5 mm captive screw connectors, 5 pole, (6) 3.5 mm captive screw connectors, 3 pole

Baud rate and protocol: 300 to 115200 baud (9600 baud = default); 8 (default) or 7 data bits; 1 (default) or 2 stop bits; no parity (default), even, odd, mark, or space parity

Flex I/O control: 4 analog input or digital input/output (configurable), (1) 3.5 mm captive screw connector, 5 pole

Digital inputs: Input voltage range 0 to 24 VDC, clamped at +30 VDC, Input impedance 29k ohms, Programmable pullup 1k ohms to +5 VDC

Baud rate and protocol (RS-232) 300 to 115200 baud (9600 baud = default); 8 (default) or 7 data bits; 1 (default) or 2 stop bits; no parity (default), even, odd, mark, or space parity

Relay control: 8 normally open relays, Relay control connectors, (4) 3.5 mm captive screw connectors, 4 pole, Relay control contact rating 24 VDC, 1 A

eBUS control: eBUS control ports (1) 3.5 mm captive screw connector, 5 pole (uses 4 poles), eBUS pin configuration: +V = +12 VDC; +S = + signal; -S = - signal; G = ground

Provide:

1-Each, Extron, IPCP 550, 60-1418-01, IP Link Pro Controller. – Or Equal

1-Each, Extron RSU 126, 60-190-10, Universal Rack Shelf Kit. – Or Equal

b. TP2-1

Screen type: Active matrix TFT color display

Size: 12.1" (30.7 cm), measured diagonally

Resolution: 1280x800

Dot/pixel pitch: 125 dpi

Aspect ratio: Widescreen

Color depth: 24-bit, 16.7 million colors

Transparency: 8 bit alpha channel

Brightness: 360 nits (cd/m2)

Contrast: 950:1

Backlight: LED

Viewing angle: ±88° horizontal, ±88° vertical

Touch screen: Capacitive

Memory: SDRAM 512 MB, Flash 512 MB

1-Each, Extron TLP Pro 1220TG, 60-1341-02, 12" Tabletop TouchLink Pro Touch panel. – Or Equal

c. POE1-1

Provide:

1-Each, Extron, XTP PI 140, 60-1363-01 Power injector. – Or Equal

d. NETSWT2-1

Provide:

1-Each, Cisco SG300-20, SRW2016-K9-NA, 20-Port Gigabit Ethernet Switch. – Or Equal

5. Racks and Misc.

a. RACKs, Existing OCFA furnished

b. Power Strips/conditioner

Maximum Output Current: 20 amps

Line Cord: Captive 3/12 AWG, 10 ft. black cord with NEMA 20 plug

Pull-out Lights: Two multi-LED, dimmable lamps

BNC Socket w/Switch: Rear rack lamp, 12VAC 500MA max (lamp not included)

Operating Voltage: 90 to 139 VAC

Spike Protection Mode: Line to neutral, zero ground leakage

Spike Clamping Voltage: 188 VAC peak @ 3,000 Amps

Response Time: 1 nanosecond

Maximum Surge Current: 6,500 Amps

Noise Attenuation: 10 dB @ 10 kHz, 40 dB @ 100 kHz, 50 dB @ 500 kHz

Dimensions: 19” W x 10.5” D x 1.75” H

Weight: 12 lbs.

Power Consumption: 12 watts

Safety Listing: cTUVus

Provide:

1-Each, Furman, PL-8 PRO-C – Or Equal

C. Classrooms 153 & 154

1. Digital Video Equipment

a. PROJ1-1 & PROJ1-2

Filter: Long lasting eco filter (up to 15,000 hours)

Brightness: 4,001 to 6,000 lm

Diagonal Screen Size: 1.02–10.16 m (40–400 inches) (16:10 aspect ratio

Technology: LCD, highly durable optical engine with inorganic LCD panels and polarizers providing up to 10,000 hours of maintenance free service.

Resolution: WUXGA, 1920 x 1200

Lens: Standard or as needed

Provide:

2-Each, Panasonic PT-EZ570UL, 5000 ANSI Lumen, 1920 x 1200 (16:10), 3 LCD, Projector. – Or Equal

2-Each, Panasonic ET-LAE200, projector lamp, spare. – Or Equal

2-Each, Panasonic ET-REF200, projector filter, spare. – Or Equal

2-Each, Chief Mfg. RPMA302, RPA Elite Universal & Custom Ceiling Projector Mounts with Keyed Locking. – Or Equal

b. SCN1-1 & SCN1-2

2-Each, OCFA Furnished Da-Lite Manual Pull-Down Screen.

c. DTPSWT1-1 & DTPSWT1-2

All‑in‑one 8x6 4K matrix switcher, scaler, audio DSP with AEC,

Two DTP inputs and six HDMI inputs

Two HDMI outputs and four independently scaled DTP outputs

4K matrix switching and scaling with selectable seamless transitions and logo keying

Integrated DTP inputs and outputs support transmission of video, control, and audio up to 330 feet (100 meters) over a shielded CATx cable

Vector™ 4K scaling engine

4K matrix switching and scaling with selectable seamless transitions and logo keying

Selectable scaled DTP output rates from 640x480 to 4K

Provide:

2-Each, Extron DTP CrossPoint 86 4K, 60-1382-01, Digital Switcher, Preamp Output, w/o Amplifier and Control Processor, 4K backbone. – Or Equal

d. DTPTX1-1 to DTPTX1-4

Transmits HDMI or analog video, control, and analog audio up to 230 feet (70 meters) over a shielded CATx cable

Inputs: One HDMI, one VGA on 15‑pin HD, two 3.5 mm stereo mini jacks for audio

One HDMI input and one VGA input — The DTP T UWP 232 D allows for switching between HDMI and analog video sources.

Auto‑switching between inputs

Supports computer and video resolutions up to 1920x1200, including 1080p/60 and 2K

Analog stereo audio embedding

Extron XTP DTP 24 shielded twisted pair cable is strongly recommended for optimal performance

Independent analog audio inputs

Supports multiple embedded audio formats

Bidirectional RS‑232 and unidirectional IR pass‑through for AV device control

Remote power capability

Digital conversion of analog input signals

HDCP compliant

Supported HDMI specification features include data rates up to 6.75 Gbps, 3D, and HD lossless audio formats

EDID Minder

Supports EDID and HDCP transmission

RS-232 control

Contact closure control port

Mounts in an included two-gang Decora®‑style wall plate

Provide:

4-Each, Extron DTP T UWP 232 D, 60-1366-13, DTP Transmitter, HDMI, VGA, WP Decora, White. – Or Equal

e. DTPRX1-1 to DTPRX1-9

Receives HDMI plus control and analog audio up to 230 feet (70 meters) over a shielded CATx cable — The DTP HDMI 4K 230 Rx provides high reliability and maximum performance on an economical and easily installed cable infrastructure.

Outputs: One HDMI, stereo audio on captive screw

Supports computer and video resolutions up to 4K

Extron XTP DTP 24 shielded twisted pair cable is strongly recommended for optimal performance

Supports multiple embedded audio formats

Supported HDMI specification features include data rates up to 10.2 Gbps, Deep Color up to 12-bit, 3D, HD lossless audio formats, and CEC pass-through

HDCP 2.2 compliant

Supports EDID and HDCP transmission.

Bidirectional RS-232 and IR for AV device control.

Remote power capability

Provide:

9-Each, Extron DTP HDMI 4K 230 Rx, 60-1271-13, DTP HDMI Receiver. – Or Equal

f. DTPTX2-1 to DTPTX2-2

Transmits HDMI plus control up to 230 feet (70 meters) over a shielded CATx cable

Inputs: One HDMI, one 3.5 mm stereo mini jack for audio

Supports computer and video resolutions up to 1920x1200, including 1080p/60 and 2K

Extron XTP DTP 24 shielded twisted pair cable is strongly recommended for optimal performance

Bidirectional RS‑232 and unidirectional IR pass‑through for AV device control

Remote power capability

Digital conversion of analog input signals

HDCP compliant

Supported HDMI specification features include data rates up to 6.75 Gbps, 3D, and HD lossless audio formats

EDID Minder

Supports EDID and HDCP transmission

RS-232 control

Contact closure control port

Provide:

2-Each, Extron DTP HDMI 4K 230 Tx, 60-1271-12, DTP HDMI Transmitter. – Or Equal

g. BD1-1 & BD1-2

Digital media player (Blu-ray Disc, DVD, CD, USB device [mass storage class]) AVCHD playback format

Supported Disc Formats: Blu-ray Disc: BD25, BD50, BD-ROM, BD-R, BD-RE

DVD: DVD, DVD+R, DVD-R, DVD+RW, DVD-RW

CD: CD, CD-R, CD-RW, DTS Music Disc (DTS Audio CD, 5.1 Music Disc), HDCD, Super Video CD (SVCD), Video CD (VCD)

Video Resolutions: Auto, 480i/576i, 480p/576p, 720p, 1080i, 1080p

Aspect Ratios: 16:9 Full, 16:9 Normal, 4:3 Pan & Scan, 4:3 Letterbox

System NTSC, PAL, Multi (if supported by TV)

HDMI Color Space: RGB PC Level, RGB Video Level, YCbCr (4:4:4), YCbCr 4:2:2

Output: HDMI > v1.4 (3D), HDCP 1.4

Decoding: Video: DivX 3, 4, 5, 6; DivX HD; MPEG-1; MPEG-2; MPEG-4; MPEG-4 AVC (H.264); VC-1 (Windows Media Video); Xvid

Audio: AAC; Dolby Digital; Dolby Digital Plus; Dolby TrueHD; DTS Digital Surround; DTS-HD; WMA

Serial Remote Connector: 9-pin D-Sub female, RS-232C, Mode: Full duplex, Baud Rate: 9600 or 38400 bps (selectable)

Ethernet Connector: LAN port, Standards: Ethernet (10 Mbps), Fast Ethernet (100 Mbps)

Provide:

2-Each, Denon DN-500BD, Blu-Ray Disk Player. – Or Equal

h. SMP1-1 & SMP1-2

Process two high resolution AV signals from up to five available inputs

Stream and record simultaneously

High quality scaling with flexible two-window management

Produces MP4 media files that are compatible with virtually any media player

Available with 400 Gigabytes of internal solid state storage to allow more time between content transfers

Save recordings to internal solid state drive, external USB storage, or a defined network storage directory

Stream concurrently at two resolutions and bit rates

Stream at resolutions from 512x288 to 1080p/30

Internal Solid State Storage

HDCP-compliant input and output signal management

HDMI-embedded stereo audio or analog stereo input and output signal support

Audio mixing and DSP functionality

RS‑232, Ethernet, and digital I/O control ports

Supports source resolutions up to 1920x1200, including HDTV 1080p/60

Standards-based H.264 / MPEG‑4 AVC video compression

Provide:

2-Each, Extron SMP 351, 60-1324-01, H.264 Streaming Media Processor, Standard Version – 80 GB SSD. – Or Equal

i. DECDR1-1 & DECDR1-2

Supports live IP video stream decoding — Use with the SME 100 to provide a complete end-to-end streaming solution.

Supports streaming resolutions from 480x320 up to 1080p/60 — Supports a vast array of resolutions to meet varying network conditions, topologies, source and display requirements.

AV media file playback from network shares — Use as a playback device for on-demand playback of network-accessible media files.

Compatible with MP4 and MPEG-2 Transport Stream container formats — Playback common H.264 media player formats from accessible network drives.

Selectable audio output format: HDMI-embedded stereo audio or analog stereo audio — Flexible, cost effective use of display speakers or existing audio systems.

Integrated scaler offers selectable output resolutions from 640x480 to 1920x1200 — Wide range of output resolutions ensure that consistent, reliable image quality is presented on many different types of displays.

Decode at native resolution — The output rate and resolution can be configured to automatically follow the native format of the decoded video stream.

EDID defined scaling — The output rate and resolution can be configured for automatic selection based on EDID communication with the connected display.

Ethernet to RS-232 pass through control — Integration friendly Ethernet to RS-232 pass through for display control.

Fill/Follow/Fit Aspect Ratio Management — Decoded video can fill a display, maintain aspect ratio, or maintain uniformity, presenting imagery that meets customer expectations.

Provide:

2-Each, Extron SMD 101, 60-1305-01, H.264 Streaming Media Decoder. – Or Equal

j. CATVRX1-1 & CATVRX1-2

RF Input: Air/Cable, ‘F’, female, 75 ohm impedance, supports dual Cable and Air tuning with optional RF-AB RF A-B Switch, New digital RF tuning for improved sensitivity

HD Outputs: HDMI and switchable RGB/Component outputs operate simultaneously

HDMI: HDMI receptacle (720p@59.94 Hz, 1080p/1080i/480p@ 29.97 Hz), version 1.3, PCM/AC3 digital audio, HDCP

Audio Outputs: All operate simultaneously, including HDMI audio

Digital Audio: S/PDIF: Coax and TOSlink optical output, Dolby 5.1, PCM, or PCM variable

Stereo Audio: 2 stereo RCA female jacks, variable level

Control Options: RJ-45: 10/100 Ethernet connector, Telnet control and onboard Web page. Supports 2 Telnet sessions, RS-232: DB-9 male, RS-232 data link to control system (protocol is the same for RS-232 or Telnet), 300 to 19,200 baud (9600 default), 8 data bits, no parity, 1 stop bit

Provide:

2-Each, Contemporary Research 232-ATSC 4, Off Air HDTV tuner with RS232 control. – Or Equal

2-Each, Contemporary Research RK1, Single Rack Kit, 1RU. – Or Equal

k. CAM1-1 & CAM1-2

Image Sensor: 1/2.8”, 2.38 Megapixel, Full HD (1080p/60 native) High-speed, Low Noise CMOS Image Sensor

Lens: 30X Optical Zoom

Horizontal FOV 65° Wide end to 2.3° Tele end, f=4.3mm to 129mm, F1.6 to F4.7

Supported Resolutions HD Resolutions: 1080p/60/59.94/50/30/25, 1080i/60/59.94/50, 720p/60/59.94/50/30/25, 16:9 Format

Tri-Synchronous Motion: Concurrent PTZ motor movement and simultaneous PTZ arrival at a stored preset.

Advanced ISP: Vivid and accurate color with extremely fast, razor sharp automatic focus and iris routines.

S/N Ratio > 50 dB

Minimum Illumination 1.4 lux (F1.6, 50IRE), Recommended illumination >100 lux and above (Normal office lighting is 375-500 lux)

Minimum Distance 10mm (wide end) to 1.2m (tele end)

Pan & Tilt Angle/Speed Pan/Tilt Angles: ±160°, Tilt: +90° to -30°

Pan/Tilt Speeds: Both Axes 0.35°/sec to 120°/sec

Sync System Internal

Control Methods Ethernet for Internal Web Pages and Telnet, IR Remote Commander and RS-232 for external controllers

Dimensions/Weight 6.942” (176.3mm) H x 7.056” (179.2 mm) W x 6.757” (171.6mm) D

4.85 lbs. (2.199923 kg)

Provide:

2-Each, Vaddio RoboSHOT 30 QCCU, 999-9917-000W, HD quality PTZ camera, CCU quick connect and wall shelf. – Or Equal

l. CAM2-1 and CAM2-2

Image Device: 1/2.8”, 2.14 Megapixel, Full HD (1080p/60 native) High-speed, Low Noise CMOS Image Sensor

Supported Resolutions HD Resolutions: 1080p/60/59.94/50/30/25, 1080i/60/59.94/50, 720p/60/59.94/50/30/25, Format varies depending on video resolution, USB 2.0 and 3.0 video resolutions/frame rates, all USB resolutions uncompressed

Streaming, IP (H.264, RTSP + USB 3.0 (UVC)

Lens: 10X Optical Zoom, Super Wide 11X Optical Zoom

S/N Ratio > 50 dB

Minimum Illumination Recommended illumination >100 lux

Minimum Distance 10mm (wide end) to 1.0m (tele end)

Pan & Tilt Angle/Speed Pan/Tilt Angles: ±170°, Tilt: +90° to -30°

Pan/Tilt Speeds: Both Axes 90°/sec

Horizontal FOV 67° Wide end (74° degrees in super wide mode) to 7.6° Tele end, f=3.8mm to 41.8mm, F1.8 to F3.4

Control Methods Ethernet for Internal Web Pages and Telnet, IR Remote Commander and RS-232 for external controllers

Gain – Auto or Manual

Backlight Compensation – On or Off

White Balance – Auto, Manual, One-Push

Noise Reduction – On or Off

Aperture/Detail – 16 steps (via all remote management interfaces)

Dimensions/Weight 6.3” (163 mm) H x 6.1” (155 mm) W x 5.5” (145 mm) D

3 lbs. (1.36 kg)

Provide:

1-Each, Vaddio ClearSHOT 10 USB, 999-9990-000W, HD quality PTZ camera, CCU quick connect and wall shelf. – Or Equal

m. DISP4-1 & DISP4-2

2-Each OCFA furnished and installed LCD 55” displays.

n. WCLB1-1

Wireless collaboration gateway with WAP

Integrated dual band wireless access point at 2.4 GHz or 5 GHz

Provides full screen mirroring for Apple iOS devices1

Simultaneous content display from up to four different personal devices

Dedicated mobile app, MirrorOp® for Extron ShareLink™, for reliable iOS and Android content sharing

Collaboration mode allows any attendee to display content and control the presentation

Full-motion video playback from laptops, enables display of media files from a Windows or OS X computer at up to 30 fps for a smooth viewing experience

Security codes ensure content is delivered only to the selected display devices

Displays content directly from a USB flash drive

Full screen or four-window display

Power over Ethernet, or PoE, eliminates the need for a local power supply

Gigabit Ethernet

Three USB ports for peripheral support

HDMI and VGA video outputs

Plenum rated - meets UL 2043 for heat and smoke release, excluding power supply

Front-mounted antennas for easy rack installation

1-Each, Extron ShareLink 250, 60-1508-01 or equal

n. HDMISW1-1

Switches HDMI video and embedded multi-channel digital audio

Inputs: 4 female HDMI type A connectors

Output: 1 female HDMI type-A connector

EDID Minder® automatically manages EDID communication between connected devices

Supports computer video up to 1920x1200, including HDTV 1080p/60 and 2K

Supported HDMI specification features include data rates up to 6.75 Gbps, Deep Color up to 12-bit, 3D, Lip Sync, and HD lossless audio formats

HDCP compliant

Automatic color bit depth management

HDMI to DVI Interface Format Correction

Automatic input cable equalization to 50 feet at 1080p/60 with 8-bit color

Provides +5 VDC, 250 mA power on the output for external peripheral devices

Front panel security lockout

Multiple control options including front panel, RS-232, IR, contact closure, and auto-input switching

1-Each, Extron SW HD 4K, 60-1484-01, - or Equal

2. Audio Equipment

a. DSP1-1 & DSP1-2

12 mic/line level inputs with AEC, 8 mic/line level outputs

Up to 8 channels of configurable USB audio

RS-232 serial port

4-pin GPIO

Provide:

2-Each, Biamp Tesira Forte AVB AI, Digital Signal Processor. – Or Equal

b. DSP2-1 & DSPEXP1-2

Up to 3 I/O cards: EIC-4, EEC-4, EOC-4, and EIOC-4

Up to 12 channels of analog audio

AVB connection to Tesira system for audio networking, configuration and control

Plug-in barrier strip connections on cards

Front panel LEDs for device status indications

Internal universal power supply

Rack mountable (1RU)

CE marked, UL listed, RoHS compliant

Provide:

1-Each, Biamp Tesira EX-MOD, expansion module. – Or Equal

4-Each, Biamp EIC-4, 4 microphone/line level input card. – Or Equal

c. AVBNETSWT1-1

AVB Network Switch

AVB ports: 5

Ethernet ports: 1, (Note: the five AVB ports can also be used for Ethernet)

Operational bandwidth: 10 / 100 / 1 Gigabit

Front panel: 12 x activity LED

Power: 8-18V DC • 0.5A • tip positive

Dimensions: Length: 5 ½ in / 14 cm, Width: 3 ⅝ in / 9.2 cm, Height: 1 ⅛ in / 2.7 cm

Provide:

1-Each, MOTU 9305, 5 Port AVB Ethernet Switch – Or Equal

d. WMRX1-1 & WMRX1-2

RF Carrier Frequency Range 470–937.5 MHz, varies by region

Image Rejection >70 dB, typical

Latency <2.9 ms

RF Sensitivity -97 dBm at 10-5 BER

Working Range 100 m (328 ft.) line-of-sight Note: Actual range depends on

RF signal absorption, reflection and interference.

Audio Frequency Range 20 Hz to 20 kHz Note: Dependent on microphone type.

Audio Dynamic Range >120 dB, A-weighted, typical (System Gain @ +10)

Total Harmonic Distortion <0.1%, (−12 dBFS input, System Gain @ +10)

Provide:

2-Each, Shure QLXD24/B58, Digital Wireless Microphone System with Hand Held Mic Transmitter. – Or Equal

e. WMRX2-1 & WMRX2-2

RF Carrier Frequency Range 470–937.5 MHz, varies by region

Image Rejection >70 dB, typical

Latency <2.9 ms

RF Sensitivity -97 dBm at 10-5 BER

Working Range 100 m (328 ft.) line-of-sight Note: Actual range depends on

RF signal absorption, reflection and interference.

Audio Frequency Range 20 Hz to 20 kHz Note: Dependent on microphone type.

Audio Dynamic Range >120 dB, A-weighted, typical (System Gain @ +10)

Total Harmonic Distortion <0.1%, (−12 dBFS input, System Gain @ +10)

Provide:

2-Each, Shure QLXD14/83, Digital Wireless Microphone System with Belt pack transmitter and lapel microphone. – Or Equal

f. CMIC1-1 to CMIC1-8

Provide:

Microflex ceiling microphone, cardioid pick-up, pre-amp, mounting plate, white,

8-Each, Shure MX22WP/C or equal

g. AMP1-1 & AMP1-2

2-Each, QSC Audio, CX302V Power Amplifier. (OFE)

h. SPKR1-1 to SPKR1-x

x-Each, Tannoy Ceiling Speakers. (OFE)

i. AVB Network Switch

AVB ports: 5

Ethernet ports: 1, (Note: the five AVB ports can also be used for Ethernet)

Operational bandwidth: 10 / 100 / 1 Gigabit

Front panel: 12 x activity LED

Power: 8-18V DC • 0.5A • tip positive

Dimensions: Length: 5 ½ in / 14 cm, Width: 3 ⅝ in / 9.2 cm, Height: 1 ⅛ in / 2.7 cm

Provide:

1-Each, MOTU 9305, 5 Port AVB Ethernet Switch – Or Equal

3. ALS System – Existing System

a. ALSTX1-1 & ALSTX1-2

2-Each, Sennheiser SZI1015-W, IR Assistive Listening System Radiator Panel. (OFE)

2-Each, Sennheiser SI 1015, Wideband Modulator. (OFE)

Provide:

2-Each, Sennheiser EZT3011, Induction loops. (NEW)

2-Each, Sennheiser EKI830, IR receiver. (NEW)

4. Control System

a. CNTR1-1 & CNTL1-2

Memory: SDRAM 512 MB, Flash 4.5 GB

Software and control options: Software Extron Global Configurator® Plus and Professional for Windows®

Ethernet control: Network interface controllers (NICs) 1, Connector 1 female RJ-45 connector, Data rate: 0/100/1000Base-T, half/full duplex with autodetect.

Protocols: DHCP, DNS, HTTP, HTTPS, ICMP, NTP, SFTP, SMTP, SNMP, SSH, TCP/IP, UDP/IP

Default settings: Link speed and duplex level = autodetected

Serial control: 2 bidirectional RS-232, RS-422, RS-485 (ports 7 and 8), 6 bidirectional RS-232 (ports 1 through 6), (2) 3.5 mm captive screw connectors, 5 pole, (6) 3.5 mm captive screw connectors, 3 pole

Baud rate and protocol: 300 to 115200 baud (9600 baud = default); 8 (default) or 7 data bits; 1 (default) or 2 stop bits; no parity (default), even, odd, mark, or space parity

Flex I/O control: 4 analog input or digital input/output (configurable), (1) 3.5 mm captive screw connector, 5 pole

Digital inputs: Input voltage range 0 to 24 VDC, clamped at +30 VDC, Input impedance 29k ohms, Programmable pullup 1k ohms to +5 VDC

Baud rate and protocol (RS-232) 300 to 115200 baud (9600 baud = default); 8 (default) or 7 data bits; 1 (default) or 2 stop bits; no parity (default), even, odd, mark, or space parity

Relay control: 8 normally open relays, Relay control connectors, (4) 3.5 mm captive screw connectors, 4 pole, Relay control contact rating 24 VDC, 1 A

eBUS control: eBUS control ports (1) 3.5 mm captive screw connector, 5 pole (uses 4 poles), eBUS pin configuration: +V = +12 VDC; +S = + signal; -S = - signal; G = ground

Provide:

2-Each, Extron, IPCP 550, 60-1418-01, IP Link Pro Controller. – Or Equal

3-Each, Extron RSU 129, 60-190-01, Universal Rack Shelf Kit. – Or Equal

b. TP2-1 and TP2-2

Screen type: Active matrix TFT color display

Size: 12.1" (30.7 cm), measured diagonally

Resolution: 1280x800

Dot/pixel pitch: 125 dpi

Aspect ratio: Widescreen

Color depth: 24-bit, 16.7 million colors

Transparency: 8 bit alpha channel

Brightness: 360 nits (cd/m2)

Contrast: 950:1

Backlight: LED

Viewing angle: ±88° horizontal, ±88° vertical

Touch screen: Capacitive

Memory: SDRAM 512 MB, Flash 512 MB

2-Each, Extron TLP Pro 1220TG, 60-1341-02, 12" Tabletop TouchLink Pro Touch panel. – Or Equal

c. POE1-1 & POE1-2

Provide:

2-Each, Extron, XTP PI 140, 60-1363-01 Power injector. – Or Equal

d. NETSWT2-1 & NETSWT2-2

Provide:

2-Each, Cisco SG300-20, SRW2016-K9-NA, 20-Port Gigabit Ethernet Switch. – Or Equal

5. Racks and Misc.

a. RACKs, Existing OCFA furnished

b. Power Strips/conditioners

Maximum Output Current: 20 amps

Line Cord: Captive 3/12 AWG, 10 ft. black cord with NEMA 20 plug

Pull-out Lights: Two multi-LED, dimmable lamps

BNC Socket w/Switch: Rear rack lamp, 12VAC 500MA max (lamp not included)

Operating Voltage: 90 to 139 VAC

Spike Protection Mode: Line to neutral, zero ground leakage

Spike Clamping Voltage: 188 VAC peak @ 3,000 Amps

Response Time: 1 nanosecond

Maximum Surge Current: 6,500 Amps

Noise Attenuation: 10 dB @ 10 kHz, 40 dB @ 100 kHz, 50 dB @ 500 kHz

Dimensions: 19” W x 10.5” D x 1.75” H

Weight: 12 lbs.

Power Consumption: 12 watts

Safety Listing: cTUVus

Provide:

2-Each, Furman, PL-8 PRO-C – Or Equal

c. WKYBDMS1-1 and WKYBDMS1-2

RF Wireless keyboard & optical mouse, 50' range minimum (for OFE PCs)

2-Each, Wireless Computing RF-412 or equal

D. Classrooms D106 & D107

1. Digital Video Equipment

a. PROJ1-1 & PROJ1-2

Filter: Long lasting eco filter (up to 15,000 hours)

Brightness: 4,001 to 6,000 lm

Diagonal Screen Size: 1.02–10.16 m (40–400 inches) (16:10 aspect ratio

Technology: LCD, highly durable optical engine with inorganic LCD panels and polarizers providing up to 10,000 hours of maintenance free service.

Resolution: WUXGA, 1920 x 1200

Lens: Standard or as needed

Provide:

2-Each, Panasonic PT-EZ570UL, 5000 ANSI Lumen, 1920 x 1200 (16:10), 3 LCD, Projector. – Or Equal

2-Each, Panasonic ET-LAE200, projector lamp, spare. – Or Equal

2-Each, Panasonic ET-REF200, projector filter, spare. – Or Equal

2-Each, Chief Mfg. RPMA302, RPA Elite Universal & Custom Ceiling Projector Mounts with Keyed Locking. – Or Equal

b. SCN1-1 & SCN1-2

2-Each, OCFA Furnished Da-Lite Manual Pull-Down Screen.

c. DTPSWT1-1 & DTPSWT1-2

All‑in‑one 8x6 4K matrix switcher, scaler, audio DSP with AEC,

Two DTP inputs and six HDMI inputs

Two HDMI outputs and four independently scaled DTP outputs

4K matrix switching and scaling with selectable seamless transitions and logo keying

Integrated DTP inputs and outputs support transmission of video, control, and audio up to 330 feet (100 meters) over a shielded CATx cable

Vector™ 4K scaling engine

4K matrix switching and scaling with selectable seamless transitions and logo keying

Selectable scaled DTP output rates from 640x480 to 4K

Provide:

2-Each, Extron DTP CrossPoint 86 4K, 60-1382-01, Digital Switcher, Preamp Output, w/o Amplifier and Control Processor, 4K backbone. – Or Equal

d. DTPTX1-1 & DTPTX1-2

Transmits HDMI or analog video, control, and analog audio up to 230 feet (70 meters) over a shielded CATx cable

Inputs: One HDMI, one VGA on 15‑pin HD, two 3.5 mm stereo mini jacks for audio

One HDMI input and one VGA input — The DTP T UWP 232 D allows for switching between HDMI and analog video sources.

Auto‑switching between inputs

Supports computer and video resolutions up to 1920x1200, including 1080p/60 and 2K

Analog stereo audio embedding

Extron XTP DTP 24 shielded twisted pair cable is strongly recommended for optimal performance

Independent analog audio inputs

Supports multiple embedded audio formats

Bidirectional RS‑232 and unidirectional IR pass‑through for AV device control

Remote power capability

Digital conversion of analog input signals

HDCP compliant

Supported HDMI specification features include data rates up to 6.75 Gbps, 3D, and HD lossless audio formats

EDID Minder

Supports EDID and HDCP transmission

RS-232 control

Contact closure control port

Mounts in an included two-gang Decora®‑style wall plate

Provide:

2-Each, Extron DTP T UWP 232 D, 60-1366-13, DTP Transmitter, HDMI, VGA, WP Decora, White. – Or Equal

e. DTPRX1-1 to DTPRX1-8

Receives HDMI plus control and analog audio up to 230 feet (70 meters) over a shielded CATx cable — The DTP HDMI 4K 230 Rx provides high reliability and maximum performance on an economical and easily installed cable infrastructure.

Outputs: One HDMI, stereo audio on captive screw

Supports computer and video resolutions up to 4K

Extron XTP DTP 24 shielded twisted pair cable is strongly recommended for optimal performance

Supports multiple embedded audio formats

Supported HDMI specification features include data rates up to 10.2 Gbps, Deep Color up to 12-bit, 3D, HD lossless audio formats, and CEC pass-through

HDCP 2.2 compliant

Supports EDID and HDCP transmission.

Bidirectional RS-232 and IR for AV device control.

Remote power capability

Provide:

8-Each, Extron DTP HDMI 4K 230 Rx, 60-1271-13, DTP HDMI Receiver. – Or Equal

f. BD1-1 & BD1-2

Digital media player (Blu-ray Disc, DVD, CD, USB device [mass storage class]) AVCHD playback format

Supported Disc Formats: Blu-ray Disc: BD25, BD50, BD-ROM, BD-R, BD-RE

DVD: DVD, DVD+R, DVD-R, DVD+RW, DVD-RW

CD: CD, CD-R, CD-RW, DTS Music Disc (DTS Audio CD, 5.1 Music Disc), HDCD, Super Video CD (SVCD), Video CD (VCD)

Video Resolutions: Auto, 480i/576i, 480p/576p, 720p, 1080i, 1080p

Aspect Ratios: 16:9 Full, 16:9 Normal, 4:3 Pan & Scan, 4:3 Letterbox

System NTSC, PAL, Multi (if supported by TV)

HDMI Color Space: RGB PC Level, RGB Video Level, YCbCr (4:4:4), YCbCr 4:2:2

Output: HDMI > v1.4 (3D), HDCP 1.4

Decoding: Video: DivX 3, 4, 5, 6; DivX HD; MPEG-1; MPEG-2; MPEG-4; MPEG-4 AVC (H.264); VC-1 (Windows Media Video); Xvid

Audio: AAC; Dolby Digital; Dolby Digital Plus; Dolby TrueHD; DTS Digital Surround; DTS-HD; WMA

Serial Remote Connector: 9-pin D-Sub female, RS-232C, Mode: Full duplex, Baud Rate: 9600 or 38400 bps (selectable)

Ethernet Connector: LAN port, Standards: Ethernet (10 Mbps), Fast Ethernet (100 Mbps)

Provide:

2-Each, Denon DN-500BD, Blu-Ray Disk Player. – Or Equal

g. STRMENDCR1-1 & STRMENDCR 1-2

Process two high resolution AV signals from up to five available inputs

Stream and record simultaneously

High quality scaling with flexible two-window management

Produces MP4 media files that are compatible with virtually any media player

Available with 400 Gigabytes of internal solid state storage to allow more time between content transfers

Save recordings to internal solid state drive, external USB storage, or a defined network storage directory

Stream concurrently at two resolutions and bit rates

Stream at resolutions from 512x288 to 1080p/30

Internal Solid State Storage

HDCP-compliant input and output signal management

HDMI-embedded stereo audio or analog stereo input and output signal support

Audio mixing and DSP functionality

RS‑232, Ethernet, and digital I/O control ports

Supports source resolutions up to 1920x1200, including HDTV 1080p/60

Standards-based H.264 / MPEG‑4 AVC video compression

Provide:

2-Each, Extron SMP 351, 60-1324-01, H.264 Streaming Media Processor, Standard Version – 80 GB SSD. – Or Equal

h. STRMDCR1-1 & STRMDCR 1-2

Supports live IP video stream decoding — Use with the SME 100 to provide a complete end-to-end streaming solution.

Supports streaming resolutions from 480x320 up to 1080p/60 — Supports a vast array of resolutions to meet varying network conditions, topologies, source and display requirements.

AV media file playback from network shares — Use as a playback device for on-demand playback of network-accessible media files.

Compatible with MP4 and MPEG-2 Transport Stream container formats — Playback common H.264 media player formats from accessible network drives.

Selectable audio output format: HDMI-embedded stereo audio or analog stereo audio — Flexible, cost effective use of display speakers or existing audio systems.

Integrated scaler offers selectable output resolutions from 640x480 to 1920x1200 — Wide range of output resolutions ensure that consistent, reliable image quality is presented on many different types of displays.

Decode at native resolution — The output rate and resolution can be configured to automatically follow the native format of the decoded video stream.

EDID defined scaling — The output rate and resolution can be configured for automatic selection based on EDID communication with the connected display.

Ethernet to RS-232 pass through control — Integration friendly Ethernet to RS-232 pass through for display control.

Fill/Follow/Fit Aspect Ratio Management — Decoded video can fill a display, maintain aspect ratio, or maintain uniformity, presenting imagery that meets customer expectations.

Provide:

2-Each, Extron SMD 101, 60-1305-01, H.264 Streaming Media Decoder.

i. WCLB1-1

Wireless collaboration gateway with WAP

Integrated dual band wireless access point at 2.4 GHz or 5 GHz

Provides full screen mirroring for Apple iOS devices1

Simultaneous content display from up to four different personal devices

Dedicated mobile app, MirrorOp® for Extron ShareLink™, for reliable iOS and Android content sharing

Collaboration mode allows any attendee to display content and control the presentation

Full-motion video playback from laptops, enables display of media files from a Windows or OS X computer at up to 30 fps for a smooth viewing experience

Security codes ensure content is delivered only to the selected display devices

Displays content directly from a USB flash drive

Full screen or four-window display

Power over Ethernet, or PoE, eliminates the need for a local power supply

Gigabit Ethernet

Three USB ports for peripheral support

HDMI and VGA video outputs

Plenum rated - meets UL 2043 for heat and smoke release, excluding power supply

Front-mounted antennas for easy rack installation

1-Each, Extron ShareLink 250, 60-1508-01 or equal

j. CATVRX1-1 & CATVRX1-2

RF Input: Air/Cable, ‘F’, female, 75 ohm impedance, supports dual Cable and Air tuning with optional RF-AB RF A-B Switch, New digital RF tuning for improved sensitivity

HD Outputs: HDMI and switchable RGB/Component outputs operate simultaneously

HDMI: HDMI receptacle (720p@59.94 Hz, 1080p/1080i/480p@ 29.97 Hz), version 1.3, PCM/AC3 digital audio, HDCP

Audio Outputs: All operate simultaneously, including HDMI audio

Digital Audio: S/PDIF: Coax and TOSlink optical output, Dolby 5.1, PCM, or PCM variable

Stereo Audio: 2 stereo RCA female jacks, variable level

Control Options: RJ-45: 10/100 Ethernet connector, Telnet control and onboard Web page. Supports 2 Telnet sessions, RS-232: DB-9 male, RS-232 data link to control system (protocol is the same for RS-232 or Telnet), 300 to 19,200 baud (9600 default), 8 data bits, no parity, 1 stop bit

Provide:

2-Each, Contemporary Research 232-ATSC 4, Off Air HDTV tuner with RS232 control. – Or Equal

2-Each, Contemporary Research RK1, Single Rack Kit, 1RU. – Or Equal

k. CAM1-1 & CAM1-2

Image Sensor: 1/2.8”, 2.38 Megapixel, Full HD (1080p/60 native) High-speed, Low Noise CMOS Image Sensor

Lens: 30X Optical Zoom

Horizontal FOV 65° Wide end to 2.3° Tele end, f=4.3mm to 129mm, F1.6 to F4.7

Supported Resolutions HD Resolutions: 1080p/60/59.94/50/30/25, 1080i/60/59.94/50, 720p/60/59.94/50/30/25, 16:9 Format

Tri-Synchronous Motion: Concurrent PTZ motor movement and simultaneous PTZ arrival at a stored preset.

Advanced ISP: Vivid and accurate color with extremely fast, razor sharp automatic focus and iris routines.

S/N Ratio > 50 dB

Minimum Illumination 1.4 lux (F1.6, 50IRE), Recommended illumination >100 lux and above (Normal office lighting is 375-500 lux)

Minimum Distance 10mm (wide end) to 1.2m (tele end)

Pan & Tilt Angle/Speed Pan/Tilt Angles: ±160°, Tilt: +90° to -30°

Pan/Tilt Speeds: Both Axes 0.35°/sec to 120°/sec

Sync System Internal

Control Methods Ethernet for Internal Web Pages and Telnet, IR Remote Commander and RS-232 for external controllers

Dimensions/Weight 6.942” (176.3mm) H x 7.056” (179.2 mm) W x 6.757” (171.6mm) D

4.85 lbs. (2.199923 kg)

Provide:

2-Each, Vaddio RoboSHOT 30 QCCU, 999-9917-000W, HD quality PTZ camera, CCU quick connect and wall shelf. – Or Equal

l. CAM2-1 and CAM2-2

Image Device: 1/2.8”, 2.14 Megapixel, Full HD (1080p/60 native) High-speed, Low Noise CMOS Image Sensor

Supported Resolutions HD Resolutions: 1080p/60/59.94/50/30/25, 1080i/60/59.94/50, 720p/60/59.94/50/30/25, Format varies depending on video resolution, USB 2.0 and 3.0 video resolutions/frame rates, all USB resolutions uncompressed

Streaming, IP (H.264, RTSP + USB 3.0 (UVC)

Lens: 10X Optical Zoom, Super Wide 11X Optical Zoom

S/N Ratio > 50 dB

Minimum Illumination Recommended illumination >100 lux

Minimum Distance 10mm (wide end) to 1.0m (tele end)

Pan & Tilt Angle/Speed Pan/Tilt Angles: ±170°, Tilt: +90° to -30°

Pan/Tilt Speeds: Both Axes 90°/sec

Horizontal FOV 67° Wide end (74° degrees in super wide mode) to 7.6° Tele end, f=3.8mm to 41.8mm, F1.8 to F3.4

Control Methods Ethernet for Internal Web Pages and Telnet, IR Remote Commander and RS-232 for external controllers

Gain – Auto or Manual

Backlight Compensation – On or Off

White Balance – Auto, Manual, One-Push

Noise Reduction – On or Off

Aperture/Detail – 16 steps (via all remote management interfaces)

Dimensions/Weight 6.3” (163 mm) H x 6.1” (155 mm) W x 5.5” (145 mm) D

3 lbs. (1.36 kg)

Provide:

1-Each, Vaddio ClearSHOT 10 USB, 999-9990-000W, HD quality PTZ camera, CCU quick connect and wall shelf. – Or Equal

m. DISP4-1 & DISP4-2

2-Each OCFA furnished and installed LCD 55” displays.

n. WCLB1-1 and WCLB1-2

Wireless collaboration gateway with WAP

Integrated dual band wireless access point at 2.4 GHz or 5 GHz

Provides full screen mirroring for Apple iOS devices1

Simultaneous content display from up to four different personal devices

Dedicated mobile app, MirrorOp® for Extron ShareLink™, for reliable iOS and Android content sharing

Collaboration mode allows any attendee to display content and control the presentation

Full-motion video playback from laptops, enables display of media files from a Windows or OS X computer at up to 30 fps for a smooth viewing experience

Security codes ensure content is delivered only to the selected display devices

Displays content directly from a USB flash drive

Full screen or four-window display

Power over Ethernet, or PoE, eliminates the need for a local power supply

Gigabit Ethernet

Three USB ports for peripheral support

HDMI and VGA video outputs

Plenum rated - meets UL 2043 for heat and smoke release, excluding power supply

Front-mounted antennas for easy rack installation

1-Each, Extron ShareLink 250, 60-1508-01 or equal

o. HDMISW1-1 and HDMISW1-2

Switches HDMI video and embedded multi-channel digital audio

Inputs: 4 female HDMI type A connectors

Output: 1 female HDMI type-A connector

EDID Minder® automatically manages EDID communication between connected devices

Supports computer video up to 1920x1200, including HDTV 1080p/60 and 2K

Supported HDMI specification features include data rates up to 6.75 Gbps, Deep Color up to 12-bit, 3D, Lip Sync, and HD lossless audio formats

HDCP compliant

Automatic color bit depth management

HDMI to DVI Interface Format Correction

Automatic input cable equalization to 50 feet at 1080p/60 with 8-bit color

Provides +5 VDC, 250 mA power on the output for external peripheral devices

Front panel security lockout

Multiple control options including front panel, RS-232, IR, contact closure, and auto-input switching

1-Each, Extron SW HD 4K, 60-1484-01, - or Equal

2. Audio Equipment

a. DSP1-1 & DSP1-2

12 mic/line level inputs with AEC, 8 mic/line level outputs

Up to 8 channels of configurable USB audio

RS-232 serial port

4-pin GPIO

SIP VoIP interface via a RJ-45 connector

Provide:

2-Each, Biamp Tesira Forte AVB AI, Digital Signal Processor. – Or Equal

b. WMRX1-1 & WMRX1-2

RF Carrier Frequency Range 470–937.5 MHz, varies by region

Image Rejection >70 dB, typical

Latency <2.9 ms

RF Sensitivity -97 dBm at 10-5 BER

Working Range 100 m (328 ft.) line-of-sight Note: Actual range depends on

RF signal absorption, reflection and interference.

Audio Frequency Range 20 Hz to 20 kHz Note: Dependent on microphone type.

Audio Dynamic Range >120 dB, A-weighted, typical (System Gain @ +10)

Total Harmonic Distortion <0.1%, (−12 dBFS input, System Gain @ +10)

Provide:

2-Each, Shure QLXD24/B58, Digital Wireless Microphone System with Hand Held Mic Transmitter. – Or Equal

c. WMRX2-1 & WMRX2-2

RF Carrier Frequency Range 470–937.5 MHz, varies by region

Image Rejection >70 dB, typical

Latency <2.9 ms

RF Sensitivity -97 dBm at 10-5 BER

Working Range 100 m (328 ft.) line-of-sight Note: Actual range depends on

RF signal absorption, reflection and interference.

Audio Frequency Range 20 Hz to 20 kHz Note: Dependent on microphone type.

Audio Dynamic Range >120 dB, A-weighted, typical (System Gain @ +10)

Total Harmonic Distortion <0.1%, (−12 dBFS input, System Gain @ +10)

Provide:

2-Each, Shure QLXD14/83, Digital Wireless Microphone System with Belt pack transmitter and lapel microphone. – Or Equal

d. CMIC1-1 to CMIC1-8

Provide:

Microflex ceiling microphone, cardioid pick-up, pre-amp, mounting plate, white,

8-Each, Shure MX22WP/C or equal

e. AMP1-1 & AMP1-2

1-Each, QSC Audio, CX302V Power Amplifier. (OFE)

f. SPKR3-1 to SPKR3-2

2-Each, Tannoy wall Speakers. (OFE)

3. ALS System – New System, should be compatible with existing ALS systems

a. ALSTX1-1 & ALSTX1-2

Provide:

2-Each, Sennheiser SZI1015-W, IR Assistive Listening System Radiator Panel 95KHz. – Or Equal

2-Each, Sennheiser SI 1015, Wideband Modulator 95KHz. – Or Equal

2-Each, Sennheiser EZT3011, Induction loops. – Or Equal

4-Each, Sennheiser EKI830, IR receiver. – Or Equal

2-Each, Sennheiser EP01-100, single earphone. – Or Equal

4. Control System

a. CNTR1-1 & CNTL1-2

Memory: SDRAM 512 MB, Flash 4.5 GB

Software and control options: Software Extron Global Configurator® Plus and Professional for Windows®

Ethernet control: Network interface controllers (NICs) 1, Connector 1 female RJ-45 connector, Data rate: 0/100/1000Base-T, half/full duplex with autodetect.

Protocols: DHCP, DNS, HTTP, HTTPS, ICMP, NTP, SFTP, SMTP, SNMP, SSH, TCP/IP, UDP/IP

Default settings: Link speed and duplex level = autodetected

Serial control: 2 bidirectional RS-232, RS-422, RS-485 (ports 7 and 8), 6 bidirectional RS-232 (ports 1 through 6), (2) 3.5 mm captive screw connectors, 5 pole, (6) 3.5 mm captive screw connectors, 3 pole

Baud rate and protocol: 300 to 115200 baud (9600 baud = default); 8 (default) or 7 data bits; 1 (default) or 2 stop bits; no parity (default), even, odd, mark, or space parity

Flex I/O control: 4 analog input or digital input/output (configurable), (1) 3.5 mm captive screw connector, 5 pole

Digital inputs: Input voltage range 0 to 24 VDC, clamped at +30 VDC, Input impedance 29k ohms, Programmable pullup 1k ohms to +5 VDC

Baud rate and protocol (RS-232) 300 to 115200 baud (9600 baud = default); 8 (default) or 7 data bits; 1 (default) or 2 stop bits; no parity (default), even, odd, mark, or space parity

Relay control: 8 normally open relays, Relay control connectors, (4) 3.5 mm captive screw connectors, 4 pole, Relay control contact rating 24 VDC, 1 A

eBUS control: eBUS control ports (1) 3.5 mm captive screw connector, 5 pole (uses 4 poles), eBUS pin configuration: +V = +12 VDC; +S = + signal; -S = - signal; G = ground

Provide:

1-Each, Extron, IPCP 550, 60-1418-01, IP Link Pro Controller. – Or Equal

1-Each, Extron RSU 129, 60-190-01, Universal Rack Shelf Kit. – Or Equal

b. TP2-1 and TP2-2

Screen type: Active matrix TFT color display

Size: 12.1" (30.7 cm), measured diagonally

Resolution: 1280x800

Dot/pixel pitch: 125 dpi

Aspect ratio: Widescreen

Color depth: 24-bit, 16.7 million colors

Transparency: 8 bit alpha channel

Brightness: 360 nits (cd/m2)

Contrast: 950:1

Backlight: LED

Viewing angle: ±88° horizontal, ±88° vertical

Touch screen: Capacitive

Memory: SDRAM 512 MB, Flash 512 MB

2-Each, Extron TLP Pro 1220TG, 60-1341-02, 12" Tabletop TouchLink Pro Touch panel. – Or Equal

c. POE1-1 & POE1-2

Provide:

2-Each, Extron, XTP PI 140, 60-1363-01 Power injector. – Or Equal

d. NETSWT2-1 & NETSWT2-2

Provide:

1-Each, Cisco SG300-20, SRW2016-K9-NA, 20-Port Gigabit Ethernet Switch. – Or Equal

5. Racks and Misc.

a. RACKs, Existing OCFA furnished

b. Power Strips/conditioners

Maximum Output Current: 20 amps

Line Cord: Captive 3/12 AWG, 10 ft. black cord with NEMA 20 plug

Pull-out Lights: Two multi-LED, dimmable lamps

BNC Socket w/Switch: Rear rack lamp, 12VAC 500MA max (lamp not included)

Operating Voltage: 90 to 139 VAC

Spike Protection Mode: Line to neutral, zero ground leakage

Spike Clamping Voltage: 188 VAC peak @ 3,000 Amps

Response Time: 1 nanosecond

Maximum Surge Current: 6,500 Amps

Noise Attenuation: 10 dB @ 10 kHz, 40 dB @ 100 kHz, 50 dB @ 500 kHz

Dimensions: 19” W x 10.5” D x 1.75” H

Weight: 12 lbs.

Power Consumption: 12 watts

Safety Listing: cTUVus

Provide:

2-Each, Furman, PL-8 PRO-C – Or Equal

c. WKYBDMS1-1 and WKYBDMS1-2

RF Wireless keyboard & optical mouse, 50' range minimum (for OFE PCs)

2-Each, Wireless Computing RF-412 or equal

J. ADA-COMPLIANT ASSISTIVE LISTENING SYSTEM:

A complete system shall be furnished and installed to meet the latest ADA 2010 requirements for hard-of-hearing for each system. Furnish portable receivers in as indicated in the table below. The Stationary Assistive Listening System shall be integrated into and work in conjunction with the sound reinforcement systems. Mount the necessary stationary transmitters into the equipment racks or a wall cabinet and adjust as required for total coverage of seating areas Assistive Listening Transmitters shall operate in the IR.

ADA Table 219.3 Receivers for Assistive Listening Systems

Capacity of Seating in Assembly Area	Minimum Number of Required Receivers	Minimum Number or Required Receivers Required to be Hearing Aid Compatible
50 or less	2	2
51 to 200	2, plus 1 per 25 seats over 50 seats[1]	2

201 to 500	2, plus 1 per 25 seats over 50 seats[1]	1 per 4 receivers[1]
501 to 1000	20, plus 1 per 33 seats over 500 seats[1]	1 per 4 receivers[1]
1001 to 2000	35, plus 1 per 50 seats over 1000 seats[1]	1 per 4 receivers[1]
2001 and over	55, plus 1 per 100 seats over 2000 seats[1]	1 per 4 receivers[1]

Note: 1. or fraction thereof.

2.06 GENERAL PRODUCTS FOR SYSTEMS

CABLE – ALL SPACES

1. Speaker Cable, 70-Volt distribution, Plenum Rated 2-Conductor, 16 AWG, unshielded pair: Extron, West Penn, Belden or equal.
2. Speaker Cable, 8 Ohm distribution, Plenum Rated 2-Conductor, 12 AWG, unshielded pair, Extron, West Penn, Belden, or equal.
3. Analog Microphone/Line Level Installation Cable, 22 AWG conductor, jacketed, shielded, twisted-pair, Plenum Rated: Extron, West Penn, Belden or equal.
4. Pre-Terminated HDMI, DVI Display Port cables: Extron, or equal. (Note, cables must be rated for HDMI 1.3a specifications or better, capable of passing 1080p or 1920 x 1200 resolution at distances less than 35' without an active equalizer.)
5. Digital Video Switcher, CAT-6A, Shielded Twisted Pair Cable with braided shield and drain wire for HDBase-T Systems, Plenum Rated: Extron or to HDBase-T Standard equivalent (Quantity as required). With Extron Shielded RJ-45, or HDBase-T standard connectors. Contractor is responsible for maintaining braided shield and drain wire from plug to plug per HDBase-T standard.
6. Control System Device Control (RS232, Relay or Contact Closure): (Dual 22 AWG shielded twisted pairs with individual drain wires, each pair is color-coded Red/Black and Green/White to simplify identification.) Plenum Rated: Extron, West Penn, Belden or equivalent.
7. Data Network CAT-5E, OCFA standard General Cable, 24AWG 5ENP4P24-BL-P-GCC-PV, plenum rated.
8. Provide plenum rated cable for all cable where required by code. Any cable changes or substitutions must be submitted and approved prior to installation. Non-compliant cable that has been installed without approval will be replaced at the AV Contractor's expense.

PART 3 – EXECUTION

3.01 GENERAL INSTALLATION DESCRIPTION

A. The installation, configuration and wiring of the system shall be executed in accordance with the drawings and the equipment manufacturer's installation instructions and guidelines. Should any variations in these requirements occur, the Contractor shall notify the architect before making any changes. It shall be the responsibility of the factory-authorized installer of the approved equipment to install the equipment and guarantee the system to operate as per plans and specifications.

B. Furnish all Additional conduits, AV Back-boxes, conductors, equipment plugs, terminal strips, etc., and labor to install a complete and operable system.

C. The cables within the rack or cabinets shall be carefully cabled and laced with Velcro wraps. All cables shall be numbered for identification. Cables should have enough slack to allow removal of equipment for service without having to cut multiple Velcro ties or wire wraps. Power plugs need to be labeled at PDU.

D. Splices of conductors in underground pull boxes are not permitted.

E. The labor employed by the Contractor shall be regularly employed in the installation and repair of communication systems and shall be acceptable to the OCFA and architect to engage in the installation and service of this system.

F. The Contractor shall thoroughly clean all equipment and materials. All exposed parts of the equipment, cabinets, and other equipment shall be left in a clean condition, unblemished and free of all dirt, dust, smudges, spots, fingerprints, etc., The Contractor shall remove all debris and rubbish occasioned by the work from the site. The Contractor shall thoroughly clean all buildings of any dirt, debris, rubbish, marks, etc., Caused by the performance of this work.

G. The system must meet all local and other prevailing codes.

H. All cabling installations shall be performed by qualified technicians.

I. All cabling shall be splice free.

J. In order to ensure the least amount of cable un-twisting, it is required that all cables shall be stripped using a special tool.

K. The use of lubricants (i.e. Yellow 77) to facilitate the installation of cables in conduits is highly discouraged. If such a lubricant must be used, the Contractor shall verify the acceptability of the lubricant to be used with the cable manufacturer, prior to using such a lubricant.

L. Under no circumstance are "channel locks" or other pliers to be used.

M. Plenum rated cable may be run exposed above ceilings, provided the cabling is supported independent of other utilities such as conduits, pipes, and the ceiling support systems. The cables shall not be laid directly on the ceiling panels. The use of cable ties shall be done in accordance with the cable manufacturer's requirements. The cable jacket composition must meet local and all other prevailing fire and safety codes.

N. Labeling

1. Wiring Labels: At all connection points for all types of cable & wiring, a label strip shall be attached indicating the name/number of that cable or wire as follows:

    a. At internal locations (inside racks, cabinets, or boxes), a pressure sensitive label shall be used.

    b. At external locations, a printed label covered with clear shrink wrap or approved labeling system shall be used.

2. Equipment Labels: All active components shall have labels at the front and rear. Labels shall be applied plumb and neat and shall not cover any equipment lights, recessed controls, or control labels.

    a. Front labels shall indicate functional use of equipment.

    b. Rear labels shall indicate system schematic reference designation.

O. All firewalls penetrated by Contractor shall be sealed by use a non-permanent fire blanket or other method in compliance with the current edition of National Fire Protection Association (NFPA) and the National Electric Code (NEC) or other prevailing code. The Contractor must not use concrete or other non-removable substance for fire stopping on cable trays, wire ways or conduits. Contractors who use this method will be required to replace all cables affected and provide the original specified access to each effected area.

P. Equipment Rack and Equipment Testing and Adjusting Procedures: Conduct procedures in fabrication shop. Verify safe and proper operation of all components, devices, or equipment, establish nominal signal levels within the systems and verify the absence of extraneous or degrading signals. Make all preliminary adjustments and document the setting of all controls, parameters of all corrective networks, voltages at key system interconnection points, gains and losses, as applicable. Submit test report with color photographs of each equipment rack, front and back. Perform at least the following procedures:

1. Preliminary: Verify:

   a. Grounding of devices and equipment. Integrity of signal and electrical system ground connections.

   b. Proper provision of power to devices and equipment.

   c. Integrity of all insulation, shield terminations and connections.

   d. Integrity of soldered connections. Absence of solder splatter, solder bridges.

   e. Absence of debris of any kind, tools, etc.

   f. Routing and dressing of wire and cable.

   g. All wiring, including polarity and continuity, including conformance with wire designations on running sheets, field and shop drawings.

   h. Mechanical integrity of all support provisions.

2. All new equipment racks shall be bolted to the floor/millwork by the Contractor once the OCFA determines the exact location for new rack. Contractor to verify the original Middle Atlantic racks are bolted to floor and seismic bracing are installed to code. The earthquake mounting brackets for each rack kit shall be screwed to studs, not drywall. All equipment shall be serviceable in the racks final location – the need to unbolt racking equipment to access or service equipment is not acceptable.

Q. Cleaning

1. Clean each section or area of where the work was conducted after completion to permit immediate use of the area. Remove and discard all refuse, rubbish, and debris.

2. The Contractor shall ensure that all recyclable and environmentally-hazardous waste materials are disposed properly.

3. Make good all existing structures, surfaces, and utilities affected by cutting, coring, mounting, drilling, or other new work.

4. Clean all furnished equipment of dust, dirt, finger prints, smudge, and other material prior to calling for a Substantial Performance of Work Review or Completion of Work Review.

3.02 PROTECTION

A. During the installation phase and up to the date of achieving Substantial Performance of Work, protect finished or unfinished work against damage or loss. In the event of such damage or loss, immediately replace or repair such work or equipment at no cost to the OCFA.

3.03 SPECIFIC SYSTEM INSTALLATION REQUIREMENTS

A. The installer shall, upon completion of the system, orient all antennas, speakers, Align all projectors, screens and displays, adjust all controls, etc., to provide a system operating at maximum capability.

B. Submit block diagram and shop drawing of equipment.

3.04 GENERAL TESTING REQUIREMENTS

A. Provide all instruments for testing and demonstrating in the presence of the OCFA's inspector that the all Audio, Digital Video and Control parameters are as stated in the factory data sheets. Check all circuits and wiring to verify they are free of shorts and grounds.

3.05 SPECIFIC AUDIO SYSTEM TESTING REQUIREMENTS

A. Furnish all laptops, software, equipment and personnel to conduct these tests in accordance with the performance specification requirements. ANSI and EIA Standards.

B. Audio Testing and Adjustment:

1. Adjust all audio levels.

C. Provide full flat panel monitor display calibration and adjustments for optimal picture quality for a single HDMI input. Provide proper aspect ratio configuration for both 16:9 and 16:10 sources. Use a test generator (I.E. Extron VTG or equal): for all setup verification, and verify proper image configuration with the all inputs. (Contract the OCFA's Technical Representative prior to final adjustment to coordinate).

D. Controls: Adjust all controls to achieve the specified performance. Provide shaft-locks or covers for all level controls, as appropriate to prevent unauthorized gain changes. Audiovisual Contractor will confirm that all control system operations are properly programmed and repeatable.

E. Testing Report: Provide a letter/report documenting the results of these preliminary tests, including amplifier gain/level settings, crossover filter settings, and AVS equalization curves for review by the AV Design Consultant.

3.06 ACCEPTANCE TESTS

A. Qualification for Acceptance: Subsequent to completing preliminary testing, the Audiovisual Contractor shall furnish the OFCA Project Manager with the letter/report documenting the results of the preliminary tests and two (2) copies of "as-built" wiring diagrams of the entire system including the connection numbers, and their locations. The receipt of this documentation will constitute the Audiovisual Contractor's acknowledgment that the installation is complete and conforms to this specification, and is ready to be reviewed and tested by the AV Design Consultant.

B. Acceptance Test: The Consultant, OCFA's Representative and/or Project Manager shall be present during the acceptance testing and require the assistance and cooperation of the Contractor. Provide personnel who participated in the actual installation and preliminary testing and adjustment of the Audiovisual Systems.

1. Equipment cabinet keys and any tamper-proof fastener tools must be available to the AV Design Consultant. Delays associated with failure to access the equipment will be back-charged to the Contractor at the Audiovisual Systems Design Consultant's current hourly rates.

2. Each major component shall be demonstrated to function, as specified.

3. The Contractor shall provide a laptop with all manufacturer supplied configuration software necessary for communicating with DSP Audio Matrix Mixers, and the Modular Audiovisual Switchers. A review of system settings may be required for either of the programmable units at OCFA and the Audiovisual Systems Design Consultant's request, and settings may be adjusted if necessary.

C. Such tests may be performed on any piece of equipment or system. If any test shows the equipment or system is defective or does not comply with the specifications, the Contractor shall perform any remedies at his expense and pay the subsequent expenses of any retesting required.

D. Delays: If the acceptance of the system is delayed because it does not meet the specification requirements, the Contractor shall reimburse the OCFA for all expenses of consultants retained to represent the OCFA during the final acceptance testing. This will include costs associated with travel to the site, and include reimbursable business travel expenses.

3.07 SYSTEM DOCUMENTATION, TRAINING, AND FIELD SUPPORT

A. Operation and Maintenance Manuals: For each system, provide three (3) copies of system manuals per system, two (2) for the OCFA and one (1) for the Audiovisual Systems Design Consultant. Manuals shall be in adequately sized three-ring binders, clearly labeled on spine. Manuals shall contain the following:

1. Service Reference Cover Sheet: Provide a cover sheet with Contractor name, address, Email, WEB Address, telephone and Fax numbers.

2. System Operation Instructions: Step-by-step operating instructions for the basic day-to-day use of the system including power activation, connection of source devices, adjustment of volume levels, selection of sources, etc. Include illustrations and references to individual equipment manuals.

3. Equipment Manuals: Include copies of individual equipment operation manuals separated by tabbed dividers. Order THE manuals in nominal signal path order (i.e. sources first, amplifiers/loudspeakers last), followed by control system manuals, followed by miscellaneous manuals.

4. Equipment List: List all system equipment including, connectors and specialty hardware, by manufacturer and model and serial number.

   a. As-built Drawings: Provide one set, reduced 11”x17” foldout "as built" functional diagrams in clear plastic binder sleeves. Fold and insert drawings so that drawing title is clearly visible at the front of the sleeve. In addition, provide 2 full-size drawing sets.

   b. Provide software programmable device configuration files to the OCFA for all control system interfaces and computer-based files, and the DSP Audio Matrix Mixer. Store files on site in the system documentation binders in disk sleeves. Provide the files on CD-ROM.

5. Training: Provide hours as needed of system training to operator(s) designated by the OCFA. Training time is to be non-contiguous, in multiple separate sessions. Training sessions are to be digitally recorded upon OCFA request.

3.08 MISCELLANEOUS PROJECT REQUIREMENTS

A. Plan meetings and schedule Within thirty (30) calendar days after the date of award of the Contract, an initial planning meeting will be held with the successful bidder to clarify all requirements (systems, services, distribution methods, etc.), identify responsibilities, and schedule the events that will transpire during the implementation of the project. Within one (1) week of this initial meeting, the Contractor shall provide a written report and project schedule to clearly document the events and responsibilities associated with the project.

B. Site Cleaning: Throughout the progress of the plant construction, the Contractor shall keep the working area free from debris of all types and remove from the premises all rubbish resulting from any work done by Contractor. On a daily basis and at the completion of its work, the Contractor shall, to the extent possible, leave the premises in a clean and finished condition.

C. Safety Requirements: Contractor will utilize appropriate personnel and display warning signs, signals, flags and/or barricades at the work site to ensure adherence to safety regulations and as prudence requires.

D. Specification/Drawing Status: All specifications and drawings related to this project will be "frozen" after shop drawing approval. The OCFA reserves the right to negotiate any future changes with the Contractor at any time.

E. Upon approval of shop drawings, Contractor shall immediately place orders for all required materials, components, and supplies. In addition, Contractor shall secure and forward written confirmations (including orders and shipping dates) direct from each manufacturer/vendor to the OCFA's Project Manager.

F. Contractor shall expedite shipment of all materials, components and supplies, as necessary to ensure the successful completion of the Project by the date required. All costs for expediting shall be included within Contractor's pricing as provided below.

G. The system cost herein shall include administration/maintenance training for at least ten OCFA's representatives with a minimum allotment of sixteen (16) hours. All training shall include written and/or video materials that shall remain the property of OCFA. If materials are written, they shall be provided in quantities sufficient for each person trained; if materials are video, one copy of each will be required. The administration/maintenance training shall include, but not be limited to, the following:

1. Review of as-built documentation, including a site demonstration.

2. All warranty information.

3.09 DAMAGES

A. The Contractor will be held responsible for any and all damages to portions of the building caused by it, its employees or sub-contractors; including but not limited to:

1. Damage to any portion of the building caused by the movement of tools, materials or equipment.

2. Damage to any component of the construction of spaces.

3. Damage to the electrical distribution system.

4. Damage to the electrical, mechanical and/or life safety or other systems caused by inappropriate operation or connections made by the Contractor or other actions of Contractor.

5. Damage to the materials, tools and / or equipment of the OCFA, its consultants, agents and tenants.

3.10 INSPECTIONS

A. On-going inspections shall be performed during construction by the OCFA's Project Manager. All work shall be performed in a high quality manner and the overall appearance shall be clean, neat and orderly. The following points will be examined and must be satisfactorily complied with:

1. Are all cables properly labeled, from end-to-end?

2. Have all terminated cables been properly tested in accordance with the specifications for the specific category as well as tested for opens, shorts, polarity reversals, transposition and presence of AC and/or DC voltage?

3. Have the pathway guidelines been followed? Are all cable penetrations installed properly and fire stopped according to code?

4. Has the Contractor avoided excessive cable bending?

5. Is Cable fill correct?

6. Are terminations compatible with applications equipment?

7. Are connectors properly turned right side up in the Jack Panels or faceplates without cables wrapped or twisted?

8. Is the jacket maintained right up to the termination?

9. Are identification markings uniform, permanent and readable?

3.11 COMPLETION OF WORK

A. At the completion of the System, the Contractor shall restore to its former condition, all aspects of the project site and on a daily basis, shall remove all waste and excess materials, rubbish debris, tools and equipment resulting from or used in the services provided under this Contract. All clean up, restoration, and removal noted above will be by the Contractor and at no cost to OCFA. If the Contractor fails in its duties under this paragraph, OCFA may upon notice to the Contractor perform the necessary clean up and deduct the costs thereof from any amounts due or to become due to the Contractor. It shall be the Contractor's responsibility to remove trash from the areas it is working in and bring trash and debris to the Contractor provided dumpster.

B. Final Punch Walk: The Contractor and OCFA shall complete a final inspection to determinate if all conditions of the scope of work are completed to the OCFA's satisfaction. A "punch list" will be formulated within (2) days of the punch walk and be presented to the Contractor for completion prior to final project sign-off by the OCFA. If an item is missed during the punch walk or not included on the "punch list" for any reason, it does not release the Contractor from completing the scope of work as defined in the specification or drawings.

C. Contractor shall submit complete Record Documentation as outlined in submittals section prior to project sign-off by OCFA.

3.12 SYSTEM AND/OR NETWORK TESTING

A. Upon completion of installation, Contractor shall execute all of the required tests as summarized in this specification. When all such tests have been completed to OCFA's satisfaction and Manufacturer's specifications, Contractor shall give the OCFA written notice thereof.

B. Contractor must assume responsibility of assuring that the system and network interface installed operates properly, including any required coordination with other suppliers.

3.13 FINAL ACCEPTANCE

A. The OCFA or OCFA's representative may visit the site during the installation of the system to ensure that correct installation practices are being followed.

B. The OCFA or OCFA's representative will conduct a final job review once the Contractor has finished the job. This review will take place within one week after the Contractor notifies the OCFA.

C. Two (2) copies of all certification data and drawings for all identifications shall be provided to the OCFA before the OCFA's review.

D. The OCFA or OCFA's representative will review the installation and certification data prior to the system acceptance.

E. The OCFA or OCFA's representative may test some of the systems features to ensure that the certification data is correct. If a substantial discrepancy is found, the OCFA reserves the right to have an independent consultant perform a certification of the entire system. If such a procedure is undertaken, the cost of the testing will be billed back to the Contractor.

F. In the event that repairs or adjustments are necessary, the Contractor shall make these repairs at his own expense. All repairs shall be completed within 5 days from the time they are discovered.

G. The Contractor shall hand to the OCFA a copy of any applicable installation specific software configurations in CD format.

END OF SECTION

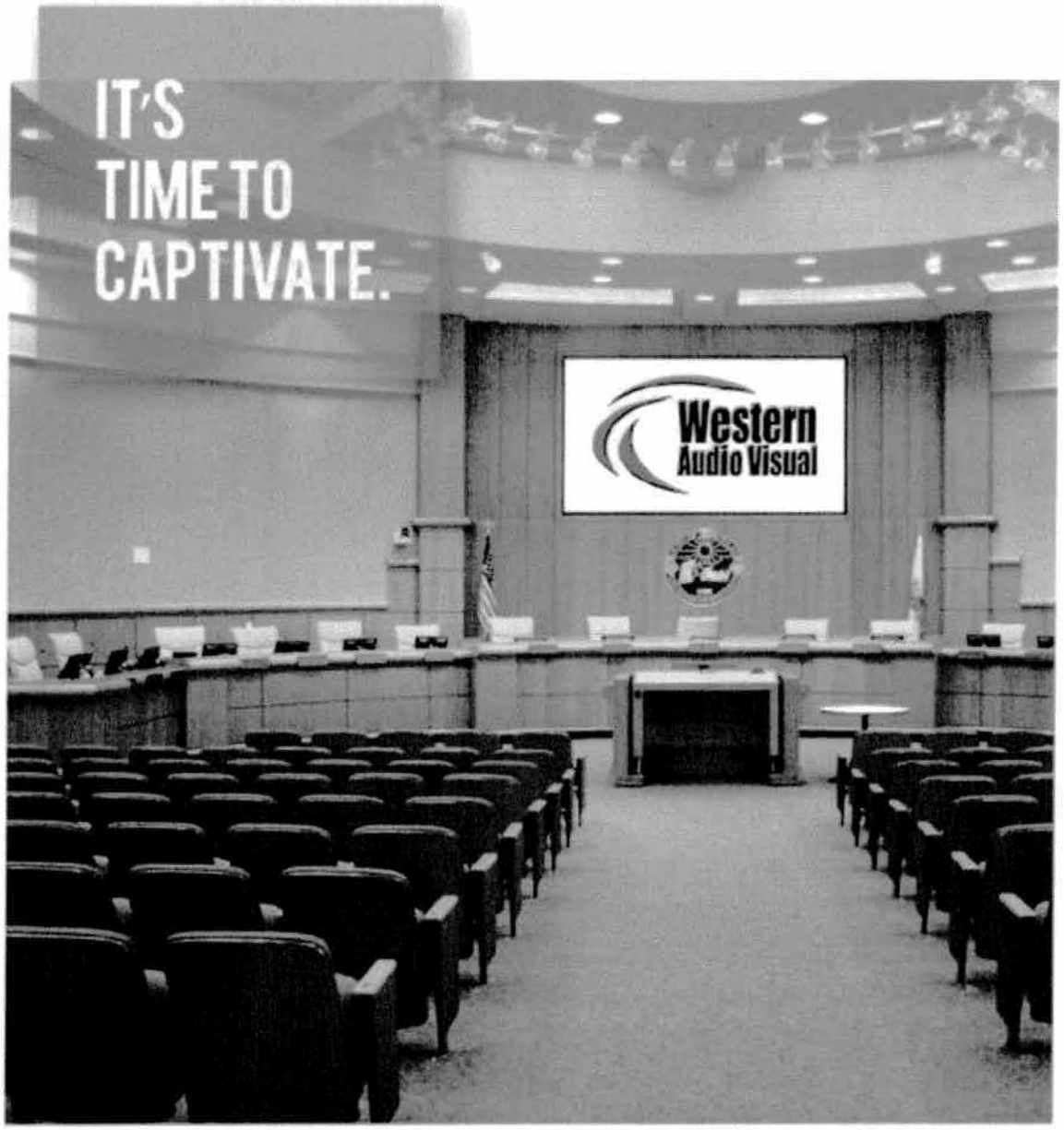

AUDIO/VISUAL SYSTEMS UPGRADE AT RFOTC
IFB: RO2155

ATTN: Rothchild Ong
Orange County Fire Authority
Purchasing Department
1 Fire Authority Road, Building C
Irvine, CA 92602

DUE DATE: September 14, 2016

COPY 2

SECTION IV: BID DOCUMENTS

BIDDER'S CHECKLIST

SUBMIT THIS BIDDER'S CHECKLIST WITH YOUR BID DOCUMENTS. Bidders shall complete and submit all required bid documents marked with an "X" in the "REQUIRED" column for bids to be considered responsive.

Attendance at the pre-bid meeting and job walk is a requirement for submitting a bid.

REQUIRED BID DOCUMENTS

[X] **BIDDER'S CHECKLIST**
[X] **BID FORM**
[X] **BID BOND (DEPOSIT)** in the form of:
[ ] Certified Check [ ] Cashier's Check [X] Bidder's Bond
[X] **BID PRICING PAGE (ATTACHMENT B) AND SCHEDULE**
[X] **DETAILED LABOR AND FEE BREAKDOWN (ATTACHMENT C)**
[X] **BIDDERS INFORMATION**
[X] **LIST OF PAST PROJECTS**
[X] **LIST OF CURRENT PROJECTS**
[X] **CONTRACTOR'S LICENSING STATEMENT**
[X] **LIST OF SUBCONTRACTORS**
[X] **DESIGNATOR OF SURETIES**
[X] **NON-COLLUSION AFFIDAVIT**
[X] **CERTIFICATION OF NON-DISCRIMINATION BY CONTRACTORS**
[X] **DEBARMENT AND SUSPENSION CERTIFICATION**
[X] **CERTIFICATION OF SITE EXAMINATION**
[X] **PARTY AND PARTICIPANT DISCLOSURE FORMS (IF APPLICABLE)**

POST- BID (CONTRACT) DOCUMENTS

Successful bidder shall submit the following:

[X] **INSURANCE REQUIREMENTS CERTIFICATE**
[X] **PREVAILING WAGE CERTIFICATION**
[X] **WORKERS COMPENSATION INSURANCE CERTIFICATION**
[X] **PERFORMANCE BOND**
[X] **PAYMENT (LABOR AND MATERIALS) BOND**
[X] **CONTRACTOR SERVICES AGREEMENT**

SUBMITTED BY:

Name of Company Western A/V Contact Name Hailey Schellin
Address 1592 N. Batavia St, Suite 2 City Orange State CA Zip 92867

1. BID FORM

To: **The Orange County Fire Authority (OCFA)**

From: Western A/V
(Legal Name of Bidder)

Project: *RO2155 – Audio/Visual Systems Upgrade at RFOTC*

The undersigned declares that the bid documents including, without limitation, the Invitation for Bids and the Instructions to Bidders have been read and agrees and proposes to furnish all necessary labor, materials, equipment and services to perform and furnish all work in accordance with the terms and conditions of the bid documents, including, without limitation, the Drawings and Specifications, and contract documents as provided in Bid RO2155 – Audio/Visual Systems Upgrade at RFOTC. The bidder will accept in full payment for that work the following total lump sum amount, all taxes and markup included: (transferred from the Bid Pricing Page)

Audio Visual Systems Upgrades at RFOTC	Amount
1) Upgrade of Audio/Visual Systems in Boardroom	$238,490.24
2) Upgrade of Audio/Visual Systems in Breakout Room AE117	$57,520.56
3) Upgrade of Audio/Visual Systems in Classrooms 153 and 154	$110,158.97
4) Upgrade of Audio/Visual Systems in Classrooms D106, D107	$106,126.74
Total Base Bid for Audio/Visual Systems Upgrades at RFOTC: (Must match Total Base Bid Amount provided below)	$512,296.52

Bid Base Lump Sum

Amount Written Five Hundred Twelve thousand, Two Hundred Ninety-Six Dollars & Fifty-two cents ~~Dollars~~

Contractor is required to provide itemized pricing in the schedule of values based on Construction Specifications Institute (CSI)'s Master Format. All costs are to be included in this form.

SCHEDULE OF VALUES (See Attachment B) – Please note that there are four (4) worksheets provided in Attachment B. All worksheets must be completed. Failure to complete all worksheets may result in your bid being marked as non-responsive.

DETAILED LABOR AND FEE BREAKDOWN (See Attachment C) - Please make sure that the Total Project Fee amounts and activities correspond to the correct activities as listed in the labor column of the Schedule of Values (Attachment B).

Total Base Bid for Audio/Visual Systems Upgrade (Must match Total Base Bid Amount provided on page 16)	$512,296.52

PROPOSED SCHEDULE OF CONSTRUCTION

Task	Weeks
Upgrade of Audio Visual Systems in Boardroom	7 days
Upgrade of Audio Visual Systems in Breakout Room AE117	3.5 days
Upgrade of Audio Visual Systems in Classrooms 153 and 154	7 days
Upgrade of Audio Visual Systems in Classrooms D106, D107	7 days
Total weeks for completion	24.5 days

1. The undersigned has reviewed the work outlined in the bid documents and fully understands the scope of work required in this bid, understands the construction and project management function(s) as described in the bid documents, and that each bidder who is awarded a contract shall be in fact the prime contractor, not a subcontractor, to the OCFA, and agrees that its bid, if accepted by the OCFA, will be the basis for the bidder to enter into a contract with the OCFA in accordance with the intent of the bid documents.

2. The undersigned had notified the OCFA in writing any discrepancies or omission or of any doubt, questions, or ambiguities about the meaning of any of the bid documents at least seventy-two (72) hours prior to bid opening, and has contacted the OCFA Assistant Purchasing Agent before bid date to verify the issuance of any clarifying addenda.

3. The undersigned agrees to commence work under this Contract on the date established in the bid documents and to complete all work within the time specified in the Bid Documents.

4. **By submitting this Bid Form and signing below, the liquidated damages clause of the Agreement is hereby acknowledged.**

5. It is understood that the OCFA reserves the right to reject this bid and that the bid shall remain open to acceptance and is irrevocable for a period of sixty (60) days.

6. Bidder acknowledges receipt and acceptance of the following addenda, if any:

No. 1 Dated 8/25/16 No. 2 Dated 9/8/16

No. _____ Dated _____ No. _____ Dated _____

7. The undersigned hereby certifies that bidder is able to furnish labor that can work in harmony with all other elements of labor employed or to be employed on the work.

8. The bidder represents that it is competent, knowledgeable, and has special skills with respect to the nature, extent, and inherent conditions of the work to be performed. Bidder further acknowledges that there are certain peculiar and inherent conditions existent in the construction of the work that may create, during the work, unusual or peculiar unsafe conditions hazardous to persons and property.

9. Bidder expressly acknowledges that it is aware of such peculiar risks and that it has the skill and experience to foresee and to adopt protective measures to adequately and safely perform the work with respect to such hazards.

10. Bidder expressly acknowledges that it is aware that if a false claim is knowingly submitted (as the terms "claim" and "knowingly" are defined in the California False Claims Act, Cal. Gov. Code,§12650 et seq.), the OCFA will be entitled to civil remedies set forth in the California False Claim Act. It may also be considered fraud and the bidder may be subject to criminal prosecution.

11. The undersigned bidder certifies that it is, and shall be throughout the period of the contract, licensed by the State of California to do the type of work required under the terms of the Bid Documents. Bidder further certifies that it is regularly engaged in the general class and type of work called for in the Bid Documents.

12. Bidder agrees and acknowledges that it is aware of the provisions of Section 3700 of the California Labor Code which requires every employer to be insured against liability for workers' compensation or to undertake self-insurance in accordance with the provisions of that code, and the bidder will comply with such provisions before commencing the performance of this contract.

Furthermore, Bidder hereby certifies to the OCFA that all representations, certifications, and statements made by the bidder, as set forth in this bid form, are true and correct and are made under penalty of perjury.

Dated this 13 day of September 2016

Legal Name of Bidder Western A/V

Type of Entity (Corp., LLC) S Corp.

Signature of Bidder Hailey M. Schell

Title of Signer Sales Representative

If Bidder is a Corporation, affix corporate seal

Name of Corporation Western A/V

Date of Incorporation May 2005

President Catherine Schellin Secretary Steve Hollingsworth

Treasurer Jay Schellin Manager _____

Bond No. CSBA-3083

BIDDER'S BOND
(10% of the Total Bid Amount)

KNOW ALL PERSONS BY THESE PRESENTS:

That the undersigned, as Western A/V, A Corporation, as Principal ("Principal"),

and SureTec Insurance Company as Surety ("Surety"),

a corporation organized and existing under and by virtue of the laws of the State of *Texas and authorized to do business as a surety in the State of California, are held and bound unto the Orange County Fire Authority ("Authority") of Orange County, State of California as Obligee, in the sum of

Ten Percent of the Amount Bid Dollars ($) 10% of the Amount Bid

lawful money of the United States of America, for the payment of which sum well and truly to be made, we, and each of us, bind ourselves, our heirs, executors, administrators, successors, and assigns, jointly and severally, firmly by these presents.

THE CONDITION OF THIS OBLIGATION IS SUCH that whereas the Principal has submitted a bid to the Authority for all work specifically described in the accompanying bid;

NOW, THEREFORE, if the Principal is awarded the Project and, within the time and manner required under the Bid Documents, after the prescribed forms are presented to Principal for signature, enters into a written contract ("Agreement"), in the prescribed form in accordance with the bid, and files two bonds, one guaranteeing faithful performance and the other guaranteeing payment for labor and materials as required by law, and meets all other conditions to the contract between the Principal and the Obligee becoming effective, or if the Principal shall fully reimburse and save harmless the Obligee from any damage sustained by the Obligee through failure of the Principal to enter into the Agreement and to file the required performance and labor and material bonds, and to meet all other conditions to the Agreement between the Principal and the Obligee becoming effective, then this obligation shall be null and void; otherwise, it shall be and remain in full force and effect. The full payment of the sum stated above shall be due immediately if Principal fails to execute the Agreement within seven (7) days of the date of the Authority's Notice of Award to Principal.

Surety, for value received, hereby stipulates and agrees that no change, extension of time, alteration or addition to the terms of the Agreement or the call for bids, or to the work to be performed thereunder, or the specifications accompanying the same, shall in any way affect its obligation under this bond, and it does hereby waive notice of any such change, extension of time, alteration or addition to the terms of the Agreement or the call for bids, or to the work, or to the specifications.

In the event suit is brought upon this bond by the Obligee and judgment is recovered, the Surety shall pay all costs incurred by the Obligee in such suit, including a reasonable attorneys' fee to be fixed by the Court.

If the Authority awards the bid, the security of unsuccessful bidder(s) shall be returned within sixty (60) days from the time the award is made. Unless otherwise required by law, no bidder may withdraw its bid for ninety (90) days after the date of the bid opening.

IN WITNESS WHEREOF, this instrument has been duly executed by the Principal and Surety above named, on the 13th day of September, 2016.

(Affix Corporate Seal)

Western A/V, A Corporation

Principal

By

Jay Schelin - CFO

Print Name and Title of Signatory

(Affix Corporate Seal)

SureTec Insurance Company

Surety

By Shaunna Burchfiel, Attorney-in-Fact

Commercial Surety Bond Agency

Name of California Agent of Surety

1411 N. Batavia Street, Suite 201, Orange, CA 92867

Address of California Agent of Surety

(714) 516-1232

Telephone Number of California Agent of Surety

Bidder must attach Power of Attorney and Certificate of Authority for Surety and a Notarial Acknowledgment for all Surety's signatures. The California Department of Insurance must authorize the Surety to be an admitted Surety Insurer.

ACKNOWLEDGMENT

A notary public or other officer completing this certificate verifies only the identity of the individual who signed the document to which this certificate is attached, and not the truthfulness, accuracy, or validity of that document.

State of California
County of Orange)

On September 13, 2016 before me, Karen L. Ritto, Notary Public
(insert name and title of the officer)

personally appeared Jay Schellin,
who proved to me on the basis of satisfactory evidence to be the person(~~s~~) whose name(~~s~~) is/~~are~~ subscribed to the within instrument and acknowledged to me that he/~~she/they~~ executed the same in his/~~her/their~~ authorized capacity(~~ies~~), and that by his/~~her/their~~ signature(~~s~~) on the instrument the person(~~s~~), or the entity upon behalf of which the person(~~s~~) acted, executed the instrument.

I certify under PENALTY OF PERJURY under the laws of the State of California that the foregoing paragraph is true and correct.

WITNESS my hand and official seal.

KAREN L. RITTO
COMM. #2138527
Notary Public-California
ORANGE COUNTY
My Comm. Expires Dec 30, 2019

Signature _____ **(Seal)**
Karen L. Ritto

CALIFORNIA ALL-PURPOSE ACKNOWLEDGMENT

A notary public or other officer completing this certificate verifies only the identity of the individual who signed the document to which this certificate is attached, and not the truthfulness, accuracy, or validity of that document.

STATE OF CALIFORNIA }

County of Orange

On September 13th, 2016 (Date) before me, Karen L. Ritto (Insert Name of Notary exactly as it appears on the official seal), Notary Public,

personally appeared Shaunna Burchfiel (Name(s) of Signer(s)),

who proved to me on the basis of satisfactory evidence to be the person(s) whose name(s) is/are subscribed to the within instrument and acknowledged to me that he/she/they executed the same in his/her/their authorized capacity(ies), and that by his/her/their signature(s) on the instrument the person(s), or the entity upon behalf of which the person(s) acted, executed the instrument.

I certify under PENALTY OF PERJURY under the laws of the State of California that the foregoing paragraph is true and correct.

Witness my hand and official seal.

Signature _____ Signature of Notary Public Karen L. Ritto

KAREN L. RITTO
COMM. #2136527
Notary Public-California
ORANGE COUNTY
My Comm. Expires Dec 30, 2019
FRS3

Place Notary Seal Above

OPTIONAL

Though the information below is not required by law, it may prove valuable to persons relying on the document and could prevent fraudulent removal and reattachment of the form to another document.

Description of Attached Document

Title or Type of Document: Bidder's Bond

Document Date: 09/13/2016 Number of Pages: Two

Signer(s) Other Than Named Above: _____

Capacity(ies) Claimed by Signer(s)

Signer's Name: Shaunna Burchfiel

- ☐ Individual
- ☐ Corporate Officer — Title(s): _____
- ☐ Partner ☐ Limited ☐ General
- ☑ Attorney in Fact
- ☐ Trustee
- ☐ Guardian or Conservator
- ☐ Other: _____

Signer is Representing: _____

RIGHT THUMBPRINT OF SIGNER
Top of thumb here

Signer's Name: _____

- ☐ Individual
- ☐ Corporate Officer — Title(s): _____
- ☐ Partner ☐ Limited ☐ General
- ☐ Attorney in Fact
- ☐ Trustee
- ☐ Guardian or Conservator
- ☐ Other: _____

Signer is Representing: _____

RIGHT THUMBPRINT OF SIGNER
Top of thumb here

Bond No. CSBA-3083

POA #: 510023

SureTec Insurance Company

LIMITED POWER OF ATTORNEY

Know All Men by These Presents, That SURETEC INSURANCE COMPANY (the "Company"), a corporation duly organized and existing under the laws of the State of Texas, and having its principal office in Houston, Harris County, Texas, does by these presents make, constitute and appoint

Arturo Ayala, Daniel Huckabay, Dwight Reilly, Andrew Waterbury, Shaunna Burchfiel, Michael Castaneda

its true and lawful Attorney-in-fact, with full power and authority hereby conferred in its name, place and stead, to execute, acknowledge and deliver any and all bonds, recognizances, undertakings or other instruments or contracts of suretyship to include waivers to the conditions of contracts and consents of surety for:

Fifteen Million and 00/100 Dollars ($15,000,000.00)

and to bind the Company thereby as fully and to the same extent as if such bond were signed by the President, sealed with the corporate seal of the Company and duly attested by its Secretary, hereby ratifying and confirming all that the said Attorney-in-Fact may do in the premises. Said appointment shall continue in force until 5/18/2017 and is made under and by authority of the following resolutions of the Board of Directors of the SureTec Insurance Company:

Be it Resolved, that the President, any Vice-President, any Assistant Vice-President, any Secretary or any Assistant Secretary shall be and is hereby vested with full power and authority to appoint any one or more suitable persons as Attorney(s)-in-Fact to represent and act for and on behalf of the Company subject to the following provisions:

Attorney-in-Fact may be given full power and authority for and in the name of and of behalf of the Company, to execute, acknowledge and deliver, any and all bonds, recognizances, contracts, agreements or indemnity and other conditional or obligatory undertakings and any and all notices and documents canceling or terminating the Company's liability thereunder, and any such instruments so executed by any such Attorney-in-Fact shall be binding upon the Company as if signed by the President and sealed and effected by the Corporate Secretary.

Be it Resolved, that the signature of any authorized officer and seal of the Company heretofore or hereafter affixed to any power of attorney or any certificate relating thereto by facsimile, and any power of attorney or certificate bearing facsimile signature or facsimile seal shall be valid and binding upon the Company with respect to any bond or undertaking to which it is attached. *(Adopted at a meeting held on 20th of April, 1999.)*

In Witness Whereof, SURETEC INSURANCE COMPANY has caused these presents to be signed by its President, and its corporate seal to be hereto affixed this 8th day of March, A.D. 2016

SURETEC INSURANCE COMPANY

By: _____

John Knox Jr., President

State of Texas ss:
County of Harris

On this 8th day of March, A.D. 2016 before me personally came John Knox Jr., to me known, who, being by me duly sworn, did depose and say, that he resides in Houston, Texas, that he is President of SURETEC INSURANCE COMPANY, the company described in and which executed the above instrument; that he knows the seal of said Company; that the seal affixed to said instrument is such corporate seal; that it was so affixed by order of the Board of Directors of said Company; and that he signed his name thereto by like order.

JACQUELYN MALDONADO
Notary Public
State of Texas
My Comm. Exp. 5/18/2017

Jacquelyn Maldonado, Notary Public
My commission expires May 18, 2017

I, M. Brent Beaty, Assistant Secretary of SURETEC INSURANCE COMPANY, do hereby certify that the above and foregoing is a true and correct copy of a Power of Attorney, executed by said Company, which is still in full force and effect; and furthermore, the resolutions of the Board of Directors, set out in the Power of Attorney are in full force and effect.

Given under my hand and the seal of said Company at Houston, Texas this 13th day of September, 2016, A.D.

M. Brent Beaty, Assistant Secretary

Any instrument issued in excess of the penalty stated above is totally void and without any validity.
For verification of the authority of this power you may call (713) 812-0800 any business day between 8:00 am and 5:00 pm CST.

STATE OF CALIFORNIA

DEPARTMENT OF INSURANCE № 08138

SAN FRANCISCO

Certificate of Authority

THIS IS TO CERTIFY *THAT, Pursuant to the Insurance Code of the State of California,*

SureTec Insurance Company

of Texas *, organized under the laws of* Texas *, subject to its Articles of Incorporation or other fundamental organizational documents, is hereby authorized to transact within the State, subject to all provisions of this Certificate, the following classes of insurance:*

Surety

as such classes are now or may hereafter be defined in the Insurance Laws of the State of California.

THIS CERTIFICATE *is expressly conditioned upon the holder hereof now and hereafter being in full compliance with all, and not in violation of any, of the applicable laws and lawful requirements made under authority of the laws of the State of California as long as such laws or requirements are in effect and applicable, and as such laws and requirements now are, or may hereafter be changed or amended.*

IN WITNESS WHEREOF, *effective as of the* 24th *day of* October, 2005, *I have hereunto set my hand and caused my official seal to be affixed this* 24th *day of* October, 2005.

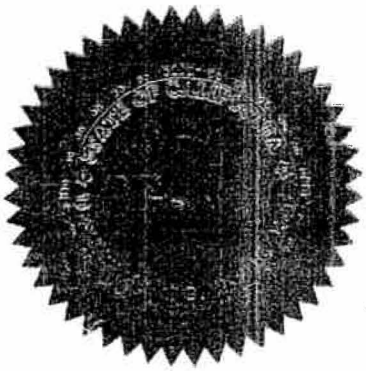

John Garamendi
Insurance Commissioner

By Patricia K. Staggs

Patricia K. Staggs
for Richard D. Baum
Chief Deputy

NOTICE:
Qualification with the Secretary of State must be accomplished as required by the California Corporations Code promptly after issuance of this Certificate of Authority. Failure to do so will be a violation of Insurance Code Section 701 and will be grounds for revoking this Certificate of Authority pursuant to the convenants made in the application therefor and the conditions contained herein.

FORM CP-3

OSP 00 39391

Western Audio Visual

Project Pricing Summary

PROJECT NAME: Orange County Fire Authority

DATE: 9/12/2016

ROOM	EQUIPMENT	ENGINEERING, DRAFTING & DSP	PROGRAMMING	PROJECT MANAGEMENT	ASSEMBLY AND STAGING	AV INSTALL	TRAINING	PREVENTATIVE MAINTENANCE (1 YEAR)	G&A	ELECTRONIC WASTE RECYCLING FEE	SHIPPING AND HANDLING	BOND	PRE-TAX TOTAL	TAX	TOTAL
Boardroom AE107	$ 171,449.00	$ 6,258.00	$ 14,450.00	$ 960.00	$ 384.00	$ 23,616.00	$ 1,536.00	$ 2,304.00	$ 1,885.94	$ 100.00	$ 1,695.73		$ 224,638.67	$ 13,851.58	$ 238,490.24
Breakout Room Classroom AE117	$ 38,435.00	$ 2,384.00	$ 4,624.00	$ 576.00	$ 192.00	$ 6,048.00	$ 576.00	$ 768.00	$ 422.79	$ 10.00	$ 379.61		$ 54,415.39	$ 3,105.17	$ 57,520.56
Classrooms 153, 154	$ 80,192.00	$ 2,980.00	$ 2,312.00	$ 768.00	$ 384.00	$ 13,248.00	$ 576.00	$ 1,536.00	$ 882.11	$ 10.00	$ 792.13		$ 103,680.24	$ 6,478.73	$ 110,158.97
Classrooms D106, D107	$ 76,532.00	$ 2,980.00	$ 2,312.00	$ 768.00	$ 384.00	$ 13,248.00	$ 576.00	$ 1,536.00	$ 841.85	$ 10.00	$ 755.86		$ 99,943.71	$ 6,183.03	$ 106,126.74
Total	$ 366,608.00	$ 14,602.00	$ 23,698.00	$ 3,072.00	$ 1,344.00	$ 56,160.00	$ 3,264.00	$ 6,144.00	$ 4,032.69	$ 130.00	$ 3,623.32	$ 8,720.00	$ 482,678.01	$ 29,618.51	$ 512,296.52

Orange County Fire Authority

Western Audio Visual

Submitted by: Western Audio Visual

Date: 9/12/2016
Revision: A

Label	Qty	Manuf	Model	Description	Unit Price	Ext Price
				Boardroom AE107		
	2	Crestron	TSW-1050-B-S	10.1" Touch Screen, Black Smooth	1,039.00	2,078.00
	2	Crestron	TSW-1050-TTK-B-S	Tabletop Kit for TSW-1050 & TSW-1052, Black Smooth	109.00	218.00
	1	Crestron	TS-1542-TILT-B-S	15.6" HD Touch Screen, Tabletop Tilt, Black Smooth	2,078.00	2,078.00
	1	Crestron	PRO3	3-Series Control System®	2,295.00	2,295.00
	1	Crestron	DM-MD32x32	32x32 DigitalMedia™ Switcher	7,446.00	7,446.00
	7	Crestron	DMC-4K-HD-HDCP2	4K HDMI® Input Card	347.00	2,429.00
	8	Crestron	DMC-4K-C-HDCP2	HDBaseT® Certified 4K DigitalMedia 8G+® Input Card	563.00	4,504.00
	5	Crestron	DM-TX-200-C-2G-W-T	Wall Plate DigitalMedia 8G+® Transmitter 200, White Textured	607.00	3,035.00
	1	Crestron	DM-TX-4K-302-C	4K DigitalMedia 8G+® Transmitter 302	866.00	866.00
	2	Crestron	DM-TX-4K-100-C-1G-W-T	Wall Plate 4K DigitalMedia 8G+® Transmitter 100, White Textured	304.00	608.00
	9	Crestron	DM-RMC-4K-SCALER-C	4K DigitalMedia 8G+® Receiver & Room Controller w/Scaler	780.00	7,020.00
	2	Crestron	DMC-HDO	2-Channel HDMI® Output Card	304.00	608.00
	5	Crestron	DMC-4K-CO-HD-HDCP2	2-Channel HDBaseT® Certified 4K DigitalMedia 8G+® Output Card	563.00	2,815.00
	3	Crestron	HD-DA8-4K-E	1-to-8 4K HDMI® Distribution Amplifier	433.00	1,299.00
	1	Crestron	DM-PSU-8	8-Port PoDM Power Supply for DM 8G+® I/O Cards	520.00	520.00
SMP1-1	1	Epiphan	Pearl Rackmount	Streaming Encoder & Recorder	5,370.00	5,370.00
NETSW1-1	1	Cisco	Catalyst 2960X-24 PD-L	24-Port Gigabit Ethernet Switch with POE	2,438.00	2,438.00
SCN1-1	1	Draper	ACCESS V NC	ACCESS/V SCREEN (NO CASE) 136 3/4" DIAGONAL CUSTOM 16:10 *XT1000VB MATT WHITE BLACK BACKED **VIEWING AREA:72 1/2H X 116W** TOTAL TOP DROP = 4" BLACK **REQUIRED MINIMUM STEEL CASE CONSTRUCTION CASE LENGTH = 143" 115 VAC MOTOR *HOOK UP LEFT (Dias Side)	2,033.00	2,033.00
SCN1-2	1	Draper	PREMIER ELECTRIC SCREEN	94 1/4" DIAGONAL CUSTOM 16:10 *XT1000VB MATT WHITE BLACK BACKED VIEWING AREA: 50H X 80W TOTAL TOP DROP = 30" BLACK *SMALL WHITE CASE 97 7/8" OVERALL LENGTH 115 VAC MOTOR *HOOK UP LEFT 94 1/4" DIAGONAL CUSTOM 16:10 *XT1000VB MATT WHITE BLACK BACKED, **VIEWING AREA:50H X 80W** TOTAL TOP DROP = 30" BLACK ***SMALL WHITE CASE** 97 7/8" OVERALL LENGTH 115 VAC MOTOR *HOOK UP LEFT (Audience side)	1,465.00	1,465.00
PROJ1-1 & PROJ1-2	2	Panasonic	PT-EZ770ZU	6500 ANSI Lumen, 3 LCD, 1920x1200 Res. (16:10), w/digital link	4,145.00	8,290.00
PROJACC1-1	2	Panasonic	ET-LAE300	Spare projector lamp	569.00	1,138.00
PROJACC1-2	2	Panasonic	ET-RFE300	Spare projector filter	90.00	180.00
PMNT1-1 & PMNT1-2	2	Chief	RPMA302	RPA Elite Universal & Custom Ceiling Projector Mounts with Keyed Locking	156.00	312.00
DISP1-1 TO DISP1-17	17	Dell	P2016	20" LED monitor with adjustable height stand (16:10, 1280x800) (Dias, 2 AV booth)	159.00	2,703.00
DISP2-1 TO DISP2-2	2	Samsung	DM65E	65" LED Pro display, (16:9, 1920 x 1080)	2,289.00	4,578.00
WMNT1-1 TO WMNT1-2	2	Chief	RLF2	Wall mount, ultra slim (65" signage display)	67.00	134.00
DMNT1-1	1	Chief	KCS320B	Single Arm Desk Mount, Triple Monitor (AV Tech Booth)	226.00	226.00
BD1-1	1	Denon Pro	DN-500bd	Blue-Ray DVD player	443.00	443.00
CATVRX1-1 to CATV1-3	3	Contemporary Research	232-ATSC 4	Off Air HDTV tuner, RS232 & IR control	777.00	2,331.00
SCLBRDG1-1	1	Vaddio	999-8210-000	AV Bridge	1,496.00	1,496.00
WCLB1-1	1	Barco	CSE-200	Clickshare Wireless Presentation Gateway	1,470.00	1,470.00
CAM1-1 to CAM1-4	4	Vaddio	RoboSHOT 30 HD-SDI (white)	Professional Class, HD PTZ Camera with PoE+ Midspan Power Injector	3,108.00	12,432.00
CAMCNTL1-1	1	Vaddio	ProductionVIEW HD-SDI MV	Camera controller, switcher (HD-SDI)	6,494.00	6,494.00

Orange County Fire Authority

Western Audio Visual

Submitted by: Western Audio Visual

Date: 9/12/2016
Revision: A

Label	Qty	Manuf	Model	Description	Unit Price	Ext Price
TDISP3-1	1	Vaddio	Teletouch 22"	22" LCD touch display for camera ProductionVIEW HDMI	1,194.00	1,194.00
CCLGMNT1-1 & CCLGMNT1-2	2	Vaddio	Ceiling mount	Suspended Ceiling Mount for Vaddio™ Cameras	67.00	134.00
POE3-1	2	Biamp	PH POE36U-1AT-R	AVB PoE Injector	80.00	160.00
DSP3-1	1	Biamp	TesiraForte AVB TI	Digital Signal Processor, POTs line input	2,219.00	2,219.00
DSP4-1	1	Biamp	TesiraForte AVB VI	Digital Signal Processor, VoIP input	2,219.00	2,219.00
AINCRD1-1 TO AINCRD1-9	9	Biamp	Tesira SEC-4	Audio Input Card (4 channels)	407.00	3,663.00
DSP5-1	1	Biamp	Tesira Server-IO AVB	Tesira Server-IO AVB, with AVB-1 network card, 1 DSP-2 card	4,080.00	4,080.00
AVBSW1-1	1	MOTU	MOTU 9305	Five-Port AVB Ethernet Switch	328.00	328.00
AREC1-1 TO AREC1-2	2	Denon Pro	DN-700R	Digital Audio Recorder	665.00	1,330.00
PCU1-1 TO PCU1-3	3	Shure	DC 6190 P	Portable Conference Unit, Base unit, Chairman stations (1 spare stations)	491.00	1,473.00
MIC1-1 TO MIC1-42	42	Shure	GM 6525	Gooseneck Microphone, 63 cm long, black w/XLR plug and light ring for all DM, CM, DC, FD, FC, FM and IS	173.00	7,266.00
PCU2-1 TO PCU2-42	42	Shure	DC 6190 P	Portable Conference Unit, delegate stations (2 spare stations)	491.00	20,622.00
DCSCCU1-1	1	Shure	DIS-CCU-US	Central Control Unit, fully digital (For DSS590 and DCS 6000 (power supply included)	1,266.00	1,266.00
CUL1-1	1	Shure	FL 6000	CU 6011, CU 6105, CU 6110 Feature License	1,002.00	1,002.00
DCSEXT1-1	1	Shure	EX 6010	DCS LAN Extension Unit: Includes 4 Repeated outputs with 125W power each	2,502.00	2,502.00
	1	Shure	SW 6000	Conference Management Software	1,412.00	1,412.00
	2	Shure	SW 6018	Mimic/Synoptic	626.00	1,252.00
	1	Shure	SW 6110 50	Advanced Microphone Control	1,287.00	1,287.00
	36	Shure	EC 6001-02	Cable, 2 m, Black, STP Cat. 5e incl. connectors (RJ45) for DDS 5900 & DCS 6000	14.00	504.00
	5	Shure	EC 6001-30	Cable, 30 m, Black, STP Cat. 5e incl. connectors (RJ45) for DDS 5900 & DCS 6000	64.00	320.00
	10	Shure	DH 6001 H	Lightweight Headphones, 600 Ohms	16.00	160.00
WMIC2-1	1	Shure	QLXD24/B58	Wireless Microphone System with hand held Mic	937.00	937.00
WMIC1-2	1	Shure	QLXD14/83	Wireless Microphone System with belt-pack & lapel Mic	935.00	935.00
RFSPLT1-1	2	Shure	UA221 RF	RF splitter/combiner	113.00	226.00
PLT1-1 TO PLT1-2	2	RCI or Panel Crafters	W92008-WQ487954	Audio output plate with single XLR-F, white with black engraving, 1G (custom text "Press Feed - Line Level")	34.00	68.00
MIC2-1	1	Shure	MX415/C	15" Goose neck microphone with shock mount base, instlled into podium	231.00	231.00
SPKR1-1	1	Fostex	RM-3	Rackmount 20W Speaker System	554.00	554.00
MIC3-1	1	Shure	522	Voice Communication Microphone (AV control booth)	134.00	134.00
IRRX1-1	2	Sennheiser	EKI830	IR receiver	173.00	346.00
INLP1-1	2	Sennheiser	EZT3011	induction loops	56.00	112.00
ALSTX1-1	1	Sennheiser	SZI1015-W	Emitter panel for single, dual or multi channel use (replacement for missing unit)	833.00	833.00
ELVT1-1	1	ElectroVote		ELECTroVOTE 32-station roll call voting system, 1 clerks control module and 32 handheld voting modules	8,985.00	8,985.00
VTPNL1-1 TO VTPNL1-2	2	ElectroVote		16 position Large Display Panels	3,851.00	7,702.00
MMUT1-1	1	RDL	D-ERC1	Audio remote control decora panel, to be wired for microphone Mute function	79.00	79.00
MBX1-1	1	Extron	SMB100	1 gang surface mount box	167.00	167.00
PWR2-1 TO PWR2-1	2	Furman	PL-8 Pro C	Power Distribution/Surge, 9 outlet, 20 Amp	300.00	600.00
WKBMS1-1 TO WKBMS1-2	2	Wireless Computing	RF-412	RF Wireless keyboard & optical mouse, 50' range minimum (for OFE PCs)	200.00	400.00
DRW1-1	1	Middle Atlantic	UD2	2RU utility drawer	95.00	95.00
ACPNL1-1 to ACPNL1-6	6	Primacoustic	P102-2448-09	24" x 48" Accoustic panel 2" - square (ceiling cloud)	62.00	372.00
ANCHR1-1 TO ANCHR1-6	2	Primacoustic	F101-1009-00	Snap-on Anchors Anchor (50pcs)	114.00	228.00
	1	WAV	LOT	Miscellaneous Materials, Cabling & Connectors	2,700.00	2,700.00
				System 1 Equipment Sub-Total:		**171,449.00**

Orange County Fire Authority

Western Audio Visual

Submitted by: Western Audio Visual

Date: 9/12/2016
Revision: A

Label	Qty	Manuf	Model	Description	Unit Price	Ext Price
				Breakout Room Classroom AE117		
	1	Crestron	TS-1542-TILT-C-B-S	15.6" HD Touch Screen w/DM 8G+® input, Tabletop Tilt, Black Smooth	2,511.00	2,511.00
	1	Crestron	CP3	3-Series Control System®	780.00	780.00
	1	Crestron	DM-MD8X8	8x8 DigitalMedia™ Switcher	1,862.00	1,862.00
	4	Crestron	DMC-4K-HD-HDCP2	4K HDMI® Input Card	347.00	1,388.00
	3	Crestron	DMC-4K-C-HDCP2	HDBaseT® Certified 4K DigitalMedia 8G+® Input Card	563.00	1,689.00
	2	Crestron	DM-TX-200-C-2G-W-T	Wall Plate DigitalMedia 8G+® Transmitter 200, White Textured	607.00	1,214.00
	1	Crestron	DM-RMC-4K-SCALER-C	4K DigitalMedia 8G+® Receiver & Room Controller w/Scaler	780.00	780.00
	1	Crestron	DMC-HDO	2-Channel HDMI® Output Card	304.00	304.00
	1	Crestron	DMC-4K-CO-HD-HDCP2	2-Channel HDBaseT® Certified 4K DigitalMedia 8G+® Output Card	563.00	563.00
	1	Crestron	HD-MD4X1-4K-E	4x1 4K HDMI® Switcher	304.00	304.00
	1	Crestron	DM-PSU-8	8-Port PoDM Power Supply for DM 8G+® I/O Cards	520.00	520.00
	1	Crestron	DM-TXRX-100-STR	HD Streaming Transmitter/Receiver	866.00	866.00
SMP1-1	1	Epiphan	Pearl Rackmount	Streaming Encoder & Recorder	5,370.00	5,370.00
NETSW2-1	1	Cisco	SG300-20	20-Port Gigabit Ethernet Switch	347.00	347.00
BD1-1	1	Denon Pro	DN-500bd	Blue-Ray DVD player	443.00	443.00
PROJ2-1	1	Panasonic	PT-EZ590U	5400 ANSI Lumen, 19200x1200 (16:10), 3 LCD	3,795.00	3,795.00
PROJACC2-1	1	Panasonic	ET-LAEF100	Spare projecotr lamp	342.00	342.00
PROJACC2-2	1	Panasonic	ET-RFE300	Spare projector filter	90.00	90.00
PMNT1-1	1	Chief	RPMA302	RPA Elite Universal & Custom Ceiling Projector Mounts with Keyed Locking	156.00	156.00
CATVRX1-1	1	Contemporary Research	232-ATSC 4	Off Air HDTV tuner, RS232 & IR control	777.00	777.00
WCLB1-1	1	Barco	CSE-200	Clickshare Wireless Presentation Gateway	1,470.00	1,470.00
CAM1-1	1	Vaddio	RoboSHOT 30 HD-SDI (white)	Professional Class, HD PTZ Camera with PoE+ Midspan Power Injector	3,108.00	3,108.00
CAM2-1	1	Vaddio	ClearSHOT 10 USB	HD quality PTZ camera, USB 3.0 connection, mount, 10' USB cable (USB extender required) IR control only	1,549.00	1,549.00
WMRX1-1	1	Shure	QLXD24/B58	Wireless Microphone System with hand held Mic	937.00	937.00
WMRX2-1	1	Shure	QLXD14/83	Wireless Microphone System with belt-pack & lapel Mic	935.00	935.00
DSP1-1	1	Biamp	TesiraForte AVB AI	Digital Signal Processor	1,664.00	1,664.00
CMIC1-1 TO CMIC1-4	4	Shure	MX202WP/C	Microflex, ceilinng mic, cardiod pick-up, pre-amp mounting plate, white	158.00	632.00
AVBSW1-1	1	MOTU	MOTU 9305	Five-Port AVB Ethernet Switch	328.00	328.00
DSP2-1	1	Biamp	Tesira EX-MOD	Remote Expander Breakout Module	1,048.00	1,048.00
AINCRD1-1 TO AINCRD1-2	2	Biamp	Tesira EIC-4	Audio Input Card (4 channels)	197.00	394.00
IRRX1-1 TO IRRX1-2	2	Sennheiser	EKI830	IR receiver	173.00	346.00
INLP1-1 TO INLP1-2	2	Sennheiser	EZT3011	induction loops	56.00	112.00
PWR2-1	1	Furman	PL-8 Pro C	Power Distribution/Surge, 9 outlet, 20 Amp	300.00	300.00
DRW1-1	1	Middle Atlantic	UD2	2RU utility drawer	95.00	95.00
	1	ICRON	Ranger 2201	Single port Cat 5e 100 meter extender	366.00	366.00
	1	WAV	LOT	Miscellaneous Materials, Cabling & Connectors	1,050.00	1,050.00
				System 2 Equipment Sub-Total:		**38,435.00**

Orange County Fire Authority

Western Audio Visual

Submitted by: Western Audio Visual

Date: 9/12/2016
Revision: A

Label	Qty	Manuf	Model	Description	Unit Price	Ext Price
				Classrooms 153, 154		
	2	Crestron	TS-1542-TILT-C-B-S	15.6" HD Touch Screen w/DM 8G+® Input, Tabletop Tilt, Black Smooth	2,511.00	5,022.00
	2	Crestron	CP3	3-Series Control System®	780.00	1,560.00
	2	Crestron	DM-MD8X8	8x8 DigitalMedia™ Switcher	1,862.00	3,724.00
	10	Crestron	DMC-4K-HD-HDCP2	4K HDMI® Input Card	347.00	3,470.00
	6	Crestron	DMC-4K-C-HDCP2	HDBaseT® Certified 4K DigitalMedia 8G+® Input Card	563.00	3,378.00
	4	Crestron	DM-TX-200-C-2G-W-T	Wall Plate DigitalMedia 8G+® Transmitter 200, White Textured	607.00	2,428.00
	4	Crestron	DM-RMC-4K-SCALER-C	4K DigitalMedia 8G+® Receiver & Room Controller w/Scaler	780.00	3,120.00
	2	Crestron	DMC-HDO	2-Channel HDMI® Output Card	304.00	608.00
	4	Crestron	DMC-4K-CO-HD-HDCP2	2-Channel HDBaseT® Certified 4K DigitalMedia 8G+® Output Card	563.00	2,252.00
	2	Crestron	HD-MD4X1-4K-E	4x1 4K HDMI® Switcher	304.00	608.00
	2	Crestron	DM-PSU-8	8-Port PoDM Power Supply for DM 8G+® I/O Cards	520.00	1,040.00
DECDR1-1 TO DECDR1-?	2	Crestron	DM-TXRX-100-STR	HD Streaming Transmitter/Receiver	866.00	1,732.00
SMP1-1 TO SMP1-2	2	Epiphan	Pearl Rackmount	Streaming Encoder & Recorder	5,370.00	10,740.00
WCLB1-1	2	Barco	CSE-200	Clickshare Wireless Presentation Gateway	1,470.00	2,940.00
NETSW2-1 TO NETSW2-?	2	Cisco	SG300-20	20-Port Gigabit Ethernet Switch	347.00	694.00
PROJ2-1 & PROJ2-2	2	Panasonic	PT-EZ590U	5400 ANSI Lumen, 19200x1200 (16:10), 3 LCD	3,795.00	7,590.00
PROJACC2-1 TO PROJACC2-?	2	Panasonic	ET-LAEF100	Spare projecotr lamp	342.00	684.00
PROJACC3-1 TO PROJACC3-?	2	Panasonic	ET-RFE300	Spare projector filter	90.00	180.00
PMNT1-1 TO PMNT1-2	2	Chief	RPMA302	RPA Elite Universal & Custom Ceiling Projector Mounts with Keyed Locking	156.00	312.00
BD1-1 TO BD1-2	2	Denon Pro	DN-500bd	Blue-Ray DVD player	443.00	886.00
CATVRX1-1 TO CATVRX1-?	2	Contemporary Research	232-ATSC 4	Off Air HDTV tuner, RS232 & IR control	777.00	1,554.00
CAM1-1 TO CAM1-2	2	Vaddio	RoboSHOT 30 HD-SDI (white)	Professional Class, HD PTZ Camera with PoE+ Midspan Power Injector	3,108.00	6,216.00
CAM2-1 TO CAM2-2	2	Vaddio	ClearSHOT 10 USB	HD quality PTZ camera, USB 3.0 connection, mount, 10' USB cable (USB extender required) IR control only	1,549.00	3,098.00
WMRX1-1 TO WMRX1-2	2	Shure	QLXD24/B58	Wireless Microphone System with hand held Mic	937.00	1,874.00
WMRX2-1 TO WMRX2-2	2	Shure	QLXD14/83	Wireless Microphone System with belt-pack & lapel Mic	935.00	1,870.00
DSP1-1 TO DSP1-2	2	Biamp	TesiraForte AVB AI	Digital Signal Processor	1,664.00	3,328.00
DSP2-1 TO DSP2-2	2	Biamp	Tesira EX-MOD	Remote Expander Breakout Module	1,048.00	2,096.00
AINCRD1-1 TO AINCRD1-4	4	Biamp	Tesira EIC-4	Audio Input Card (4 channels) 3 for 153, 1 for 154	197.00	788.00
AVBSW1-1 TO AVBSW1-?	2	MOTU	MOTU 9305	Five-Port AVB Ethernet Switch	328.00	656.00
CMIC1-1 TO CMIC1-8	8	Shure	MX202WP/C	Microflex, ceilinng mic, cardiod pick-up, pre-amp mounting plate, white (4 each room)	158.00	1,264.00
IRRX1-1 TO IRRX1-2	2	Sennheiser	EKI830	IR receiver	173.00	346.00
INLP1-1 TO INLP1-2	2	Sennheiser	EZT3011	induction loops	56.00	112.00
PWR2-1 TO PWR2-2	2	Furman	PL-8 Pro C	Power Distribution/Surge, 9 outlet, 20 Amp	300.00	600.00
DWR1-1 TO DWR1-2	2	Middle Atlantic	UD2	2RU utility drawer	95.00	190.00
WKBMS1-1 TO WKBMS1-?	2	Wireless Computing	RF-412	RF Wireless keyboard & optical mouse, 50' range minimum (for OFE PC for Skype calls)	200.00	400.00
	2	ICRON	Ranger 2201	Single port Cat 5e 100 meter extender	366.00	732.00
	2	WAV	LOT	Miscellaneous Materials, Cabling & Connectors	1,050.00	2,100.00
				System 3 Equipment Sub-Total:		**80,192.00**

Orange County Fire Authority

Western Audio Visual

Submitted by: Western Audio Visual

Date: 9/12/2016
Revision: A

Label	Qty	Manuf	Model	Description	Unit Price	Ext Price
				Classrooms D106, D107		
	2	Crestron	TS-1542-TILT-C-B-S	15.6" HD Touch Screen w/DM 8G+® Input, Tabletop Tilt, Black Smooth	2,511.00	5,022.00
	2	Crestron	CP3	3-Series Control System®	780.00	1,560.00
	2	Crestron	DM-MD8X8	8x8 DigitalMedia™ Switcher	1,862.00	3,724.00
	10	Crestron	DMC-4K-HD-HDCP2	4K HDMI® Input Card	347.00	3,470.00
	4	Crestron	DMC-4K-C-HDCP2	HDBaseT® Certified 4K DigitalMedia 8G+® Input Card	563.00	2,252.00
	2	Crestron	DM-TX-200-C-2G-W-T	Wall Plate DigitalMedia 8G+® Transmitter 200, White Textured	607.00	1,214.00
	4	Crestron	DM-RMC-4K-SCALER-C	4K DigitalMedia 8G+® Receiver & Room Controller w/Scaler	780.00	3,120.00
	2	Crestron	DMC-HDO	2-Channel HDMI® Output Card	304.00	608.00
	4	Crestron	DMC-4K-CO-HD-HDCP2	2-Channel HDBaseT® Certified 4K DigitalMedia 8G+® Output Card	563.00	2,252.00
	2	Crestron	HD-MD4X1-4K-E	4x1 4K HDMI® Switcher	304.00	608.00
	2	Crestron	DM-PSU-8	8-Port PoDM Power Supply for DM 8G+® I/O Cards	520.00	1,040.00
DECDR1-1 TO DECDR1-2	2	Crestron	DM-TXRX-100-STR	HD Streaming Transmitter/Receiver	866.00	1,732.00
SMP1-1 TO SMP1-2	2	Epiphan	Pearl Rackmount	Streaming Encoder & Recorder	5,370.00	10,740.00
WCLB1-1	2	Barco	CSE-200	Clickshare Wireless Presentation Gateway	1,470.00	2,940.00
NETSW2-1 TO NETSW2-1	2	Cisco	SG300-20	20-Port Gigabit Ethernet Switch	347.00	694.00
PROJ2-1 & 2-2	2	Panasonic	PT-EZ590U	5400 ANSI Lumen, 19200x1200 (16:10), 3 LCD	3,795.00	7,590.00
PROJACC2-1 TO PROJACC2-2	2	Panasonic	ET-LAEF100	Spare projecotr lamp	342.00	684.00
PROJACC3-1 TO PROJACC3-2	2	Panasonic	ET-RFE300	Spare projector filter	90.00	180.00
PMNT1-1 TO PMNT1-2	2	Chief	RPMA302	RPA Elite Universal & Custom Ceiling Projector Mounts with Keyed Locking	156.00	312.00
BD1-1 TO BD1-2	2	Denon Pro	DN-500bd	Blue-Ray DVD player	443.00	886.00
CATVRX1-1 TO CATVRX1-2	2	Contemporary Research	232-ATSC 4	Off Air HDTV tuner, RS232 & IR control	777.00	1,554.00
CAM1-1 TO CAM1-2	2	Vaddio	RoboSHOT 30 HD-SDI (white)	Professional Class, HD PTZ Camera with PoE+ Midspan Power Injector	3,108.00	6,216.00
CAM2-1 TO CAM2-2	2	Logitech	PTZ Pro Camera	HD quality PTZ camera, USB connection, mount, 10' USB cable (USB extender required) IR control only	789.00	1,578.00
WMRX1-1 TO WMRX1-2	2	Shure	QLXD24/B58	Wireless Microphone System with hand held Mic	937.00	1,874.00
WMRX2-1 TO WMRX2-2	2	Shure	QLXD14/83	Wireless Microphone System with belt-pack & lapel Mic	935.00	1,870.00
DSP1-1 TO DSP1-2	2	Biamp	TesiraForte AVB AI	Digital Signal Processor	1,664.00	3,328.00
CMIC1-1 TO CMIC1-8	8	Shure	MX202WP/C	Microflex, ceilinng mic, cardiod pick-up, pre-amp mounting plate, white	158.00	1,264.00
IRRX1-1 TO IRRX1-2	2	Sennheiser	SZI1015-W	Emitter panel for single, dual or multi channel use	833.00	1,666.00
IRRX1-1 TO IRRX1-4	4	Sennheiser	EKI830	IR receiver	173.00	692.00
INLP1-1 TO INLP1-4	4	Sennheiser	EZT3011	induction loops	56.00	224.00
MOD1-1 TO MOD1-2	2	Sennheiser	SI1015	modulator	772.00	1,544.00
EPHN1-1 TO EPHN1-4	4	Sennheiser	EP01-100	Single ear phone head set	18.00	72.00
PWR2-1 TO PWR2-2	2	Furman	PL-8 Pro C	Power Distribution/Surge, 9 outlet, 20 Amp	300.00	600.00
DWR1-1 TO DWR1-2	2	Middle Atlantic	UD2	2RU utility drawer	95.00	190.00
WKBMS1-1 TO WKBMS1-2	2	Wireless Computing	RF-412	RF Wireless keyboard & optical mouse, 50' range minimum (for OFE PC for Skype calls)	200.00	400.00
	2	ICRON	Ranger 2201	Single port Cat 5e 100 meter extender	366.00	732.00
	2	WAV	LOT	Miscellaneous Materials, Cabling & Connectors	1,050.00	2,100.00
				System 4 Equipment Sub-Total:		**76,532.00**
				TOTAL EQUIPMENT COST:		**366,608.00**

Western Audio Visual

AV System Milestone Schedule

Project # TBD

Client: Orange County Fire Authority

Prepared By: Hailey Schellin

Date: 09/14/16

ote: Fill In Green Areas with Date

	Milestone	Date	Deviation OK
01	**Project Initiated**: Contract documents have been reviewed and are complete. Contact information has been acquired, system functions and flow have been defined, schedule has been decided, and the project team has begun to understand the scope.	**10/14/16**	
02	**Submission Completed:** Signal and flow diagrams, rack elevations, panel details, projection details, Function Lists, Infrastructure details (as applicable) and List of Major Items of Equipment are submitted for approval. **One (1) Hard Copy and One (1) Electronic Copy on Disk required.**	**10/28/16**	
03	**Initial Procurement Completed:** Long lead items, installer items, equipment and hardware necessary to begin wiring and installation effort.	11/04/16	
04	**Engineering/ Programming Completed**: Wiring details, programming, configuration tables, etc., are complete.	11/11/16	
05	**Final Procurement Completed:** Equipment necessary for electrical testing and staging in the shop. This constitutes the bulk of the equipment costs.	11/25/16	
06	**Site conditions checked and verified:** All power, conduit, boxes, support structures, penetrations and other infrastructure items have been inspected for conformance to specifications.	10/28/16	
07	**Installer Items Delivered:** Electrical contractor items which includes materials such as cable, connector plates, screens, loudspeaker backboxes, projector mounts, plasma mounts, etc.	11/18/16	
08	**On site AV wiring completed:** All AV wire has been pulled and labeled; is coiled and stored to minimize damage	12/02/16	
09	**Racks Complete, Systems Staged:** Site conditions emulated; signal flow and control system functionality are checked; shop tests are complete; drawings updated	12/02/16	
10	**Rack Systems Shipped:** The staged system is carefully disassembled, packed, and sent to the jobsite.	12/07/16	
11	**Systems Installed and Operational:** Systems have been delivered, wired & terminated, tested and functional; internal punch list generated and completed; systems test reports submitted. Systems are ready for consultant/client review	**12/16/16**	
12	**Acceptance Testing and Consultant Review Completed:** Punch list items have been completed; all portable equipment and OFE equipment has been delivered and set up; Operation manuals have been delivered	12/23/16	
13	**User Training Completed:** Users and technicians have been trained on operation and maintenance	12/30/16	
14	**Service Turnover Completed:** WAV Service Manager or his/her representative is introduced to the client, all necessary information has been turned over so that the service department can begin maintaining the system throughout the warranty period.	12/30/16	
15	**Project Completed:** System has been accepted, As-builts, Owner's Manuals, related documentation delivered; reports are completed and filed.	01/20/17	

NOTES TO SCHEDULE:

1	OCFA will provide additonal details to the Western Audio Visual and coordinate schedules and relocations as necessary.	
2		
3		

Detailed Labor and Fee Breakdown
Orange County Fire Authority
RO2155 - Audio Visual Systems Upgrade - RFOTC
PLEASE VERIFY PROPER CALCULATION

LABOR RATES FEE SCHEDULE

PROJECT FEE BY TASK BY PERSONNEL

	Task Description	Project Director/Point of Contact	Project Manager	Classification 1 (Ex. Electrical) Installation	Pull/Terminate Wire	Install Racks	Mic's	Discipline 2 (Ex. Structural) Set in Place	Test/Closing	Punchlist	De-Install	Discipline 3 (Ex: Drainage) Misc.	Title	Title	Title	Discipline 4 (Ex. Survey) Title	Title	Title	Title	QA/QC	Clerical / Administrative	TOTAL HOURS PRIME CONSULTANT	TOTAL FEE Prime Consultant Name	TOTAL FEE Sub Consultant 1 Discipline (Ex. Geotechnical)	TOTAL FEE Sub Consultant 2	TOTAL FEE Sub Consultant 3	TOTAL PROJECT FEE
	Burdened Hourly Rate	$ -	$ -	$ -	$ -	$ -	$ -	$ -	$ -	$ -	$ -	$ -	$ -	$ -	$ -	$ -	$ -	$ -	$ -	$ -	$ -						
	TOTAL ESTIMATED FEE FOR PREVAILING WAGE RELATED ACTIVITIES																						$ -	$ -	$ -	$ -	$ -
TASK 1: Boardroom AE107																											
Task 1.1	Description			28	70	12	16	16	32	8	24	40										246	$ -	$ -	$ -	$ -	$ -
Task 1.2	Description																					0	$ -	$ -	$ -	$ -	$ -
Task 1.3	Description																					0	$ -	$ -	$ -	$ -	$ -
	SUBTOTAL	0	0	28	70	12	16	16	32	8	24	40	0	0	0	0	0	0	0	0	0	246	$ -	$ -	$ -	$ -	$ -
TASK 2: Breakout Room AE117																											
Task 2.1	Description			3	24	4	2	4	8	2	6	10										63	$ -	$ -	$ -	$ -	$ -
Task 2.2	Description																					0	$ -	$ -	$ -	$ -	$ -
Task 2.3	Description																					0	$ -	$ -	$ -	$ -	$ -
	SUBTOTAL	0	0	0	0	0	0	0	0	0	0	0	0	0	0	0	0	0	0	0	0	0	$ -	$ -	$ -	$ -	$ -
TASK 3: Classrooms 153,154																											
Task 3.1	Description			6	48	8	4	22	16	4	8	22										138	$ -	$ -	$ -	$ -	$ -
Task 3.2	Description																					0	$ -	$ -	$ -	$ -	$ -
Task 3.3	Description																					0	$ -	$ -	$ -	$ -	$ -
	SUBTOTAL	0	0	0	0	0	0	0	0	0	0	0	0	0	0	0	0	0	0	0	0	0	$ -	$ -	$ -	$ -	$ -
Task 4: Classrooms D106,D107																											
Task 4.1	Description			6	48	8	4	22	16	4	8	22										138	$ -	$ -	$ -	$ -	$ -
Task 4.2	Description																					0	$ -	$ -	$ -	$ -	$ -
Task 4.3	Description																					0	$ -	$ -	$ -	$ -	$ -
	SUBTOTAL	0	0	0	0	0	0	0	0	0	0	0	0	0	0	0	0	0	0	0	0	0	$ -	$ -	$ -	$ -	$ -
TASK 5: DESCRIPTION																											
Task 5.1	Description																					0	$ -	$ -	$ -	$ -	$ -
Task 5.2	Description																					0	$ -	$ -	$ -	$ -	$ -
Task 5.3	Description																					0	$ -	$ -	$ -	$ -	$ -
	SUBTOTAL	0	0	0	0	0	0	0	0	0	0	0	0	0	0	0	0	0	0	0	0	0	$ -	$ -	$ -	$ -	$ -
	TOTAL LABOR FOR PREVAILING WAGE RELATED ACTIVITIES	0	0	28	70	12	16	16	32	8	24	40	0	0	0	0	0	0	0	0	0	585	$ -	$ -	$ -	$ -	$ -
Other Direct Costs																											
Task 1	Description																						$ -	$ -	$ -	$ -	$ -
Task 2	Description																						$ -	$ -	$ -	$ -	$ -
Task 3	Description																						$ -	$ -	$ -	$ -	$ -
Task 4	Description																						$ -	$ -	$ -	$ -	$ -
Task 5	Description																						$ -	$ -	$ -	$ -	$ -
	SUBTOTAL																						$ -	$ -	$ -	$ -	$ -
	TOTAL ESTIMATED FEE FOR TRAINING, SUPPORT, AND OTHER NON-PREVAILING WAGE RELATED ACTIVITIES																						$ -	$ -	$ -	$ -	$ -
OPTIONAL ITEMS (IF ANY)																											
TASK 6: DESCRIPTION																											
Task 6.1	Description																					0	$ -	$ -	$ -	$ -	$ -
Task 6.2	Description																					0	$ -	$ -	$ -	$ -	$ -
Task 6.3	Description																					0	$ -	$ -	$ -	$ -	$ -
	SUBTOTAL	0	0	0	0	0	0	0	0	0	0	0	0	0	0	0	0	0	0	0	0	0	$ -	$ -	$ -	$ -	$ -
TASK 7: DESCRIPTION																											
Task 7.1	Description																					0	$ -	$ -	$ -	$ -	$ -
Task 7.2	Description																					0	$ -	$ -	$ -	$ -	$ -
Task 7.3	Description																					0	$ -	$ -	$ -	$ -	$ -
	SUBTOTAL	0	0	0	0	0	0	0	0	0	0	0	0	0	0	0	0	0	0	0	0	0	$ -	$ -	$ -	$ -	$ -
TASK 8: DESCRIPTION																											
Task 8.1	Description																					0	$ -	$ -	$ -	$ -	$ -
Task 8.2	Description																					0	$ -	$ -	$ -	$ -	$ -
Task 8.3	Description																					0	$ -	$ -	$ -	$ -	$ -
	SUBTOTAL	0	0	0	0	0	0	0	0	0	0	0	0	0	0	0	0	0	0	0	0	0	$ -	$ -	$ -	$ -	$ -
	TOTAL LABOR FOR NON-PREVAILING WAGE RELATED ACTIVITIES	0	0	0	0	0	0	0	0	0	0	0	0	0	0	0	0	0	0	0	0	0	$ -	$ -	$ -	$ -	$ -
Other Direct Costs (Optional)																											
Task 6	Description																						$ -	$ -	$ -	$ -	$ -
Task 7	Description																						$ -	$ -	$ -	$ -	$ -
Task 8	Description																						$ -	$ -	$ -	$ -	$ -
	SUBTOTAL																						$ -	$ -	$ -	$ -	$ -
	TOTAL ESTIMATED FEE FOR TRAINING, SUPPORT, AND OTHER NON-PREVAILING WAGE RELATED ACTIVITIES																						$ -	$ -	$ -	$ -	$ -
	TOTAL ESTIMATED LABOR FEES FOR PREVAILING WAGE AND NON-PREVAILING WAGE ACTIVITIES																						$ -	$ -	$ -	$ -	$ -

1. BIDDER'S INFORMATION (REQUIRED)

Bidder's Name Western A/V

Bidder's Business Address 1592 N. Batavia St, Suite 2, Orange, CA, 92867

Contact Name Hailey Schellin E-Mail Address haileys@wav1.com

Taxpayer ID Number 202840423

Telephone Number 714-637-7272 Fax Number 714-637-7330

California Contractors License Number and Class C-7 (Low Voltage): 871609

Original Issue Date 1/26/2006 Expiration Date 1/31/2018

How many years has the Bidder been in business under the present name? 11 years (Since 2005)

What other names has the Bidder operated under?

Western Audio Visual

If your company is owned by an individual or partnership, answer the following questions:

Date of Organization _____ Type _____
(i.e. general or limited partnership)

Name and address of all partners

_____

_____

_____

If other than a corporation or partnership, describe organization and name principals.

_____

_____

List other states in which Bidder is legally qualified to do business.

_____

_____

What type of work does the Bidder normally perform with its own forces?

_____

Has the Bidder ever failed to complete any work awarded? If so, note when, why and where.

_____

Have any of the current officers/partners of the Bidder's company ever been an officer/partner of another company that failed to complete a contract within the past five years? If so, please submit a separate page providing an explanation.

2. LIST OF PAST PROJECTS

The Bidder must demonstrate knowledge of public construction techniques and must possess a working ability to perform a similar scope of construction work for other public agencies. The following are the names addresses, phone numbers, and contact information for three projects for which the Bidder has performed as specified above within the past three (3) years. **Failure to provide the requested information may cause your bid to be rejected as non-responsive.**

Agency Name LOS ANGELES FIRE & POLICE PENSION

Address 701 E. 3rd STREET, STE. 200, LOS ANGELES CA 90013

Contact Person TERESA GUERRERO

Telephone Number 213-279-3064 E-mail TERESA.GUERRERO@LAFPP.COM

Scope of Work/Dollar Amount $362,122 ; A/V Integration

Agency Name City of Temecula

Address 41000 Main Street, Temecula, CA, 92590

Contact Person Jonathan Hall

Telephone Number 951-308-6323 E-mail jonathan.hall@cityoftemecula.org

Scope of Work/Dollar Amount $1.2 Million ; A/V Integration

Agency Name City of Carlsbad

Address 1200 Carlsbad Village Drive, Carlsbad, CA, 92008

Contact Person Barbara Van Rekom

Telephone Number 760-602-7549 E-mail Barbara.VanRekom@carlsbadca.gov

Scope of Work/Dollar Amount $400,000 ; A/V Integration

Agency Name County of San Bernardino

Address 670 East Gilbert Street, San Bernardino, CA, 92415

Contact Person Bruce Henson

Telephone Number 909-388-0723 E-mail bhenson@isd.sbcounty.gov

Scope of Work/Dollar Amount $825,000 ; A/V Integration

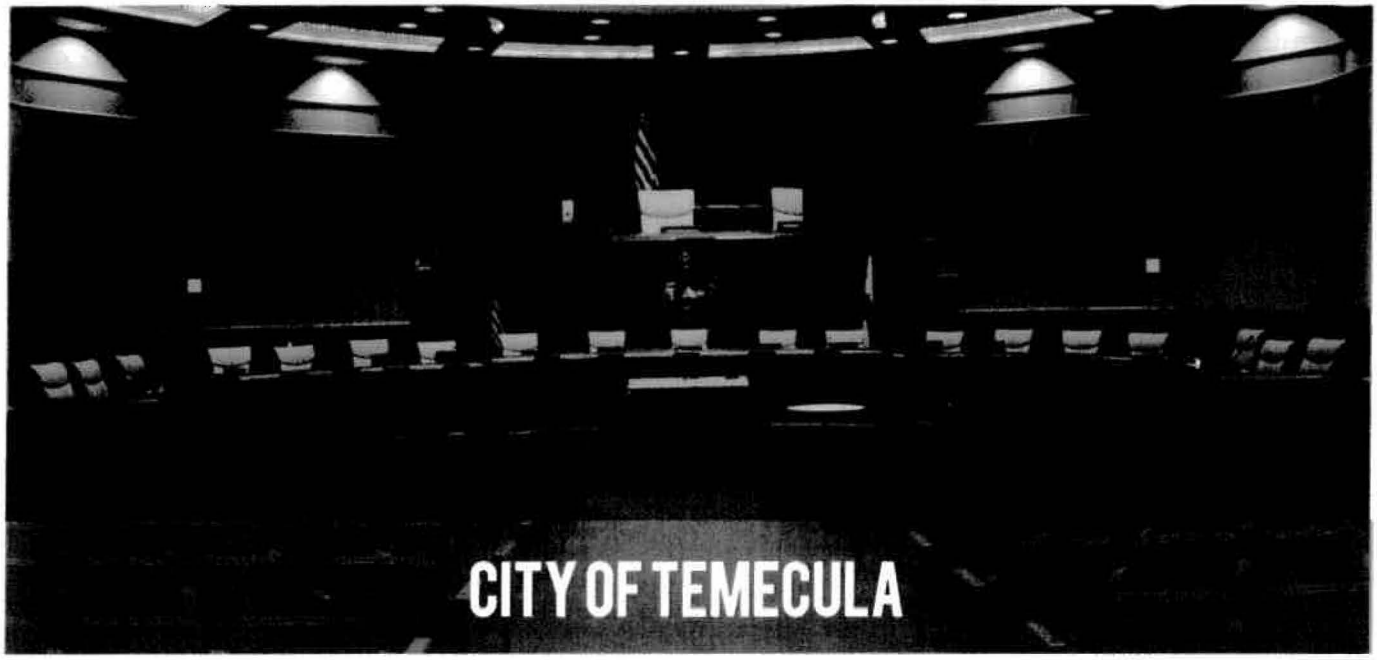

CITY OF TEMECULA

CONTRACT AMOUNT:

$1.2 MILLION

DESIGNER:

ERIK WILSON,

WESTERN AUDIO VISUAL

PROJECT DESCRIPTION

As part of the new City Hall facility, the City of Temecula installed this state-of-art Multimedia presentation and Voting system. At the heart of the system is a custom AMX control system which allows the Deputy City Clerk to take complete control of all functions of the system including lighting control, full microphone control and all recording functions. A variety of sources including VHS playback, DVD playback, Document Camera, Laptop computer, Network PC and the local broadcast feed can be projected on the 195" diagonal RP Visuals rear projection system using a 10,000 Lumen, high resolution Panasonic DLP projector. In addition, all sources can also be displayed on 19" monitors, located at the council dais and staff locations. These same monitors are used for voting as well. All video and audio signals are routed to the local cable company for public broadcast using a Leightronix Nexus event scheduler. The Nexus also provides all content for the local PEG channels. All meetings are streamed to the Site website for archived playback as well. All voting functions and paperless agendas are handled by the Sire system as well. An audio recording system saves all of the proceedings on the network computer for dictation at a later time if necessary. The system not only allows more efficient communication within the Council Chambers during proceedings, but provides the public with more of the information that is being presented during the bimonthly meetings within the City of Temecula Council Chambers.

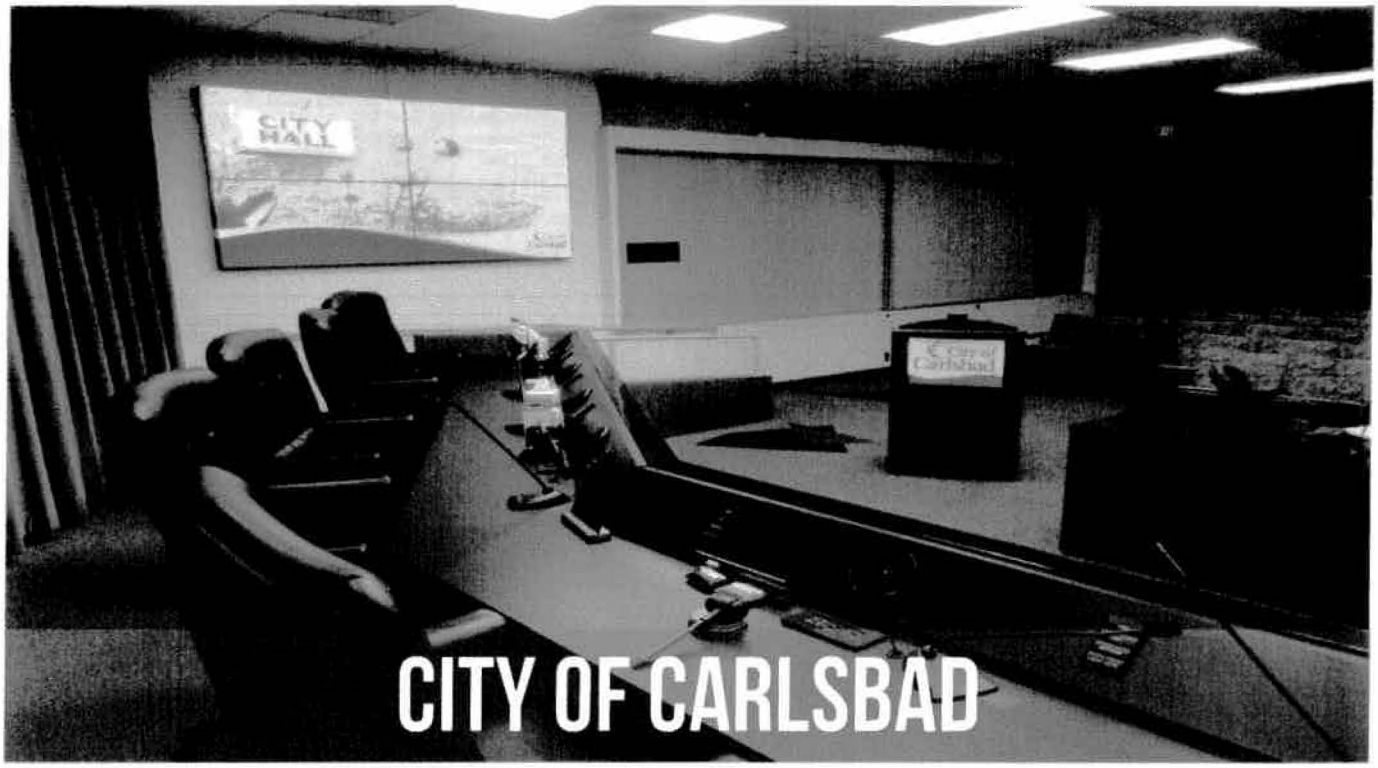

CITY OF CARLSBAD

CONTRACT AMOUNT:

$400,000

COMPLETION DATE:

AUGUST 2015

PROJECT DESCRIPTION

THE CITY OF CARLSBAD CHOSE TO WORK WITH WESTERN A/V ON THEIR COMPLETE STATE-OF-THE-ART UPGRADE PROJECT FOR THEIR COUNCIL CHAMBER AND BROADCAST SYSTEM. THE CITY CHOSE TO IMPLEMENT TWO (ADA COMPLIANT) PLANAR 2X2 VIDEO WALLS ON EACH SIDE OF THE COUNCIL CHAMBER. THIS UPGRADE INCLUDED A BIAMP TESIRA DSP, AND A MULTIZONE DISTRIBUTED LOUDSPEAKER SYSTEM THAT CAN BE EMPLOYED FOR MIXED MEDIA, AUDIO CONFERENCING, AND VOICE AUDIO REINFORCEMENT IN THE COUNCIL CHAMBER, COUNCIL CHAMBERS LOBBY, CONFERENCE ROOM, AND OUTSIDE OVERFLOW AREA. AS PART OF THIS UPGRADE, THE CITY OF CARLSBAD ALSO DECIDED TO UPGRADE THEIR LIGHTING IN THE COUNCIL CHAMBER. THE NEW SYSTEM IS CONTROLLED BY AN AMX ENOVA CONTROL SYSTEM.

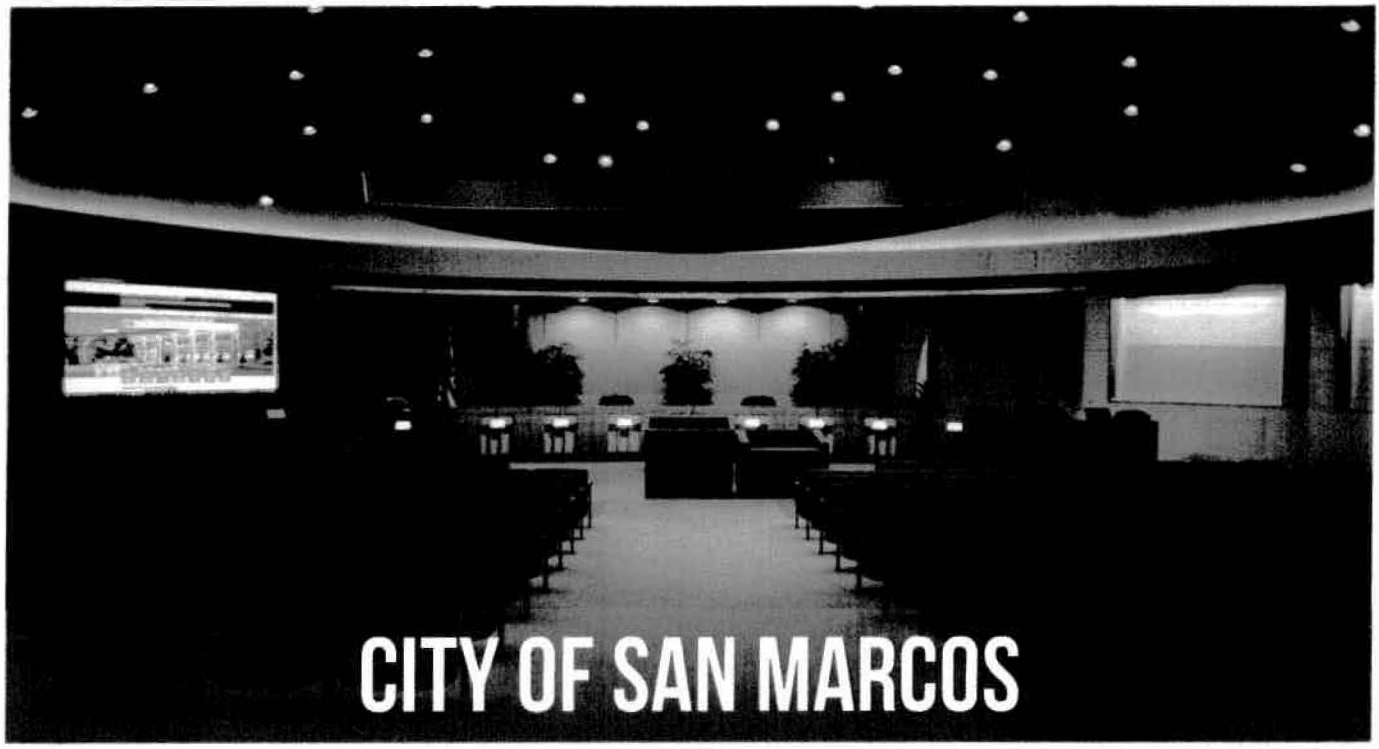

CITY OF SAN MARCOS

CONTRACT AMOUNT:

$400,000

COMPLETION DATE:

MARCH 2016

DESIGNER:

ERIK WILSON

THE CITY OF SAN MARCOS CHOSE TO WORK WITH WESTERN AUDIO VISUAL FOR THEIR COUNCIL CHAMBER UPGRADE PROJECT. AT THE FOREFRONT OF THEIR SYSTEM IS A 80" H X 142.25" W OPTICAL SCREEN BACKED BY A CUSTOM REAR PROJECTION SYSTEM, UTILIZING AN 11,000 LUMEN CHRISTIE PROJECTOR. THE CITY CHOSE TO IMPLEMENT DIGITAL NAME PLATES AT THE DAIS, SINCE SEVERAL TYPES OF MEETINGS TAKE PLACE IN THAT SPACE. PART OF THE COMPLETE AUDIO SYSTEM OVERHAUL INCLUDED A NEW ASSISTED LISTENING SYSTEM THAT IS ADA COMPLIANT. TO CONTROL THE SYSTEM, THEY HAVE A CRESTRON CONTROL SYSTEM AND A 16X16 DIGITAL MEDIA SWITCHER. IN ADDITION, WESTERN A/V UPGRADED THE OVERFLOW AREA, AS WELL AS A CONFERENCE ROOM.

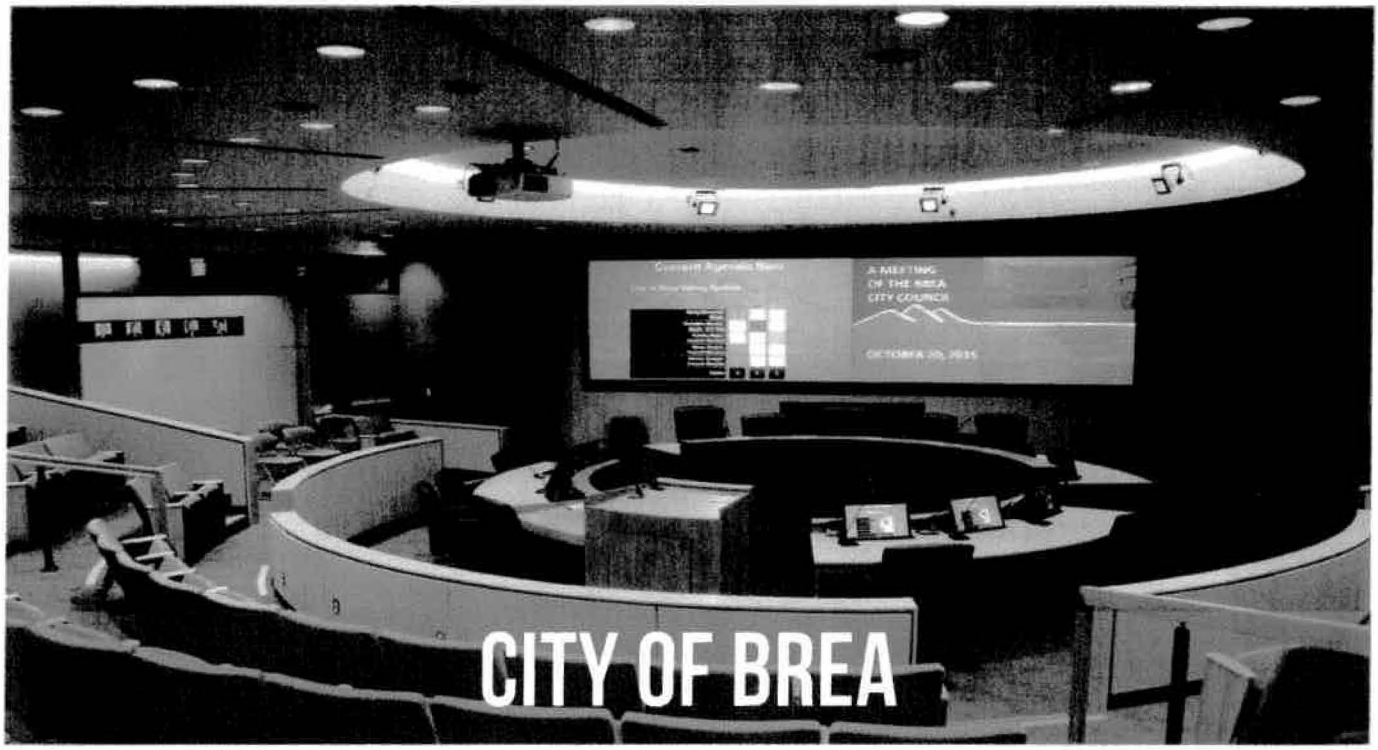

CITY OF BREA

CONTRACT AMOUNT:
$375,000

COMPLETION DATE:
JANUARY 2016

PROJECT DESCRIPTION

THE CITY OF BREA CHOSE TO WORK WITH WESTERN AUDIO VISUAL FOR THEIR UPGRADE PROJECT IN THE COUNCIL CHAMBER. THE MAIN FOCUS OF THEIR UPGRADE WAS TO IMPROVE THE QUALITY OF THEIR AUDIO SYSTEM. TO ACCOMPLISH THIS, THEY IMPLEMENTED A BIAMP TESIRA DSP. PART OF THIS NEW AUDIO SYSTEM INCLUDED A NEW ADA COMPLIANT ASSISTED LISTENING SYSTEM. THEY ALSO UPGRADED THEIR DUAL REAR PROJECTION SYSTEM WITH TWO 8,500 LUMEN PROJECTORS. IN ADDITION, THEY ADDED ALL NEW LIGHTING FROM BRIGHTLINE, TO HELP ENHANCE THEIR IMAGES BEING SENT TO THEIR BROADCAST. CONTROLLING EVERYTHING IS AN AMX ENOVA CONTROL SYSTEM.

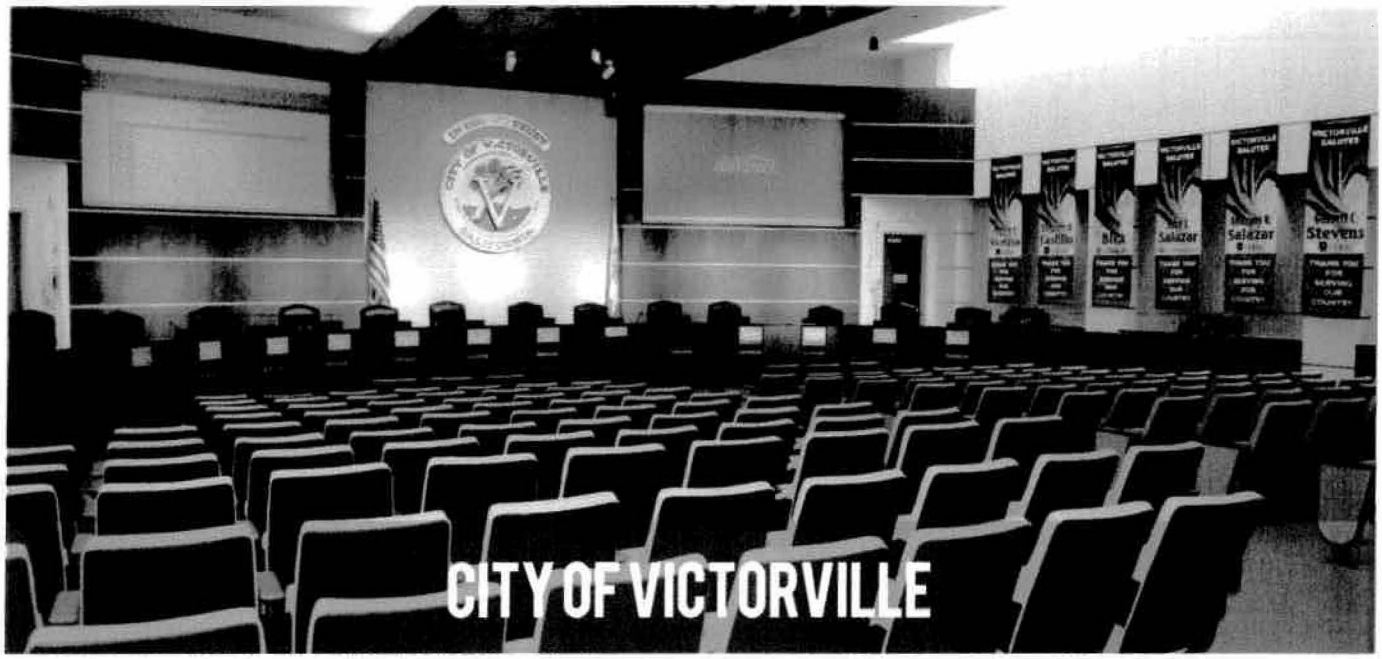

CITY OF VICTORVILLE

CONTRACT AMOUNT:

$1.2 MILLION

DESIGNER:

ERIK WILSON,

WESTERN AUDIO VISUAL

PROJECT DESCRIPTION

The council chambers is the focal point of the refurbishment of the City Hall in Victorville, CA. In addition to this council chamber, Western AV integrated a full suite of technologies into conference rooms, training rooms and an emergency operations center.

3. LIST OF CURRENT PROJECTS

Provide a list of the current projects; duplicate this page if more space is needed.

Project	Description of Bidder's Work	Completion Date	Project Cost
In-N-Out	Audio Visual Integration	9/15/2016	$259,818
Childrens Hospital LA	" "	10/30/2016	$121,300
Claremont McKenna College	" "	9/30/2016	$900,344
NY Life	" "	12/1/2016	$202,397
LA Rams	" "	9/30/2016	$168,868
City of Whittier	" "	11/1/2016	$181,861
City of Downey	" "	11/1/2016	$102,328
City of Santa Ana	" "	9/30/2016	$72,787
City of Rolling Hills Estates	" "	9/15/2016	$117,296

4. CONTRACTOR'S LICENSING STATEMENT

The undersigned certifies that the Bidder is licensed in accordance with the laws of the State of California. The successful Bidder and subcontractors are required to hold the State of California Contractor's License(s) and DIR registration as required by SB854. Provide additional contractor's license details if applicable.

Contractor's License No. 871609 Class C-7 Expiration 1/31/2018

Department of Industrial Relations (DIR) # 1000008082

Name of Individual Contractor Western Audio Visual

Signature of Owner _____

Business Address 1592 N. Batavia St, Suite 2, Orange, CA, 92867

If the contractor operates under a partnership, provide the name of the firm, name, title and address below.

Name of Firm _____

Business Address _____

Name _____ Title _____

Address _____

Name _____ Title _____

Address _____

If the contractor operates under a corporation, provide the name and address below in addition to the a signatures of the President and Secretary.

Name of Corporation Western A/V

Business Address 6353 Corte del Abeto, Suite 106, Carlsbad, CA, 92011

Corporation organized under the laws of the State of California

Catherine Schellin

Signature of the Corporation President

Steven Hollingsworth

Signature of the Corporation Secretary

9/13/16

Date

5. LIST OF SUBCONTRACTORS

Bidder acknowledges and agrees that under Public Contract Code section 4100, et seq., it must clearly set forth below the name and location of each subcontractor who will perform work or labor or render service to the bidder in or about the construction of the work in an amount in excess of one-half of one percent (0.5%) of bidder's total bid and the kind of work that each will perform. Furthermore, bidder acknowledges and agrees that under Public Contract Code section 4100, et seq., if bidder fails to list any portion of work, or if bidder lists more than one subcontractor to perform the same portion of work (i.e. bidder must indicate what portion of the work each subcontractor will perform), bidder must perform that portion itself or be subjected to penalty under applicable law.

If alternate bids are called for and bidder intends to use subcontractors different from or in addition to those subcontractors listed for work under the base bid, bidder must list subcontractors that will perform work in an amount in excess of one half of one percent (0.5%) of bidder's total bid, including alternates.

In case more than one subcontractor is named for the same kind of work, the Contractor is to state the portion of work that each subcontractor will perform. Bidders or suppliers of materials only do not need to be listed. If further space is required for the list of proposed subcontractors, additional sheets showing the required information, as indicated below, shall be attached hereto and made a part of this document.

Listed below is the name of each subcontractor that will perform work, labor, or render services to the undersigned related to the construction work of this project. This is to include any subcontractor that will specially fabricate and install a portion of work according to detailed drawings contained in the plans and specifications in the amount greater than one half of one percent (.05%) of the contractors total bid.

Subcontractor Name _____ **Location** _____

Portion of Work/Trade _____

Bid Amount _____

Contractor's License Number DIR Number _____ _____

Subcontractor Name _____ **Location** _____

Portion of Work/Trade _____

Bid Amount _____

Contractor's License Number DIR Number _____ _____

Subcontractor Name _____ **Location** _____

Portion of Work/Trade _____

Bid Amount _____

Contractor's License Number DIR Number _____ _____

6. DESIGNATOR OF SURETIES

Provide the names, addresses and telephone numbers for all insurance brokers and sureties the Bidder intents to purchase insurance and bonds from.

Company Name COMMERCIAL SURETY

Address 1411 N. Batavia St, Suite 201, Orange, CA, 92867

Contact Name SHAUNNA BURCHFIEL E-Mail Address SHAUNNA@COMMERCIALSURETY.COM

Telephone Number 714-516-1232 Fax Number 714-516-9563

Bond or Insurance/Type BOND

Company Name _____

Address _____

Contact Name _____ E-Mail Address _____

Telephone Number _____ Fax Number _____

Bond or Insurance/Type _____

Company Name _____

Address _____

Contact Name _____ E-Mail Address _____

Telephone Number _____ Fax Number _____

Bond or Insurance/Type _____

Company Name _____

Address _____

Contact Name _____ E-Mail Address _____

Telephone Number _____ Fax Number _____

Bond or Insurance/Type _____

7. NON-COLLUSION DECLARATION

The undersigned declares:

I am the Sales Representative (Title) of Western A/V (Name of Contractor, Partnership, Corp.)

the party making the foregoing bid.

The bid is not made in the interest of, or on behalf of, any undisclosed person, partnership, company, association, organization, or corporation. The bid is genuine and not collusive or sham. The bidder has not directly or indirectly induced or solicited any other bidder to put in a false or sham bid. The bidder has not directly or indirectly colluded, conspired, connived, or agreed with any bidder or anyone else to put in a sham bid, or to refrain from bidding. The bidder has not in any manner, directly or indirectly, sought by agreement, communication, or conference with anyone to fix the bid price of the bidder or any other bidder, or to fix any overhead, profit, or cost element of the bid price, or of that of any other bidder. All statements contained in the bid are true. The bidder has not, directly or indirectly, submitted his or her bid price or any breakdown thereof, or the contents thereof, or divulged information or data relative thereto, to any corporation, partnership, company, association, organization, bid depository, or to any member or agent thereof, to effectuate a collusive or sham bid, and has not paid, and will not pay, any person or entity for such purpose.

Any person executing this declaration on behalf of a bidder that is a corporation, partnership, joint venture, limited liability company, limited liability partnership, or any other entity, hereby represents that he or she has full power to execute, and does execute, this declaration on behalf of the bidder.

I declare under penalty of perjury under the laws of the State of California that the foregoing is true and correct and that this declaration is executed on September 13, 2016 (date)

in

Orange, CA
(city & state)

Hailey M. Schellin
(Signature)

Hailey Schellin
(Print Name)

Sales Representative
(Title)

8. CERTIFICATION OF NON-DISCRIMINATION BY CONTRACTORS

Labor Code Section 1735 requires that no discrimination be made in the employment of persons upon public works because of the race, religious creed, color, national origin, ancestry, physical handicap, medical condition, marital status or sex of such persons, except as provided in Government Code Section 12940.

The firm listed below certifies that it does not discriminate in its employment with regard to the factors set forth in Labor Code Section 1735; that it is in compliance with all federal, state and local directives and executive orders regarding non-discrimination in employment; and that it agrees to demonstrate positively and aggressively the principle of equal employment opportunity in employment.

We agree specifically:

1. To establish or observe employment policies which affirmatively promote opportunities for minority persons at all job levels.
2. To communicate this policy to all persons concerned, including all company employees, outside recruiting services, especially those serving minority communities, and to the minority communities at large.
3. To take affirmative steps to hire minority employees within the company.

Company Name Western A/V

Signature Hailey M. Schellin

Printed Name/Title of Company Representative Hailey Schellin / Sales Representative

Date 9/13/2016

Please include any additional information available regarding equal opportunity employment programs now in effect within your company.

_____

_____

_____

_____

9. DEBARMENT AND SUSPENSION CERTIFICATION

TITLE 49, CODE OF FEDERAL REGULATIONS, PART 29

The Bidder, under penalty of perjury, certifies that, except as noted below, he/she or any other person associated therewith in the capacity of owner, partner, director, officer, manager:

- Is not currently under suspension, debarment, voluntary exclusion, or determination of ineligibility by any Federal agency;
- Has not been suspended, debarred, voluntarily excluded or determined ineligible by any Federal agency within the past 3 years;
- Does not have a proposed debarment pending; and
- Has not been indicted, convicted, or had a civil judgment rendered against it by a court of competent jurisdiction in any matter involving fraud or official misconduct within the past 3 years.

If there are any exceptions to this certification, insert the exceptions in the following space.

_____

_____

_____

_____

Exceptions will not necessarily result in denial of award, but will be considered in determining bidder responsibility. For any exception noted above, indicate below to whom it applies, initiating agency, and dates of action.

Note: Providing false information may result in criminal prosecution or administrative sanctions.

Company Name Western A/V

Signature Hailey M. Schellin

Printed Name/Title of Company Representative Hailey Schellin / Sales Representative

Date September 13, 2016

10. CERTIFICATION OF SITE EXAMINATION

Each bidder shall be fully informed of the conditions relating to the construction of the work and the employment of labor thereon. Failure to do so will not relieve Contractor or subcontractor of the obligation to furnish all material and labor necessary to carry out the provisions of the contract documents.

Each bidder shall examine the site for the work described herein. Bidders shall attend a mandatory pre-bid inspection of the building(s) and site(s), conducted by the OCFA, unless otherwise specified. Failure to attend the mandatory pre-bid inspection shall be cause for rejection of the bid.

The specifications for the work show conditions as they are believed to exist. The conditions shown do not constitute a representation or warranty express or implied by the OCFA, its officers or agents that such conditions actually exist.

Each bidder also certifies it has observed the designated Contractor work areas, material equipment storage areas, access routes, as well as the ability to protect existing surface and subsurface improvements. No claim for allowance of time or money will be allowed for such matters.

This is to certify that I have examined the site and the bid is complete and there will be no additional payment for failure to examine the site thoroughly.

Date of Site Examination 8/24/2016

Company Name Western A/V

Signature Hailey M. Schell

Printed Name/Title of Company Representative Hailey Schellin / Sales Representative

Date September 13, 2016

11. PARTY AND PARTICIPANT DISCLOSURE FORMS

The attached *Party Disclosure Form* must be completed and submitted by the bidder and subcontractors with the proposal by all firms subject to the campaign contribution disclosure requirements stated on page 5 of this solicitation.

The *Participant Disclosure Form* must be completed by lobbyists or agents representing the bidder in this procurement.

It is anticipated that a recommendation for award of this contract will be presented to the Board of Directors of the OCFA for approval. (Please see next page for definitions of these terms.)

IMPORTANT NOTICE:

Basic Provisions of Government Code Section 84308

A. If you are an applicant for, or the subject of, any contract award, you are prohibited from making a campaign contribution of more than $250 to any board member or his or her alternate. This prohibition begins on the date the solicitation is initiated, and the prohibition ends three months after a final decision is rendered by the Board of Directors. In addition, no board member or alternate may solicit or accept a campaign contribution of more than $250 from you during this period.

B. These prohibitions also apply to your agents and, if you are a closely held corporation, to your majority shareholder as well. These prohibitions also apply to your subcontractor(s), joint venturer(s), and partner(s) in this proceeding. Also included are parent companies and subsidiary companies directed and controlled by you, and political action committees directed and controlled by you.

C. You must file the attached disclosure form and disclose whether you or your agent(s) have in the aggregate contributed more than $250 to any board member or his or her alternate during the 12-month period preceding the contract award.

D. If you or your agent have in the aggregate contributed more than $250 to any individual board member or his/or her alternate during the 12 months preceding the decision on the contract award or proceeding, that board member or alternate must disqualify himself or herself from the decision. However, disqualification is not required if the board member or alternate returns the campaign contribution within 30 days from the time the director knows, or should have known, about both the contribution and the fact that you are a party in the proceeding. The Party Disclosure Form should be completed and filed with your proposal, or with the first written document you file or submit after the proceeding commences.

A proceeding involving "a license, permit, or other entitlement for use" includes all business, professional, trade and land use licenses and permits, and all other entitlements[1] for use, including all entitlements for land use, all contracts[2] (other than competitively bid, labor or personal employment contracts), and all franchises.

E. Your "agent" is someone who represents you in connection with a proceeding involving a license, permit or other entitlement for use. If an individual acting as an agent is also acting in his or her capacity as an employee or member of a law, architectural, engineering, consulting firm, or similar business entity, both the business entity and the individual are "agents."

F. To determine whether a campaign contribution of more than $250 has been made by you, campaign contributions made by you within the preceding 12 months must be aggregated with those made by your agent within the preceding 12 months or the period of the agency, whichever is shorter. Contributions made by your majority shareholder (if a closely held corporation), your subcontractor(s), your joint venturer(s), and your partner(s) in this proceeding must also be included as part of the aggregation. Campaign contributions made to different directors or their alternates are not aggregated.

G. A list of the members and alternates of the Board of Directors is attached.

This notice summarizes the major requirements of Government Code Section 84308 of the Political Reform Act and 2 Cal. Adm. Code Sections 18438-18438.8 as it relates to contract awards. This notice shall not constitute legal advice, and may not be inclusive of all applicable laws and regulations.

[1] *Entitlement for the purposes of this form refers to contract award.*
[2] *All Contracts for the purposes of this form refer to the contract award of this specific solicitation.*

ORANGE COUNTY FIRE AUTHORITY
PARTY DISCLOSURE FORM

Party's Name: Western A/V

Party's Address: 1592 N. Batavia St, Suite 2
Orange, CA, 92867

Party's Telephone: 714-631-7272

Solicitation Title and Number: IFB: R02155 / Audio Visual Systems Upgrade at RFOTC

Based on the party disclosure information provided, are you or your firm subject to party disclosures?

No ☒ If no, check the box and sign below. Yes ☐ If yes, check the box, sign below and complete the form.

Date: 9/13/2016

Signature of Party and/or Agent

To be completed only if campaign contributions have been made in the preceding twelve (12) months. Attach additional copies if needed.

Board Member(s) or Alternate(s) to whom you and/or your agent made campaign contributions and dates of contribution(s) in the preceding 12 months:

Name of Member:

Name of Contributor (if other than Party):

Date(s):

Amount(s):

Name of Member:

Name of Contributor (if other than Party):

Date(s):

Amount(s):

Name of Member:

Name of Contributor (if other than Party):

Date(s):

Amount(s):

ORANGE COUNTY FIRE AUTHORITY
PARTICIPANT (AGENT) DISCLOSURE

The *Participant Disclosure Form* must be completed by lobbyists or agents representing the bidder in this procurement. (Please see next page for definitions of these terms.)

It is anticipated that a recommendation for award of this contract will be presented to the Board of Directors of the OCFA for approval.

IMPORTANT NOTICE:

Basic Provisions of Government Code Section 84308

A. If you are a participant in a proceeding involving any contract award, you are prohibited from making a campaign contribution of more than $250 to any board member or his or her alternate. This prohibition begins on the date you begin to actively support or oppose an application for contract award pending before the OCFA or any of its affiliated agencies, and continues until three months after a final decision is rendered on the application or proceeding by the Board of Directors.

No board member or alternate may solicit or accept a campaign contribution of more than $250 from you and/or your agency during this period if the board member or alternate knows or has reason to know that you are a participant.

B. The attached disclosure form must be filed if you or your agent has contributed more than $250 to any board member or alternate for the OCFA or any of its affiliated agencies during the 12-month period preceding the beginning of your active support or opposition (The disclosure form will assist the board members in complying with the law).

If you or your agent have made a contribution of more than $250 to any board member or alternate during the 12 months preceding the decision in the proceeding, that board member or alternate must disqualify himself or herself from the decision. However, disqualification is not required if the member or alternate returns the campaign contribution within 30 days from the time the director knows, or should have known, about both the contribution and the fact that you are a participant in the proceeding

The Participant Disclosure Form should be completed and filed with the proposal submitted by a party, or should be completed and filed the first time that you lobby in person, testify in person before, or otherwise directly act to influence the vote of the board members of the OCFA or any of its affiliated agencies.

1. An individual or entity is a "participant" in a proceeding involving an application for a license, permit or other entitlement for use if:

   a. The individual or entity is not an actual party to the proceeding, but does have a significant financial interest in the Authority's or one of its affiliated agencies' decisions in the proceeding.

AND

   b. The individual or entity, directly or through an agent, does any of the following:

      (1) Communicates directly, either in person or in writing, with a

board member or alternate of the OCFA or any of its affiliated agencies for the purpose of influencing the member's vote on the proposal;

(2) Communicates with an employee of the OCFA or any of its affiliated agencies for the purpose of influencing a member's vote on the proposal; or

(3) Testifies or makes an oral statement before the Board of Directors of the OCFA or any of its affiliated agencies.

2. A proceeding involving "a license, permit, or other entitlement for use" includes all business, professional, trade and land use licenses and permits, and all other entitlements for use, including all entitlements for land use; all contracts (other than competitively bid, labor, or personal employment contracts) and all franchises.

3. Your "agent" is someone who represents you in connection with a proceeding for this proposed involving a contract award. If an agent acting as an employee or member of a law, architectural, engineering, or consulting firm, or a similar business entity or corporation, both the business entity or corporation and the individual are agents.

4. To determine whether a campaign contribution of more than $250 has been made by a participant or his or her agent, contributions made by the participant within the preceding 12 months shall be aggregated with those made by the agent within the preceding 12 months or the period of the agency, whichever is shorter. Campaign contributions made to different members or alternates are not aggregated.

5. A list of the members and alternates of the Board of Directors is attached.

This notice summarizes the major requirements of Government Code Section 84308 and 2 Cal. Adm. Code Sections 18438-18438.8.

ORANGE COUNTY FIRE AUTHORITY
PARTICIPANT DISCLOSURE FORM

To be completed only if campaign contributions have been made in the preceding twelve (12) months. Attach additional copies if needed.

Prime's Firm Name: N/A

Party's Name: _____

Party's Address: _____

_____

Party's Telephone: _____

Solicitation Title and Number: _____

Date: _____ _____

Signature of Party and/or Agent

Board Member(s) or Alternate(s) to whom you and/or your agent made campaign contributions and dates of contribution(s) in the preceding 12 months:

Name of Member: _____

Name of Contributor (if other than Party): _____

Date(s): _____

Amount(s): _____

Name of Member: _____

Name of Contributor (if other than Party): _____

Date(s): _____

Amount(s): _____

Name of Member: _____

Name of Contributor (if other than Party): _____

Date(s): _____

Amount(s): _____

	Boardroom - AE107	As Specified			Equivalent Substitution Offered				Unit	Total
Label	Description of Material	Manufacturer	Model	Part Number	Manufacturer	Model	Part Number	Quantity	Price	Price
TP1-1	Black - 10" Tabletop & VESA touch panel (staff table - POE Inj required, 1 in rack on shelf)	Extron	TLP Pro 1022T	60-1601-02	Crestron	TSW-1050-B-S	10.1" Touch Screen, Black Smooth	2	$ 1,039.00	$ 2,078.00
					Crestron	TSW-1050-TTK-B-S	Tabletop Kit for TSW-1050 & TSW-1052, Black Smooth	2	$ 109.00	$ 218.00
CNTR1-1	IP Link Pro Control Processor	Extron	IPCP Pro 550	60-1418-01	Crestron	PRO3	3 Series Control System	1	$ 2,295.00	$ 2,295.00
SHLF1-1	Universal Rack Shelf Kit for 9" Deep (1 - controller, 1 - TP2-1)	Extron	RSU 129	60-190-01	N/A; included			2	$ -	$ -
TP2-1	Black - 12" Tabletop & VESA touch panel (AV control) local power	Extron	TLP Pro 1220TG	60-1341-02	Crestron	TS-1542-TILT-B-S	15.6" HD Touch Screen, Tabletop Tilt, Black Smooth	1	$ 2,078.00	$ 2,078.00
NETSW1-1	24-Port Gigabit Ethernet Switch with POE	Cisco	Catalyst 2960X-24 PD-L	WS-C2960X-24PD-L				1	$ 2,438.00	$ 2,438.00
RMTP2-1	Power Injector for XTP and Pro Series Control Systems, Staff table control panel	Extron	XTP PI 100	60-1233-01	N/A			1	$ -	$ -
CNTL1-1	12V, 1A, Connector DC Plug for TLP 1220TG	Extron	PS Series Desktop 12v Power Supply, rack, AV tech room	70-769-01	N/A			1	$ -	$ -
SHLF1-1	12V, 1A, Connector DC Plug for TLP 1020M	Extron	PS Series Desktop 12v Power Supply, rack, AV tech room	70-775-01	N/A			1	$ -	$ -
SCN1-1	ACCESS/V SCREEN (NO CASE) 136 3/4" DIAGONAL CUSTOM 16:10 *XT1000VB MATT WHITE BLACK BACKED **VIEWING AREA:72 1/2H X 116W** TOTAL TOP DROP = 4" BLACK **REQUIRED MINIMUM STEEL CASE CONSTRUCTION CASE LENGTH = 143" 115 VAC MOTOR *HOOK UP LEFT (Dias Side)	Draper	ACCESS V NC	Draper Quote #508671	Draper	ACCESS V NC	Draper Quote #508671	1	$ 2,033.00	$ 2,033.00
SCN1-2	94 1/4" DIAGONAL CUSTOM 16:10 *XT1000VB MATT WHITE BLACK BACKED VIEWING AREA: 50H X 80W TOTAL TOP DROP = 30" BLACK *SMALL WHITE CASE 97 7/8" OVERALL LENGTH 115 VAC MOTOR *HOOK UP LEFT 94 1/4" DIAGONAL CUSTOM 16:10 *XT1000VB MATT WHITE BLACK BACKED, **VIEWING AREA:50H X 80W** TOTAL TOP DROP = 30" BLACK ***SMALL WHITE CASE** 97 7/8" OVERALL LENGTH 115 VAC MOTOR *HOOK UP LEFT (Audience side)	Draper	PREMIER ELECTRIC SCREEN	Draper Quote #508671	Draper	PREMIER ELECTRIC SCREEN	Draper Quote #508671	1	$ 1,465.00	$ 1,465.00
PROJ1-1 & PROJ1-2	6500 ANSI Lumen, 3 LCD, 1920x1200 Res. (16:10), w/digital link	Panasonic	PT-EZ770ZU					2	$ 4,145.00	$ 8,290.00
PROJACC1-	Spare projector lamp	Panasonic	ET-LAE300					2	$ 569.00	$ 1,138.00
PROJACC1-	Spare projector filter	Panasonic	ET-REF300					2	$ 90.00	$ 180.00
PMNT1-1 & PMNT1-2	RPA Elite Universal & Custom Ceiling Projector Mounts with Keyed Locking	Chief	RPMA302					2	$ 156.00	$ 312.00
DISP1-1 TO DISP1-17	20" LED monitor with adjustable height stand (16:10, 1280x800) (Dias, 2 AV booth)	Dell	P2016					17	$ 159.00	$ 2,703.00
DISP2-1 TO DISP2-2	65" LED Pro display, (16:9, 1920 x 1080)	Samsung	DM65E				Drawings showed quantity of 2	2	$ 2,289.00	$ 4,578.00
WMNT1-1 TO WMNT1-	Wall mount, ultra slim (65" signage display)	Chief	RLF2				Drawings showed quantity of 2	2	$ 67.00	$ 134.00
DMNT1-1	Single Arm Desk Mount, Triple Monitor (AV Tech Booth)	Chief	KCS320B					1	$ 226.00	$ 226.00
XTPSWT1-1	Modular Digital Matrix Switchers 32x32 with SpeedSwitch® Technology, Series-2	Extron	XTP CrossPoint 3200 Frame Series 2	Custom (60-1546-002450)	Crestron	DM-MD32x32	32x32 Digital Media Switcher	1	$ 7,446.00	$ 7,446.00
	Four Input, XTP with IR/RS-232 Insertion	Extron	XTP CP 4i	70-940-01				3		$ -
	Four Input, HDMI withStereo Audio	Extron	XTP CP 4i HDMI	70-943-01				3		$ -
	Four Output, XTP with IR/RS-232 Insertion	Extron	XTP CP 4o	70-943-01				3		$ -
	Four HDMI outputs with stereo audio	Extron	XTP CP 4o HDMI	70-687-11				1		$ -
	Four Output, Analog Stereo Audio for XTP Digital System	Extron	XTP CP 4o SA	70-944-01				2		$ -
XTPTX3-1	Three Input XTP Switcher with Integrated XTP Transmitter (AV Cntl)	Extron	XTP T USW 103	60-1198-01	Crestron	DM-TX-4K-302-C	4K DigitalMedia 8G+® Transmitter 302	1	$ 866.00	$ 866.00
					Crestron	DMC-4K-HD-HDCP2	4K HDMI® Input Card	7	$ 347.00	$ 2,429.00
					Crestron	DMC-4K-C-HDCP2	HDBaseT® Certified 4K DigitalMedia 8G+® Input Card	8	$ 563.00	$ 4,504.00
					Crestron	DMC-HDO	2-Channel HDMI® Output Card	2	$ 304.00	$ 608.00
					Crestron	DMC-4K-CO-HD-HDCP2	2-Channel HDBaseT® Certified 4K DigitalMedia 8G+® Output Card	5	$ 563.00	$ 2,815.00
					Crestron	HD-DA8-4K-E	1-to-8 4K HDMI® Distribution Amplifier	3	$ 433.00	$ 1,299.00
					Crestron	DM-PSU-8	8-Port PoDM Power Supply for DM 8G+® I/O Cards	1	$ 520.00	$ 520.00
XTPTX1-1 to XTPTX1-5	Two Input XTP Transmitter - Decora® Wallplate - White	Extron	XTP T UWP 202	60-1216-13	Crestron	DM-TX-200-C-2G-W-T	Wall Plate DigitalMedia 8G+® Transmitter 200, White Textured	5	$ 607.00	$ 3,035.00
XTPRX1-1 to XTPRX1-8	XTP Scaling Receiver (1 - AV Cntl, 3 - Dias, 1 - AE117, 2 - voting display, 1 - Clerk loc.)	Extron	XTP SR HDMI	60-1199-01	Crestron	DM-RMC-4K-SCALER-C	4K DigitalMedia 8G+® Receiver & Room Controller w/Scaler	9	$ 780.00	$ 7,020.00
XTP2-1, & XTP2-2	HDMI Decora Transmitter - White (Dias wall camera inputs)	Extron	XTP T HWP 101	60-1407-13	Crestron	DM-TX-4K-100-C-1G-W-T	Wall Plate 4K DigitalMedia 8G+® Transmitter 100, White Textured	2	$ 304.00	$ 608.00
SMP1-1	H.264 Streaming Media Processor, Standard Version – 80 GB SSD	Extron	SMP 351	60-1324-01	Epiphan	Pearl Rackmount	Streaming Encoder & Recorder	1	$ 5,370.00	$ 5,370.00
HDMIDA1-1 to HDMIDA1-	Six Output HDMI	Extron	HDMI DA6	60-999-01	Crestron; see above			3	$ -	$ -
BD1-1	Blue-Ray DVD player	Denon Pro	DN-500bd					1	$ 443.00	$ 443.00
CATVRX1-1 to CATV1-3	Off Air HDTV tuner, RS232 & IR control	Contemporary Research	232-ATSC 4					3	$ 777.00	$ 2,331.00
SCLBRDG1-	HDMI and Audio to USB Scaling Bridge	Extron	MediaPort 200	60-1488-01	Vaddio	999-8210-000	AV Bridge	1	$ 1,496.00	$ 1,496.00
WCLB1-1	Wireless Collaboration Gateway - with WAP	Extron	ShareLink 200	60-1508-01	Barco	CSE-200	Clickshare Wireless Presentation Gateway	1	$ 1,470.00	$ 1,470.00
CAM1-1 to CAM1-4	HD quality PTZ camera, CCU quick connect, wall shelf	Vaddio	Robo30 QCCU	999-9917-000W	Vaddio	Roboshot 30 HD-SDI	HD-PTZ Camera with POE+ MidSpan Power Injector	4	$ 3,108.00	$ 12,432.00
CAMCNTL1-	Camera controller, switcher	Vaddio	ProductionVIEW HDMI	999-5625-000	Vaddio	ProductionVIEW HD-SDI MV	Camera Controller, switcher (HD-SDI)	1	$ 6,494.00	$ 6,494.00
TDISP2-1	22" LCD touch display for camera ProductionVIEW HDMI	Vaddio	Teletouch 22"	999-5520-022				1	$ 1,194.00	$ 1,194.00
CCLGMNT1-1 & CCLGMNT1-	Suspended Ceiling Mount for Vaddio™ Cameras	Vaddio	Ceiling mount	535-2000-206				2	$ 67.00	$ 134.00
POE3-1	AVB PoE Injector	Biamp	PH POE36U-1AT-R					2	$ 80.00	$ 160.00
DSP3-1	Digital Signal Processor, POTs line input	Biamp	TesiraForte AVB TI					1	$ 2,219.00	$ 2,219.00
DSP4-1	Digital Signal Processor, VoIP input	Biamp	TesiraForte AVB VI					1	$ 2,219.00	$ 2,219.00
AINCRD1-1 TO AINCRD1-9	Audio Input Card (4 channels)	Biamp	Tesira SEC-4					9	$ 407.00	$ 3,663.00

DSP5-1	Tesira Server-IO AVB, with AVB-1 network card, 1 DSP-2 card	Biamp	Tesira Server-IO AVB					1	$ 4,080.00	$ 4,080.00
AVBSW1-1	Five-Port AVB Ethernet Switch	MOTU	MOTU 9305					1	$ 328.00	$ 328.00
AREC1-1 TO AREC1-2	Digital Audio Recorder	Denon Pro	DN-700R					2	$ 665.00	$ 1,330.00
PCU1-1 TO PCU1-3	Portable Conference Unit, Base unit, Chairman stations (1 spare stations)	Shure	DC 6190 P					3	$ 491.00	$ 1,473.00
MIC1-1 TO MIC1-42	Gooseneck Microphone, 63 cm long, black w/XLR plug and light ring for all DM, CM, DC, FD, FC, FM and IS units fitted with XLR socket.	Shure	GM 6525					42	$ 173.00	$ 7,266.00
PCU2-1 TO PCU2-42	Portable Conference Unit, delegate stations (2 spare stations)	Shure	DC 6190 P					42	$ 491.00	$ 20,622.00
DCSCCU1-1	Central Control Unit, fully digital (For DSS590 and DCS 6000 (power supply included)	Shure	DIS-CCU-US					1	$ 1,266.00	$ 1,266.00
CUL1-1	CU 6011, CU 6105, CU 6110 Feature License	Shure	FL 6000					1	$ 1,002.00	$ 1,002.00
DCSEXT1-1	DCS LAN Extension Unit: Includes 4 Repeated outputs with 125W power each	Shure	EX 6010					1	$ 2,502.00	$ 2,502.00
	Conference Management Software	Shure	SW 6000					1	$ 1,412.00	$ 1,412.00
	Mimic/Synoptic	Shure	SW 6018					2	$ 626.00	$ 1,252.00
	Advanced Microphone Control	Shure	SW 6110 50					1	$ 1,287.00	$ 1,287.00
	Cable, 2 m, Black, STP Cat. 5e incl. connectors (RJ45) for DDS 5900 & DCS 6000	Shure	EC 6001-02					36	$ 14.00	$ 504.00
	Cable, 30 m, Black, STP Cat. 5e incl. connectors (RJ45) for DDS 5900 & DCS 6000	Shure	EC 6001-30					5	$ 64.00	$ 320.00
	Lightweight Headphones, 600 Ohms	Shure	DH 6001 H					10	$ 16.00	$ 160.00
WMIC2-1	Wireless Microphone System with hand held Mic	Shure	QLXD24/B58					1	$ 937.00	$ 937.00
WMIC1-2	Wireless Microphone System with belt-pack & lapel Mic	Shure	QLXD14/83					1	$ 935.00	$ 935.00
RFSPLT1-1	RF splitter/combiner	Shure	UA221 RF					2	$ 113.00	$ 226.00
PLT1-1 TO PLT1-2	Audio output plate with single XLR-F, white with black engraving, 1G (custom text "Press Feed - Line Level")	RCI or Panel Crafters	Custom					2	$ 34.00	$ 68.00
MIC2-1	15" Goose neck microphone with shock mount base, instlled into podium	Shure	MX415/C					1	$ 231.00	$ 231.00
SPKR1-1	Rackmount 20W Speaker System	Fostex	RM-3					1	$ 554.00	$ 554.00
MIC3-1	Voice Communication Microphone (AV control booth)	Shure	522					1	$ 134.00	$ 134.00
IRRX1-1	IR receiver	Sennheiser	EKI830					2	$ 173.00	$ 346.00
INLP1-1	induction loops	Sennheiser	EZT3011					2	$ 56.00	$ 112.00
ALSTX1-1	Emitter panel for single, dual or multi channel use (replacement for missing unit)	Sennheiser	SZI1015-W					1	$ 833.00	$ 833.00
ELVT1-1	ELECTroVOTE 32-station roll call voting system, 1 clerks control module and 32 handheld voting modules	ElectroVote						1	$ 8,985.00	$ 8,985.00
VTPNL1-1 TO VTPNL1-2	16 position Large Display Panels	ElectroVote						2	$ 3,851.00	$ 7,702.00
MMUT1-1	Audio remote control decora panel, to be wired for microphone Mute function	RDL	D-ERC1					1	$ 79.00	$ 79.00
MBX1-1	1 gang surface mount box	Extron	SMB100	60-1292-02				1	$ 167.00	$ 167.00
PWR2-1 TO PWR2-1	Power Distribution/Surge, 9 outlet, 20 Amp	Furman	PL-8 Pro C					2	$ 300.00	$ 600.00
WKBMS1-1 TO WKBMS1-2	RF Wireless keyboard & optical mouse, 50' range minimum (for OFE PCs)	Wireless Computing	RF-412					2	$ 200.00	$ 400.00
DRW1-1	2RU utility drawer	Middle Atlantic	UD2					1	$ 95.00	$ 95.00
ACPNL1-1 to ACPNL1-6	24" x 48" Accoustic panel 2" - square (ceiling cloud)	Primacoustic	F121-2448-09		Primacoustic	P102-2448-09	24"x48" Acoustic Panel 2"-square (ceiling cloud)	6	$ 62.00	$ 372.00
ANCHR1-1 TO ANCHR1-6	ROTO-1 Twist-in Cloud Anchor (12pcs)	Primacoustic	S101-1007-00		Primacoustic	F101-1009-00	Snap-on anchors anchor (50pcs)	2	$ 114.00	$ 228.00

Material Cost Sub-Total	$ 168,749.00
Estimated Tax	$ 13,851.58
Estimated Shipping	$ 1,695.73
Misc Materials	$ 2,700.00
Materials Sub-Total	$ 186,996.31
Estimated Labor, Installation, Training, Etc.	$ 51,493.93
TOTAL	$ 238,490.24

TLP Pro 1220TG	60-1341-02	Crestron	TS-1542-TILT-C-B-S	15.6" HD Touch Screen w/DM 8G+® Input, Tabletop Tilt, Black Smooth	1	$ 2,511.00	$ 2,511.00
XTP PI 140	60-1361-01	N/A; see Crestron below			1	$ -	$ -
		Crestron	DM-MD8X8	8x8 DigitalMedia™ Switcher	1	$ 1,862.00	$ 1,862.00
		Crestron	DMC-4K-HD-HDCP2	4K HDMI® Input Card	4	$ 347.00	$ 1,388.00
		Crestron	DMC-4K-C-HDCP2	HDBaseT® Certified 4K DigitalMedia 8G+® Input	3	$ 563.00	$ 1,689.00
		Crestron	DM-RMC-4K-SCALER-C	4K DigitalMedia 8G+® Receiver & Room Controller w/Scaler	1	$ 780.00	$ 780.00
		Crestron	DMC-HDO	2-Channel HDMI® Output Card	1	$ 304.00	$ 304.00
		Crestron	DMC-4K-CO-HD-HDCP2	2-Channel HDBaseT® Certified 4K DigitalMedia 8G+® Output Card	1	$ 563.00	$ 563.00
		Crestron	HD-MD4X1-4K-E	4x1 4K HDMI® Switcher	1	$ 304.00	$ 304.00
		Crestron	DM-PSU-8	8-Port PoDM Power Supply for DM 8G+® I/O Cards	1	$ 520.00	$ 520.00
		Crestron	DM-TXRX-100-STR	HD Streaming Transmitter/Receiver	1	$ 866.00	$ 866.00
IPCP Pro 550	60-1418-01	Crestron	CP3		1	$ 780.00	$ 780.00
SG300-20	SRW2016-K9-NA				1	$ 347.00	$ 347.00
RSU 129	60-190-01	Crestron; included			1	$ -	$ -
PT-EZ570UL		Panasonic	PT-EZ5900U	5400 ANSI Lumen, 1920x1200 (16:10) 3LCD	1	$ 3,795.00	$ 3,795.00
ET-LAE200		Panasonic	ET-LAEF100	Spare projector lamp	1	$ 342.00	$ 342.00
ET-REF200		Panasonic	ET-RFE300	Spare projector filter	1	$ 90.00	$ 90.00
RPMA302					1	$ 156.00	$ 156.00
DTP CrossPoint 86 4K	60-1382-01	Crestron; see above			1	$ -	$ -
DTP T UWP 232 D	60-1366-13	Crestron	DM-TX-200-C-2G-W-T	Wall Plate DigitalMedia 8G+® Transmitter 200, White Textured	2	$ 607.00	$ 1,214.00
DTP HDMI 4K 230 Rx	60-1271-13	Crestron; see above			2	$ -	$ -
DN-500bd					1	$ 443.00	$ 443.00
SW HD 4K	60-1484-01	Crestron; see above			1		
SMP 351	60-1324-01	Epiphan	Pearl Rackmount	Streaming Encoder & Recorder	1	$ 5,370.00	$ 5,370.00
232-ATSC 4					1	$ 777.00	$ 777.00
ShareLink 200	60-1508-01	Barco	CSE-200	Clickshare Wireless Presentation Gateway	1	$ 1,470.00	$ 1,470.00
Robo30 QCCU	999-9917-000W	Vaddio	RoboShot 30 HD-SDI (white)	Professional Class, HD PTZ Camera with PoE+ Midspan Power Injector	1	$ 3,108.00	$ 3,108.00
ClearSHOT 10 USB	999-9990-000W				1	$ 1,549.00	$ 1,549.00
QLXD24/B58					1	$ 937.00	$ 937.00
QLXD14/83					1	$ 935.00	$ 935.00
TesiraForte AVB AI					1	$ 1,664.00	$ 1,664.00
MX202WP/C					4	$ 158.00	$ 632.00
MOTU 9305					1	$ 328.00	$ 328.00
Tesira EX-MOD					1	$ 1,048.00	$ 1,048.00
Tesira EIC-4					2	$ 197.00	$ 394.00
EKI830					2	$ 173.00	$ 346.00
EZT3011					2	$ 56.00	$ 112.00
PL-8 Pro C					1	$ 300.00	$ 300.00
UD2					1	$ 95.00	$ 95.00
		Icron	Ranger 2201	meter extender	1	366	$ 366.00
				Material Cost Sub-Total			$ 37,385.00
				Estimated Tax			$3,105.17
				Estimated Shipping			$379.61

Bid RO2155 - Upgrade of Audio Visual Systems at RFOTC
Schedule of Values (Attachment B)

Misc Materials	$1,050.00
Materials Sub-Total	$ 41,919.78
Estimated Labor, Installation, Training, Etc.	$ 15,600.78
TOTAL	$ 57,520.56

	Classrooms AE153, AE154	As Specified			Equivalent Substitution Offered				Unit	Total
	Description of Material	Manufacturer	Model	Part Number	Manufacturer	Model	Part Number	Qty	Price	Price
TP2-1 TO TP2-2	Black - 12" Tabletop & VESA touch panel	Extron	TLP Pro 1220TG	60-1341-02	Crestron	TS-1542-TILT-C-B-S	15.6" HD Touch Screen w/ DM 8G+ input, tabletop tilt, black smooth	2	$ 2,511.00	$ 5,022.00
POE1-1 TO POE1-	Single Port Power Injector	Extron	XTP PI 140	60-1361-01	Crestron	Crestron; see below	Crestron; see below	2	$ -	$ -
CNTL1-1 TO CNTL1-2	IP Link Pro Control Processor	Extron	IPCP Pro 550	60-1418-01	Crestron	CP3	3-Series Control System	2	$ 780.00	$ 1,560.00
NETSW2-1 TO NETSW2-1	20-Port Gigabit Ethernet Switch	Cisco	SG300-20	SRW2016-K9-NA				2	$ 347.00	$ 694.00
SHLF1-1 TO SHLF1-2	Universal Rack Shelf Kit for 9" Deep	Extron	RSU 129	60-190-01	Crestron		Crestron; see below	2	$ -	$ -
									$ -	$ -
PROJ2-1 & PROJ2-2	5000 ANSI Lumen, 19200x1200 (16:10), 3 LCD	Panasonic	PT-EZ570UL		Panasonic	PT-EZ590U	5400 ANSI Lumen, 1920x1200 (16:10), 3LCD	2	$ 3,795.00	$ 7,590.00
PROJACC2-1 TO PROJACC2-2	Spare projecotr lamp	Panasonic	ET-LAE200		Panasonic	ET-LAEF100	Spare Projector Lamp	2	$ 342.00	$ 684.00
PROJACC3-1 TO PROJACC3-2	Spare projector filter	Panasonic	ET-REF200		Panasonic	ET-RFE300	Spare Projector Filter	2	$ 90.00	$ 180.00
PMNT1-1 TO PMNT1-2	RPA Elite Universal & Custom Ceiling Projector Mounts with Keyed Locking	Chief	RPMA302					2	$ 156.00	$ 312.00
DPTSWT1-1 TO DTPSWT1-2	Preamp Output, w/o Amplifier and Control Processor, 4K backbone	Extron	DTP CrossPoint 86 4K	60-1382-01	Crestron	Crestron; see below		2	$ -	$ -
HDMISW1-1 TO HDMISW1-2	SW4 HD 4K w/ Contact Closure, RS232	Extron	SW HD 4K	60-1484-01	Crestron	Crestron; see below		2	$ -	$ -
					Crestron	DM-MD8X8	8x8 DigitalMedia™ Switcher	2	$ 1,862.00	$ 3,724.00
					Crestron	DMC-4K-HD-HDCP2	4K HDMI® Input Card	10	$ 347.00	$ 3,470.00
					Crestron	DMC-4K-C-HDCP2	HDBaseT® Certified 4K DigitalMedia 8G+® Input Card	6	$ 563.00	$ 3,378.00
DTPTX1-1 TO DTPTX1-4	HDMI, VGA, WP Decora Tx, White – 230 feet (70 m)	Extron	DTP T UWP 232 D	60-1366-13	Crestron	DM-TX-200-C-2G-W-T	Wall Plate DigitalMedia 8G+® Transmitter 200, White Textured	4	$ 607.00	$ 2,428.00
DTPTX2-1 TO DTPTX2-2	HDMI Tx - 230 feet (70 m)	Extron	DTP HDMI 4K 230 Tx	60-1271-12	Crestron	Crestron; see below		2	$ -	$ -
DTPRX1-1 TO DTPRX1-9	HDMI Rx - 230 feet (70 m) (2 for TP2-1)	Extron	DTP HDMI 4K 230 Rx	60-1271-13	Crestron	Crestron; see below		9	$ -	$ -
					Crestron	DM-RMC-4K-SCALER-C	4K DigitalMedia 8G+® Receiver & Room Controller	4	$ 780.00	$ 3,120.00
					Crestron	DMC-HDO	2-Channel HDMI® Output Card	2	$ 304.00	$ 608.00
					Crestron	DMC-4K-CO-HD-HDCP2	2-Channel HDBaseT® Certified 4K DigitalMedia 8G+® Output Card	4	$ 563.00	$ 2,252.00
					Crestron	HD-MD4X1-4K-E	4x1 4K HDMI® Switcher	2	$ 304.00	$ 608.00
					Crestron	DM-PSU-8	8-Port PoDM Power Supply for DM 8G+® I/O Cards	2	$ 520.00	$ 1,040.00
SMP1-1 TO SMP1-2	H.264 Streaming Media Processor, Standard Version – 80 GB SSD	Extron	SMP 351	60-1324-01	Epiphan	Pearl Rackmount	Streaming Encoder & Recorder	2	$ 5,370.00	$ 10,740.00
DECDR1-1 TO DECDR1-2	H.264 Streaming Media Decoder	Extron	SMD 101	60-1305-01	Crestron	DM-TXRX-100-STR	HD Streaming Transmitter/Receiver	2	$ 866.00	$ 1,732.00
BD1-1 TO BD1-2	Blue-Ray DVD player	Denon Pro	DN-500bd					2	$ 443.00	$ 886.00
CATVRX1-1 TO CATVRX1-2	Off Air HDTV tuner, RS232 & IR control	Contemporary Research	232-ATSC 4					2	$ 777.00	$ 1,554.00
WCLB1-1 TO WCLB1-2	Wireless Collaboration Gateway - with WAP	Extron	ShareLink 200	60-1508-01	Barco	CSE-200	Clickshare Wireless Presenta	2	$ 1,470.00	$ 2,940.00
CAM1-1 TO CAM1-2	HD quality PTZ camera, CCU quick connect, wall shelf	Vaddio	Robo30 QCCU	999-9917-000W	Vaddio	RoboShot 30 HD-SDI (white)	Professional Class, HD PTZ Camera with PoE+ Midspan Power Injector	2	$ 3,108.00	$ 6,216.00
CAM2-1 TO CAM2-2	HD quality PTZ camera, USB 3.0 connection, mount, 10' USB cable (USB extender required) IR control only	Vaddio	ClearSHOT 10 USB	999-9990-000W				2	$ 1,549.00	$ 3,098.00
WMRX1-1 TO WMRX1-2	Wireless Microphone System with hand held Mic	Shure	QLXD24/B58					2	$ 937.00	$ 1,874.00
WMRX2-1 TO WMRX2-2	Wireless Microphone System with belt-pack & lapel Mic	Shure	QLXD14/83					2	$ 935.00	$ 1,870.00
DSP1-1 TO DSP1-2	Digital Signal Processor	Biamp	TesiraForte AVB AI					2	$ 1,664.00	$ 3,328.00
DSP2-1 TO DSP2-2	Remote Expander Breakout Module	Biamp	Tesira EX-MOD					2	$ 1,048.00	$ 2,096.00
AINCRD1-1 TO AINCRD1-4	Audio Input Card (4 channels) 3 for 153, 1 for 154	Biamp	Tesira EIC-4					4	$ 197.00	$ 788.00
AVBSW1-1 TO AVBSW1-2	Five-Port AVB Ethernet Switch	MOTU	MOTU 9305					2	$ 328.00	$ 656.00

CMIC1-1 TO CMIC1-8	Microflex, ceilinng mic, cardiod pick-up, pre-amp mounting plate, white (4 each room)	Shure	MX202WP/C					8	$ 158.00	$ 1,264.00
IRRX1-1 TO IRRX1-2	IR receiver	Sennheiser	EKI830					2	$ 173.00	$ 346.00
INLP1-1 TO INLP1-	induction loops	Sennheiser	EZT3011					2	$ 56.00	$ 112.00
PWR2-1 TO PWR2-2	Power Distribution/Surge, 9 outlet, 20 Amp	Furman	PL-8 Pro C					2	$ 300.00	$ 600.00
DWR1-1 TO DWR1-2	2RU utility drawer	Middle Atlantic	UD2					2	$ 95.00	$ 190.00
WKBMS1-1 TO WKBMS1-2	RF Wireless keyboard & optical mouse, 50' range minimum (for OFE PC for Skype calls)	Wireless Computing	RF-412					2	$ 200.00	$ 400.00
					ICRON	Ranger 2201	Single port Cat 5e 100 meter extender	2	$ 366.00	$ 732.00

Material Cost Sub-Total	$ 78,092.00
Estimated Tax	$6,478.73
Estimated Shipping	$792.13
Misc Materials	$2,100.00
Materials Sub-Total	$ 87,462.86
Estimated Labor, Installation, Training, Etc.	$ 22,696.11
TOTAL	$ 110,158.97

	Training Building D, Classrooms D106, D107	As Specified			Equivalent Substitution Offered				Unit	Total
	Description of Material	Manufacturer	Model	Part Number	Manufacturer	Model	Part Number	Quantity	Price	Price
TP2-1 TO TP2-1	Black - 12" Tabletop & VESA touch panel	Extron	TLP Pro 1220TG	60-1341-02	Crestron	TS-1542-TILT-C-B-S	15.6" HD Touch Screen w/DM 8G+® Input, Tabletop Tilt, Black Smooth	2	$ 2,511.00	$ 5,022.00
POE1-1 TO POE1-2	Single Port Power Injector	Extron	XTP PI 140	60-1361-01	Crestron; see below			2	$ -	$ -
CNTL1-1 TO CNTL1-2	IP Link Pro Control Processor	Extron	IPCP Pro 550	60-1418-01	Crestron	CP3	3-Series Control System	2	$ 780.00	$ 1,560.00
NETSW2-1 TO NETSW2-1	20-Port Gigabit Ethernet Switch	Cisco	SG300-20	SRW2016-K9-NA				2	$ 347.00	$ 694.00
SHLF1-1 TO SHLF1-2	Universal Rack Shelf Kit for 9" Deep	Extron	RSU 129	60-190-01	Crestron; see below			2	$ -	$ -
PROJ2-1 & 2-2	5000 ANSI Lumen, 19200x1200 (16:10), 3 LCD	Panasonic	PT-EZ570UL		Panasonic	PT-EZ590U	5400 ANSI Lumen, 19200x1200 (16:10), 3 LCD	2	$ 3,795.00	$ 7,590.00
PROJACC2-1 TO PROJACC2-2	Spare projecotr lamp	Panasonic	ET-LAE200		Panasonic	ET-LAEF100	Spare projecotr lamp	2	$ 342.00	$ 684.00
PROJACC3-1 TO PROJACC3-2	Spare projector filter	Panasonic	ET-REF200		Panasonic	ET-RFE300	Spare projector filter	2	$ 90.00	$ 180.00
PMNT1-1 TO PMNT1-2	RPA Elite Universal & Custom Ceiling Projector Mounts with Keyed Locking	Chief	RPMA302					2	$ 156.00	$ 312.00
DPTSWT1-1 TO DTPSWT1-2	Preamp Output, w/o Amplifier and Control Processor, 4K backbone	Extron	DTP CrossPoint 86 4K	60-1382-01	Crestron	Crestron; see below		2	$ -	$ -
HDMISW1-1 TO HDMISW1-2	SW4 HD 4K w/ Contact Closure, RS232	Extron	SW HD 4K	60-1484-01	Crestron	Crestron; see below		2	$ -	$ -
BD1-1 TO BD1-2	Blue-Ray DVD player	Denon Pro	DN-500bd					2	$ 443.00	$ 886.00
DTPTX1-1 TO DTPTX1-2	HDMI, VGA, WP Decora Tx, White – 230 feet (70 m) (MNT IN FB)	Extron	DTP T UWP 232 D	60-1366-13	Crestron	Crestron; see below		2	$ -	$ -
DTPTX2-1 TO DTPTX2-2	HDMI Tx - 230 feet (70 m)	Extron	DTP HDMI 4K 230 Tx	60-1271-12	Crestron	Crestron; see below		2	$ -	$ -
DTPRX1-1 TO DTPRX1-8	HDMI Rx - 230 feet (70 m) (2 for TP2-1)	Extron	DTP HDMI 4K 230 Rx	60-1271-13	Crestron	Crestron; see below		8	$ -	$ -
					Crestron	DM-MD8X8	8x8 DigitalMedia™ Switcher	2	$ 1,862.00	$ 3,724.00
					Crestron	DMC-4K-HD-HDCP2	4K HDMI® Input Card	10	$ 347.00	$ 3,470.00
					Crestron	DMC-4K-C-HDCP2	HDBaseT® Certified 4K DigitalMedia 8G+® Input Card	4	$ 563.00	$ 2,252.00
					Crestron	DM-TX-200-C-2G-W-T	Wall Plate DigitalMedia 8G+® Transmitter 200, White Textured	2	$ 607.00	$ 1,214.00
					Crestron	DM-RMC-4K-SCALER-C	4K DigitalMedia 8G+® Receiver & Room Controller	4	$ 780.00	$ 3,120.00
					Crestron	DMC-HDO	2-Channel HDMI® Output Card	2	$ 304.00	$ 608.00
					Crestron	DMC-4K-CO-HD-HDCP2	2-Channel HDBaseT® Certified 4K DigitalMedia 8G+® Output Card	4	$ 563.00	$ 2,252.00
					Crestron	HD-MD4X1-4K-E	4x1 4K HDMI® Switcher	2	$ 304.00	$ 608.00
					Crestron	DM-PSU-8	8-Port PoDM Power Supply for DM 8G+® I/O Cards	2	$ 520.00	$ 1,040.00
SMP1-1 TO SMP1-2	H.264 Streaming Media Processor, Standard Version – 80 GB SSD	Extron	SMP 351	60-1324-01	Epiphan	Pearl Rackmount	Streaming Encoder & Recorder	2	$ 5,370.00	$ 10,740.00
DECDR1-1 TO DECDR1-2	H.264 Streaming Media Decoder	Extron	SMD 101	60-1305-01	Crestron	DM-TXRX-100-STR	HD Streaming Transmitter/Receiver	2	$ 866.00	$ 1,732.00
CATVRX1-1 TO CATVRX1-2	Off Air HDTV tuner, RS232 & IR control	Contemporary Research	232-ATSC 4					2	$ 777.00	$ 1,554.00
WCLB1-1 TO WCLB1-2	Wireless Collaboration Gateway - with WAP	Extron	ShareLink 200	60-1508-01	Barco	CSE-200	Clickshare Wireless Presentation Gateway	2	$ 1,470.00	$ 2,940.00
CAM1-1 TO CAM1-2	HD quality PTZ camera, CCU quick connect, ceiling mounted	Vaddio	Robo30 QCCU	999-9917-000W	Vaddio	Roboshot 30 HD-SDI (white)	Professional Class, HD PTZ Camera with PoE+ Midspan Power Injector	2	$ 3,108.00	$ 6,216.00
CAM2-1 TO CAM2-2	HD quality PTZ camera, USB connection, mount, 10' USB cable (USB extender required) IR control only	Logitech	PTZ Pro Camera					2	$ 789.00	$ 1,578.00
WMRX1-1 TO WMRX1-2	Wireless Microphone System with hand held Mic	Shure	QLXD24/B58					2	$ 937.00	$ 1,874.00
WMRX2-1 TO WMRX2-2	Wireless Microphone System with belt-pack & lapel Mic	Shure	QLXD14/83					2	$ 935.00	$ 1,870.00
DSP1-1 TO DSP1-2	Digital Signal Processor	Biamp	TesiraForte AVB AI					2	$ 1,664.00	$ 3,328.00
CMIC1-1 TO CMIC1-8	Microflex, ceilinng mic, cardiod pick-up, pre-amp mounting plate, white	Shure	MX202WP/C					8	$ 158.00	$ 1,264.00

IRRX1-1 TO IRRX1-2	Emitter panel for single, dual or multi channel use	Sennheiser	SZI1015-W					2	$ 833.00	$ 1,666.00
IRRX1-1 TO IRRX1-4	IR receiver	Sennheiser	EKI830					4	$ 173.00	$ 692.00
INLP1-1 TO INLP1-4	induction loops	Sennheiser	EZT3011					4	$ 56.00	$ 224.00
MOD1-1 TO MOD1-2	modulator	Sennheiser	SI1015					2	$ 772.00	$ 1,544.00
EPHN1-1 TO EPHN1-4	Single ear phone head set	Sennheiser	EP01-100					4	$ 18.00	$ 72.00
PWR2-1 TO PWR2-2	Power Distribution/Surge, 9 outlet, 20 Amp	Furman	PL-8 Pro C					2	$ 300.00	$ 600.00
DWR1-1 TO DWR1-2	2RU utility drawer	Middle Atlantic	UD2					2	$ 95.00	$ 190.00
WKBMS1-1 TO WKBMS1-2	RF Wireless keyboard & optical mouse, 50' range minimum (for OFE PC for Skype calls)	Wireless Computing	RF-412					2	$ 200.00	$ 400.00
					ICRON	Ranger 2201	Single port Cat 5e 100 meter extender	2	$ 366.00	$ 732.00

Material Cost Sub-Total	$ 74,432.00
Estimated Tax	$6,183.03
Estimated Shipping	$755.86
Misc Materials	$2,100.00
Materials Sub-Total	$ 83,470.89
Estimated Labor, Installation, Training, Etc.	$ 22,655.85
TOTAL	$ 106,126.74

Bond No. CSBA-3083

BIDDER'S BOND
(10% of the Total Bid Amount)

KNOW ALL PERSONS BY THESE PRESENTS:

That the undersigned, as Western A/V, A Corporation, as Principal ("Principal"),

and SureTec Insurance Company as Surety ("Surety"),

a corporation organized and existing under and by virtue of the laws of the State of *Texas and authorized to do business as a surety in the State of California, are held and bound unto the Orange County Fire Authority ("Authority") of Orange County, State of California as Obligee, in the sum of

Ten Percent of the Amount Bid Dollars ($) 10% of the Amount Bid

lawful money of the United States of America, for the payment of which sum well and truly to be made, we, and each of us, bind ourselves, our heirs, executors, administrators, successors, and assigns, jointly and severally, firmly by these presents.

THE CONDITION OF THIS OBLIGATION IS SUCH that whereas the Principal has submitted a bid to the Authority for all work specifically described in the accompanying bid;

NOW, THEREFORE, if the Principal is awarded the Project and, within the time and manner required under the Bid Documents, after the prescribed forms are presented to Principal for signature, enters into a written contract ("Agreement"), in the prescribed form in accordance with the bid, and files two bonds, one guaranteeing faithful performance and the other guaranteeing payment for labor and materials as required by law, and meets all other conditions to the contract between the Principal and the Obligee becoming effective, or if the Principal shall fully reimburse and save harmless the Obligee from any damage sustained by the Obligee through failure of the Principal to enter into the Agreement and to file the required performance and labor and material bonds, and to meet all other conditions to the Agreement between the Principal and the Obligee becoming effective, then this obligation shall be null and void; otherwise, it shall be and remain in full force and effect. The full payment of the sum stated above shall be due immediately if Principal fails to execute the Agreement within seven (7) days of the date of the Authority's Notice of Award to Principal.

Surety, for value received, hereby stipulates and agrees that no change, extension of time, alteration or addition to the terms of the Agreement or the call for bids, or to the work to be performed thereunder, or the specifications accompanying the same, shall in any way affect its obligation under this bond, and it does hereby waive notice of any such change, extension of time, alteration or addition to the terms of the Agreement or the call for bids, or to the work, or to the specifications.

In the event suit is brought upon this bond by the Obligee and judgment is recovered, the Surety shall pay all costs incurred by the Obligee in such suit, including a reasonable attorneys' fee to be fixed by the Court.

If the Authority awards the bid, the security of unsuccessful bidder(s) shall be returned within sixty (60) days from the time the award is made. Unless otherwise required by law, no bidder may withdraw its bid for ninety (90) days after the date of the bid opening.

IN WITNESS WHEREOF, this instrument has been duly executed by the Principal and Surety above named, on the 13th day of September, 2016.

(Affix Corporate Seal)

Western A/V, A Corporation

Principal

By

Jay Schelin - CFO

Print Name and Title of Signatory

(Affix Corporate Seal)

SureTec Insurance Company

Surety

By Shaunna Burchfiel, Attorney-in-Fact

Commercial Surety Bond Agency

Name of California Agent of Surety

1411 N. Batavia Street, Suite 201, Orange, CA 92867

Address of California Agent of Surety

(714) 516-1232

Telephone Number of California Agent of Surety

Bidder must attach Power of Attorney and Certificate of Authority for Surety and a Notarial Acknowledgment for all Surety's signatures. The California Department of Insurance must authorize the Surety to be an admitted Surety Insurer.

ACKNOWLEDGMENT

A notary public or other officer completing this certificate verifies only the identity of the individual who signed the document to which this certificate is attached, and not the truthfulness, accuracy, or validity of that document.

State of California
County of Orange)

On September 13, 2016 before me, Karen L. Ritto, Notary Public
(insert name and title of the officer)

personally appeared Jay Schellin,
who proved to me on the basis of satisfactory evidence to be the person(~~s~~) whose name(~~s~~) is/~~are~~ subscribed to the within instrument and acknowledged to me that he/~~she/they~~ executed the same in his/~~her/their~~ authorized capacity(~~ies~~), and that by his/~~her/their~~ signature(~~s~~) on the instrument the person(~~s~~), or the entity upon behalf of which the person(~~s~~) acted, executed the instrument.

I certify under PENALTY OF PERJURY under the laws of the State of California that the foregoing paragraph is true and correct.

WITNESS my hand and official seal.

KAREN L. RITTO
COMM. #2138527
Notary Public-California
ORANGE COUNTY
My Comm. Expires Dec 30, 2019

Signature _____ **(Seal)**
Karen L. Ritto

CALIFORNIA ALL-PURPOSE ACKNOWLEDGMENT

A notary public or other officer completing this certificate verifies only the identity of the individual who signed the document to which this certificate is attached, and not the truthfulness, accuracy, or validity of that document.

STATE OF CALIFORNIA }

County of Orange

On September 13th, 2016 (Date) before me, Karen L. Ritto (Insert Name of Notary exactly as it appears on the official seal), Notary Public,

personally appeared Shaunna Burchfiel (Name(s) of Signer(s)),

who proved to me on the basis of satisfactory evidence to be the person(s) whose name(s) is/are subscribed to the within instrument and acknowledged to me that he/she/they executed the same in his/her/their authorized capacity(ies), and that by his/her/their signature(s) on the instrument the person(s), or the entity upon behalf of which the person(s) acted, executed the instrument.

I certify under PENALTY OF PERJURY under the laws of the State of California that the foregoing paragraph is true and correct.

Witness my hand and official seal.

Signature _____ Signature of Notary Public Karen L. Ritto

KAREN L. RITTO
COMM. #2136527
Notary Public-California
ORANGE COUNTY
My Comm. Expires Dec 30, 2019
FRS3

Place Notary Seal Above

OPTIONAL

Though the information below is not required by law, it may prove valuable to persons relying on the document and could prevent fraudulent removal and reattachment of the form to another document.

Description of Attached Document

Title or Type of Document: Bidder's Bond

Document Date: 09/13/2016 Number of Pages: Two

Signer(s) Other Than Named Above: _____

Capacity(ies) Claimed by Signer(s)

Signer's Name: Shaunna Burchfiel

- ☐ Individual
- ☐ Corporate Officer — Title(s): _____
- ☐ Partner ☐ Limited ☐ General
- ☑ Attorney in Fact
- ☐ Trustee
- ☐ Guardian or Conservator
- ☐ Other: _____

Signer is Representing: _____

RIGHT THUMBPRINT OF SIGNER
Top of thumb here

Signer's Name: _____

- ☐ Individual
- ☐ Corporate Officer — Title(s): _____
- ☐ Partner ☐ Limited ☐ General
- ☐ Attorney in Fact
- ☐ Trustee
- ☐ Guardian or Conservator
- ☐ Other: _____

Signer is Representing: _____

RIGHT THUMBPRINT OF SIGNER
Top of thumb here

Bond No. CSBA-3083

POA #: 510023

SureTec Insurance Company

LIMITED POWER OF ATTORNEY

Know All Men by These Presents, That SURETEC INSURANCE COMPANY (the "Company"), a corporation duly organized and existing under the laws of the State of Texas, and having its principal office in Houston, Harris County, Texas, does by these presents make, constitute and appoint

Arturo Ayala, Daniel Huckabay, Dwight Reilly, Andrew Waterbury, Shaunna Burchfiel, Michael Castaneda

its true and lawful Attorney-in-fact, with full power and authority hereby conferred in its name, place and stead, to execute, acknowledge and deliver any and all bonds, recognizances, undertakings or other instruments or contracts of suretyship to include waivers to the conditions of contracts and consents of surety for:

Fifteen Million and 00/100 Dollars ($15,000,000.00)

and to bind the Company thereby as fully and to the same extent as if such bond were signed by the President, sealed with the corporate seal of the Company and duly attested by its Secretary, hereby ratifying and confirming all that the said Attorney-in-Fact may do in the premises. Said appointment shall continue in force until 5/18/2017 and is made under and by authority of the following resolutions of the Board of Directors of the SureTec Insurance Company:

Be it Resolved, that the President, any Vice-President, any Assistant Vice-President, any Secretary or any Assistant Secretary shall be and is hereby vested with full power and authority to appoint any one or more suitable persons as Attorney(s)-in-Fact to represent and act for and on behalf of the Company subject to the following provisions:

Attorney-in-Fact may be given full power and authority for and in the name of and of behalf of the Company, to execute, acknowledge and deliver, any and all bonds, recognizances, contracts, agreements or indemnity and other conditional or obligatory undertakings and any and all notices and documents canceling or terminating the Company's liability thereunder, and any such instruments so executed by any such Attorney-in-Fact shall be binding upon the Company as if signed by the President and sealed and effected by the Corporate Secretary.

Be it Resolved, that the signature of any authorized officer and seal of the Company heretofore or hereafter affixed to any power of attorney or any certificate relating thereto by facsimile, and any power of attorney or certificate bearing facsimile signature or facsimile seal shall be valid and binding upon the Company with respect to any bond or undertaking to which it is attached. *(Adopted at a meeting held on 20th of April, 1999.)*

In Witness Whereof, SURETEC INSURANCE COMPANY has caused these presents to be signed by its President, and its corporate seal to be hereto affixed this 8th day of March, A.D. 2016

SURETEC INSURANCE COMPANY

By: _____

John Knox Jr., President

State of Texas ss:
County of Harris

On this 8th day of March, A.D. 2016 before me personally came John Knox Jr., to me known, who, being by me duly sworn, did depose and say, that he resides in Houston, Texas, that he is President of SURETEC INSURANCE COMPANY, the company described in and which executed the above instrument; that he knows the seal of said Company; that the seal affixed to said instrument is such corporate seal; that it was so affixed by order of the Board of Directors of said Company; and that he signed his name thereto by like order.

JACQUELYN MALDONADO
Notary Public
State of Texas
My Comm. Exp. 5/18/2017

Jacquelyn Maldonado, Notary Public
My commission expires May 18, 2017

I, M. Brent Beaty, Assistant Secretary of SURETEC INSURANCE COMPANY, do hereby certify that the above and foregoing is a true and correct copy of a Power of Attorney, executed by said Company, which is still in full force and effect; and furthermore, the resolutions of the Board of Directors, set out in the Power of Attorney are in full force and effect.

Given under my hand and the seal of said Company at Houston, Texas this 13th day of September, 2016, A.D.

M. Brent Beaty, Assistant Secretary

Any instrument issued in excess of the penalty stated above is totally void and without any validity.
For verification of the authority of this power you may call (713) 812-0800 any business day between 8:00 am and 5:00 pm CST.

STATE OF CALIFORNIA

DEPARTMENT OF INSURANCE № 08138

SAN FRANCISCO

Certificate of Authority

THIS IS TO CERTIFY *THAT, Pursuant to the Insurance Code of the State of California,*

SureTec Insurance Company

of Texas *, organized under the laws of* Texas *, subject to its Articles of Incorporation or other fundamental organizational documents, is hereby authorized to transact within the State, subject to all provisions of this Certificate, the following classes of insurance:*

Surety

as such classes are now or may hereafter be defined in the Insurance Laws of the State of California.

THIS CERTIFICATE *is expressly conditioned upon the holder hereof now and hereafter being in full compliance with all, and not in violation of any, of the applicable laws and lawful requirements made under authority of the laws of the State of California as long as such laws or requirements are in effect and applicable, and as such laws and requirements now are, or may hereafter be changed or amended.*

IN WITNESS WHEREOF, *effective as of the* 24th *day of* October, 2005, *I have hereunto set my hand and caused my official seal to be affixed this* 24th *day of* October, 2005.

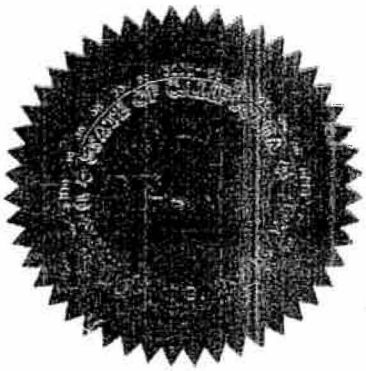

John Garamendi
Insurance Commissioner

By Patricia K. Staggs

Patricia K. Staggs
for Richard D. Baum
Chief Deputy

NOTICE:
Qualification with the Secretary of State must be accomplished as required by the California Corporations Code promptly after issuance of this Certificate of Authority. Failure to do so will be a violation of Insurance Code Section 701 and will be grounds for revoking this Certificate of Authority pursuant to the convenants made in the application therefor and the conditions contained herein.

FORM CP-3

OSP 00 39391

Bond No. 5222144
Premium: $8,623.00
Issued in two (2) original counterparts.

THE FINAL PREMIUM IS PREDICATED ON THE FINAL CONTRACT AMOUNT

FAITHFUL PERFORMANCE BOND

(100% of Agreement Price)

(Note: Bidders must use this form, NOT a surety company form)

KNOW ALL PERSONS BY THESE PRESENTS:

WHEREAS, the governing board ("Board") of the Orange County Fire Authority, ("Authority") and Western A/V, a Corporation ("Principal)" have entered into a contract for the furnishing of all materials and labor, services and transportation, necessary, convenient, and proper to perform the following project:

IFB RO2155 – Audio/Visual Systems Upgrade at RFOTC

("Contract") which Contract dated [DATE], *September 28th, 2016 and all of the Bid Documents attached to or forming a part of the Contract, are hereby referred to and made a part hereof; and

WHEREAS, said Principal is required under the terms of the Contract to furnish a bond for the faithful performance of the Contract.

NOW, THEREFORE, the Principal and SureTec Insurance Company ("Surety") are held and firmly bound unto the Board of the Authority in the penal sum of [WRITE OUT AMOUNT] DOLLARS ($[AMOUNT]), **Five Hundred Twelve Thousand, Two Hundred Ninety-Six and 52/100 Dollars ($512,296.52) lawful money of the United States, for the payment of which sum well and truly to be made we bind ourselves, our heirs, executors, administrators, successors, and assigns jointly and severally, firmly by these presents, to:

- Perform all the work required to complete the Project; and
- Pay to the Authority all damages the Authority incurs as a result of the Principal's failure to perform all the work required to complete the Project.

The condition of the obligation is such that, if the above bounden Principal, his or its heirs, executors, administrators, successors, or assigns, shall in all things stand to and abide by, and well and truly keep and perform the covenants, conditions, and agreements in the Contract and any alteration thereof made as therein provided, on his or its part to be kept and performed at the time and in the intent and meaning, including all contractual guarantees and warrantees of materials and workmanship, and shall indemnify and save harmless the Authority, its trustees, officers and agents, as therein stipulated, then this obligation shall become null and void, otherwise it shall be and remain in full force and virtue.

As a condition precedent to the satisfactory completion of the Contract, the above obligation shall hold good for a period equal to the warranty and/or guarantee period of the Contract, during which time Surety's obligation shall continue if Contractor shall fail to make full, complete, and satisfactory repair and replacements and totally protect the Authority from loss or damage resulting from or caused by defective materials or faulty workmanship. The obligations of Surety hereunder shall continue so long as any obligation of Contractor remains. Nothing herein shall limit the Authority's rights or the Contractor or Surety's obligations under the Contract, law or equity, including, but not limited to, California Code of Civil Procedure section 337.15.

The Surety, for value received, hereby stipulates and agrees that no change, extension of time, alteration, or addition to the terms of the contract or to the work to be performed thereunder or the specifications accompanying the same shall in any way affect its obligation on this bond, and it does hereby waive notice of any such change, extension of time, alteration, or addition to the terms of the Contract or to the work or to the specifications.

IN WITNESS WHEREOF, two (2) identical counterparts of this instrument, each of which shall for all purposes be deemed an original thereof, have been duly executed by the Principal and Surety above named, on the 28th day of September, 2016.

(Affix Corporate Seal)

Western A/V, a Corporation
Principal

By

Jay Scherrin - CFO
Print Name and Title of Signatory

(Affix Corporate Seal)

SureTec Insurance Company
Surety

By Shaunna Burchfiel, Attorney-in-Fact

Commercial Surety Bond Agency
Name of California Agent of Surety

1411 N. Batavia Street, Suite 201, Orange, CA 92867
Address of California Agent of Surety

(714) 516-1232
Telephone Number of California Agent of Surety

Bidder must attach Power of Attorney and Certificate of Authority for Surety and a Notarial Acknowledgment for all Surety's signatures. The California Department of Insurance must authorize the Surety to be an admitted Surety Insurer.

CALIFORNIA ALL-PURPOSE ACKNOWLEDGMENT

A notary public or other officer completing this certificate verifies only the identity of the individual who signed the document to which this certificate is attached, and not the truthfulness, accuracy, or validity of that document.

STATE OF CALIFORNIA }

County of Orange

On September 28th, 2016 (Date) before me, Rudy Urieta (Insert Name of Notary exactly as it appears on the official seal), Notary Public,

personally appeared Shaunna Burchfiel (Name(s) of Signer(s)),

who proved to me on the basis of satisfactory evidence to be the person(s) whose name(s) is/are subscribed to the within instrument and acknowledged to me that he/she/they executed the same in his/her/their authorized capacity(ies), and that by his/her/their signature(s) on the instrument the person(s), or the entity upon behalf of which the person(s) acted, executed the instrument.

I certify under PENALTY OF PERJURY under the laws of the State of California that the foregoing paragraph is true and correct.

Witness my hand and official seal.

Signature _____ Signature of Notary Public Rudy Urieta

RUDY URIETA
COMM. #2159828
Notary Public-California
ORANGE COUNTY
My Comm. Expires Jul 14, 2020
FRS3

Place Notary Seal Above

OPTIONAL

Though the information below is not required by law, it may prove valuable to persons relying on the document and could prevent fraudulent removal and reattachment of the form to another document.

Description of Attached Document

Title or Type of Document: Faithful Performance Bond

Document Date: 09/28/2016 Number of Pages: Two

Signer(s) Other Than Named Above: _____

Capacity(ies) Claimed by Signer(s)

Signer's Name: Shaunna Burchfiel
- ☐ Individual
- ☐ Corporate Officer — Title(s): _____
- ☐ Partner ☐ Limited ☐ General
- ☑ Attorney in Fact
- ☐ Trustee
- ☐ Guardian or Conservator
- ☐ Other: _____

Signer is Representing: _____

RIGHT THUMBPRINT OF SIGNER
Top of thumb here

Signer's Name: _____
- ☐ Individual
- ☐ Corporate Officer — Title(s): _____
- ☐ Partner ☐ Limited ☐ General
- ☐ Attorney in Fact
- ☐ Trustee
- ☐ Guardian or Conservator
- ☐ Other: _____

Signer is Representing: _____

RIGHT THUMBPRINT OF SIGNER
Top of thumb here

Bond No. 5222144

POA #: 510023

SureTec Insurance Company

LIMITED POWER OF ATTORNEY

Know All Men by These Presents, That SURETEC INSURANCE COMPANY (the "Company"), a corporation duly organized and existing under the laws of the State of Texas, and having its principal office in Houston, Harris County, Texas, does by these presents make, constitute and appoint

Arturo Ayala, Daniel Huckabay, Dwight Reilly, Andrew Waterbury, Shaunna Burchfiel, Michael Castaneda

its true and lawful Attorney-in-fact, with full power and authority hereby conferred in its name, place and stead, to execute, acknowledge and deliver any and all bonds, recognizances, undertakings or other instruments or contracts of suretyship to include waivers to the conditions of contracts and consents of surety for:

Fifteen Million and 00/100 Dollars ($15,000,000.00)

and to bind the Company thereby as fully and to the same extent as if such bond were signed by the President, sealed with the corporate seal of the Company and duly attested by its Secretary, hereby ratifying and confirming all that the said Attorney-in-Fact may do in the premises. Said appointment shall continue in force until 5/18/2017 and is made under and by authority of the following resolutions of the Board of Directors of the SureTec Insurance Company:

Be it Resolved, that the President, any Vice-President, any Assistant Vice-President, any Secretary or any Assistant Secretary shall be and is hereby vested with full power and authority to appoint any one or more suitable persons as Attorney(s)-in-Fact to represent and act for and on behalf of the Company subject to the following provisions:

Attorney-in-Fact may be given full power and authority for and in the name of and of behalf of the Company, to execute, acknowledge and deliver, any and all bonds, recognizances, contracts, agreements or indemnity and other conditional or obligatory undertakings and any and all notices and documents canceling or terminating the Company's liability thereunder, and any such instruments so executed by any such Attorney-in-Fact shall be binding upon the Company as if signed by the President and sealed and effected by the Corporate Secretary.

Be it Resolved, that the signature of any authorized officer and seal of the Company heretofore or hereafter affixed to any power of attorney or any certificate relating thereto by facsimile, and any power of attorney or certificate bearing facsimile signature or facsimile seal shall be valid and binding upon the Company with respect to any bond or undertaking to which it is attached. *(Adopted at a meeting held on 20th of April, 1999.)*

In Witness Whereof, SURETEC INSURANCE COMPANY has caused these presents to be signed by its President, and its corporate seal to be hereto affixed this 8th day of March, A.D. 2016

SURETEC INSURANCE COMPANY

By: _____

John Knox Jr., President

State of Texas ss:
County of Harris

On this 8th day of March, A.D. 2016 before me personally came John Knox Jr., to me known, who, being by me duly sworn, did depose and say, that he resides in Houston, Texas, that he is President of SURETEC INSURANCE COMPANY, the company described in and which executed the above instrument; that he knows the seal of said Company; that the seal affixed to said instrument is such corporate seal; that it was so affixed by order of the Board of Directors of said Company; and that he signed his name thereto by like order.

JACQUELYN MALDONADO
Notary Public
State of Texas
My Comm. Exp. 5/18/2017

Jacquelyn Maldonado, Notary Public
My commission expires May 18, 2017

I, M. Brent Beaty, Assistant Secretary of SURETEC INSURANCE COMPANY, do hereby certify that the above and foregoing is a true and correct copy of a Power of Attorney, executed by said Company, which is still in full force and effect; and furthermore, the resolutions of the Board of Directors, set out in the Power of Attorney are in full force and effect.

Given under my hand and the seal of said Company at Houston, Texas this 28th day of September, 2016, A.D.

M. Brent Beaty, Assistant Secretary

Any instrument issued in excess of the penalty stated above is totally void and without any validity.
For verification of the authority of this power you may call (713) 812-0800 any business day between 8:00 am and 5:00 pm CST.

Bond No. 5222144
Issued in two (2)
original counterparts.

THE FINAL PREMIUM IS
PREDICATED ON THE
FINAL CONTRACT AMOUNT

PAYMENT BOND

Contractor's Labor & Material Bond

(100% of Contract Price)

(Note: Bidders must use this form, NOT a surety company form)

KNOW ALL PERSONS BY THESE PRESENTS:

WHEREAS, the governing board ("Board") of the Orange County Fire Authority, ("Authority") and Western A/V, a Corporation, ("Principal)" have entered into a contract for the furnishing of all materials and labor, services and transportation, necessary, convenient, and proper to perform the following project:

IFB RO2155 – Audio/Visual Systems Upgrade at RFOTC

("Contract") which Contract dated [DATE], *September 28th, 2016 and all of the Bid Documents attached to or forming a part of the Contract, are hereby referred to and made a part hereof; and

WHEREAS, pursuant to law and the Contract, the Principal is required, before entering upon the performance of the work, to file a good and sufficient bond with the body by which the Contract is awarded in an amount equal to one hundred percent (100%) of the Contract price, to secure the claims to which reference is made in sections 9000 through 9510 and 9550 through 9566 of the Civil Code, and division 2, part 7, of the Labor Code.

NOW, THEREFORE, the Principal and SureTec Insurance Company ("Surety") are held and firmly bound unto all laborers, material men, and other persons referred to in said statutes in the sum of [WRITE OUT AMOUNT] DOLLARS ($[AMOUNT]), **lawful money of the United States, being a sum not less than the total amount payable by the terms of Contract, for the payment of which sum well and truly to be made, we bind ourselves, our heirs, executors, administrators, successors, or assigns, jointly and severally, by these presents. **Five Hundred Twelve Thousand, Two Hundred Ninety-Six and 52/100 Dollars ($512,296.52)

The condition of this obligation is that if the Principal or any of his or its subcontractors, of the heirs, executors, administrators, successors, or assigns of any, all, or either of them shall fail to pay for any labor, materials, provisions, provender, or other supplies, used in, upon, for or about the performance of the work contracted to be done, or for any work or labor thereon of any kind, or for amounts required to be deducted, withheld, and paid over to the Employment Development Department from the wages of employees of the Principal or any of his or its subcontractors of any tier under Section 13020 of the Unemployment Insurance Code with respect to such work or labor, that the Surety will pay the same in an amount not exceeding the amount herein above set forth, and also in case suit is brought upon this bond, will pay a reasonable attorney's fee to be awarded and fixed by the Court, and to be taxed as costs and to be included in the judgment therein rendered.

It is hereby expressly stipulated and agreed that this bond shall inure to the benefit of any and all persons, companies, and corporations entitled to file claims under section 9100 of the Civil Code, so as to give a right of action to them or their assigns in any suit brought upon this bond.

Should the condition of this bond be fully performed, then this obligation shall become null and void; otherwise it shall be and remain in full force and affect.

And the Surety, for value received, hereby stipulates and agrees that no change, extension of time, alteration, or addition to the terms of Contract or the specifications accompanying the same shall in any

manner affect its obligations on this bond, and it does hereby waive notice of any such change, extension, alteration, or addition.

IN WITNESS WHEREOF, two (2) identical counterparts of this instrument, each of which shall for all purposes be deemed an original thereof, have been duly executed by the Principal and Surety above named, on the 28th day of September, 2016.

(Affix Corporate Seal)

Western A/V, a Corporation
Principal

By

JAY SCHERLIN – CFO
Print Name and Title of Signatory

(Affix Corporate Seal)

SureTec Insurance Company
Surety

By Shaunna Burchfiel, Attorney-in-Fact

Commerical Surety Bond Agency
Name of California Agent of Surety

1411 N. Batavia Street, Suite 201, Orange, CA 92867
Address of California Agent of Surety

(714) 516-1232
Telephone Number of California Agent of Surety

Bidder must attach Power of Attorney and Certificate of Authority for Surety and a Notarial Acknowledgment for all Surety's signatures. The California Department of Insurance must authorize the Surety to be an admitted Surety Insurer.

CALIFORNIA ALL-PURPOSE ACKNOWLEDGMENT

A notary public or other officer completing this certificate verifies only the identity of the individual who signed the document to which this certificate is attached, and not the truthfulness, accuracy, or validity of that document.

STATE OF CALIFORNIA

County of Orange }

On September 28th, 2016 (Date) before me, Rudy Urieta (Insert Name of Notary exactly as it appears on the official seal), Notary Public,

personally appeared Shaunna Burchfiel (Name(s) of Signer(s)),

who proved to me on the basis of satisfactory evidence to be the person(s) whose name(s) is/are subscribed to the within instrument and acknowledged to me that he/she/they executed the same in his/her/their authorized capacity(ies), and that by his/her/their signature(s) on the instrument the person(s), or the entity upon behalf of which the person(s) acted, executed the instrument.

I certify under PENALTY OF PERJURY under the laws of the State of California that the foregoing paragraph is true and correct.

Witness my hand and official seal.

Signature _____
Signature of Notary Public Rudy Urieta

RUDY URIETA
COMM. #2159828
Notary Public-California
ORANGE COUNTY
My Comm. Expires Jul 14, 2020
FRS3

Place Notary Seal Above

OPTIONAL

Though the information below is not required by law, it may prove valuable to persons relying on the document and could prevent fraudulent removal and reattachment of the form to another document.

Description of Attached Document

Title or Type of Document: Payment Bond

Document Date: 09/28/2016 Number of Pages: Two

Signer(s) Other Than Named Above: _____

Capacity(ies) Claimed by Signer(s)

Signer's Name: Shaunna Burchfiel
- ☐ Individual
- ☐ Corporate Officer — Title(s): _____
- ☐ Partner ☐ Limited ☐ General
- ☑ Attorney in Fact
- ☐ Trustee
- ☐ Guardian or Conservator
- ☐ Other: _____

Signer is Representing: _____

RIGHT THUMBPRINT OF SIGNER
Top of thumb here

Signer's Name: _____
- ☐ Individual
- ☐ Corporate Officer — Title(s): _____
- ☐ Partner ☐ Limited ☐ General
- ☐ Attorney in Fact
- ☐ Trustee
- ☐ Guardian or Conservator
- ☐ Other: _____

Signer is Representing: _____

RIGHT THUMBPRINT OF SIGNER
Top of thumb here

Bond No. 5222144

POA #: 510023

SureTec Insurance Company

LIMITED POWER OF ATTORNEY

Know All Men by These Presents, That SURETEC INSURANCE COMPANY (the "Company"), a corporation duly organized and existing under the laws of the State of Texas, and having its principal office in Houston, Harris County, Texas, does by these presents make, constitute and appoint

Arturo Ayala, Daniel Huckabay, Dwight Reilly, Andrew Waterbury, Shaunna Burchfiel, Michael Castaneda

its true and lawful Attorney-in-fact, with full power and authority hereby conferred in its name, place and stead, to execute, acknowledge and deliver any and all bonds, recognizances, undertakings or other instruments or contracts of suretyship to include waivers to the conditions of contracts and consents of surety for:

Fifteen Million and 00/100 Dollars ($15,000,000.00)

and to bind the Company thereby as fully and to the same extent as if such bond were signed by the President, sealed with the corporate seal of the Company and duly attested by its Secretary, hereby ratifying and confirming all that the said Attorney-in-Fact may do in the premises. Said appointment shall continue in force until 5/18/2017 and is made under and by authority of the following resolutions of the Board of Directors of the SureTec Insurance Company:

Be it Resolved, that the President, any Vice-President, any Assistant Vice-President, any Secretary or any Assistant Secretary shall be and is hereby vested with full power and authority to appoint any one or more suitable persons as Attorney(s)-in-Fact to represent and act for and on behalf of the Company subject to the following provisions:

Attorney-in-Fact may be given full power and authority for and in the name of and of behalf of the Company, to execute, acknowledge and deliver, any and all bonds, recognizances, contracts, agreements or indemnity and other conditional or obligatory undertakings and any and all notices and documents canceling or terminating the Company's liability thereunder, and any such instruments so executed by any such Attorney-in-Fact shall be binding upon the Company as if signed by the President and sealed and effected by the Corporate Secretary.

Be it Resolved, that the signature of any authorized officer and seal of the Company heretofore or hereafter affixed to any power of attorney or any certificate relating thereto by facsimile, and any power of attorney or certificate bearing facsimile signature or facsimile seal shall be valid and binding upon the Company with respect to any bond or undertaking to which it is attached. *(Adopted at a meeting held on 20th of April, 1999.)*

In Witness Whereof, SURETEC INSURANCE COMPANY has caused these presents to be signed by its President, and its corporate seal to be hereto affixed this 8th day of March, A.D. 2016

SURETEC INSURANCE COMPANY

By: _____

John Knox Jr., President

State of Texas ss:
County of Harris

On this 8th day of March, A.D. 2016 before me personally came John Knox Jr., to me known, who, being by me duly sworn, did depose and say, that he resides in Houston, Texas, that he is President of SURETEC INSURANCE COMPANY, the company described in and which executed the above instrument; that he knows the seal of said Company; that the seal affixed to said instrument is such corporate seal; that it was so affixed by order of the Board of Directors of said Company; and that he signed his name thereto by like order.

JACQUELYN MALDONADO
Notary Public
State of Texas
My Comm. Exp. 5/18/2017

Jacquelyn Maldonado, Notary Public
My commission expires May 18, 2017

I, M. Brent Beaty, Assistant Secretary of SURETEC INSURANCE COMPANY, do hereby certify that the above and foregoing is a true and correct copy of a Power of Attorney, executed by said Company, which is still in full force and effect; and furthermore, the resolutions of the Board of Directors, set out in the Power of Attorney are in full force and effect.

Given under my hand and the seal of said Company at Houston, Texas this 28th day of September, 2016, A.D.

M. Brent Beaty, Assistant Secretary

Any instrument issued in excess of the penalty stated above is totally void and without any validity.
For verification of the authority of this power you may call (713) 812-0800 any business day between 8:00 am and 5:00 pm CST.

STATE OF CALIFORNIA

DEPARTMENT OF INSURANCE **№ 08138**

SAN FRANCISCO

Certificate of Authority

THIS IS TO CERTIFY *THAT, Pursuant to the Insurance Code of the State of California,*

SureTec Insurance Company

of Texas *, organized under the laws of* Texas *, subject to its Articles of Incorporation or other fundamental organizational documents, is hereby authorized to transact within the State, subject to all provisions of this Certificate, the following classes of insurance:*

Surety

as such classes are now or may hereafter be defined in the Insurance Laws of the State of California.

THIS CERTIFICATE *is expressly conditioned upon the holder hereof now and hereafter being in full compliance with all, and not in violation of any, of the applicable laws and lawful requirements made under authority of the laws of the State of California as long as such laws or requirements are in effect and applicable, and as such laws and requirements now are, or may hereafter be changed or amended.*

IN WITNESS WHEREOF, *effective as of the* 24th *day of* October, 2005, *I have hereunto set my hand and caused my official seal to be affixed this* 24th *day of* October, 2005.

John Garamendi
Insurance Commissioner

By

Patricia K. Staggs
for Richard D. Baum
Chief Deputy

NOTICE:

Qualification with the Secretary of State must be accomplished as required by the California Corporations Code promptly after issuance of this Certificate of Authority. Failure to do so will be a violation of Insurance Code Section 701 and will be grounds for revoking this Certificate of Authority pursuant to the convenants made in the application therefor and the conditions contained herein.

FORM CB-3

OSP 00 39391

5. LIST OF SUBCONTRACTORS

Bidder acknowledges and agrees that under Public Contract Code section 4100, et seq., it must clearly set forth below the name and location of each subcontractor who will perform work or labor or render service to the bidder in or about the construction of the work in an amount in excess of one-half of one percent (0.5%) of bidder's total bid and the kind of work that each will perform. Furthermore, bidder acknowledges and agrees that under Public Contract Code section 4100, et seq., if bidder fails to list any portion of work, or if bidder lists more than one subcontractor to perform the same portion of work (i.e. bidder must indicate what portion of the work each subcontractor will perform), bidder must perform that portion itself or be subjected to penalty under applicable law.

If alternate bids are called for and bidder intends to use subcontractors different from or in addition to those subcontractors listed for work under the base bid, bidder must list subcontractors that will perform work in an amount in excess of one half of one percent (0.5%) of bidder's total bid, including alternates.

In case more than one subcontractor is named for the same kind of work, the Contractor is to state the portion of work that each subcontractor will perform. Bidders or suppliers of materials only do not need to be listed. If further space is required for the list of proposed subcontractors, additional sheets showing the required information, as indicated below, shall be attached hereto and made a part of this document.

Listed below is the name of each subcontractor that will perform work, labor, or render services to the undersigned related to the construction work of this project. This is to include any subcontractor that will specially fabricate and install a portion of work according to detailed drawings contained in the plans and specifications in the amount greater than one half of one percent (.05%) of the contractors total bid.

Subcontractor Name _____ **Location** _____

Portion of Work/Trade _____

Bid Amount _____

Contractor's License Number DIR Number _____ _____

Subcontractor Name _____ **Location** _____

Portion of Work/Trade _____

Bid Amount _____

Contractor's License Number DIR Number _____ _____

Subcontractor Name _____ **Location** _____

Portion of Work/Trade _____

Bid Amount _____

Contractor's License Number DIR Number _____ _____

7. NON-COLLUSION DECLARATION

The undersigned declares:

I am the Sales Representative (Title) of Western A/V (Name of Contractor, Partnership, Corp.)

the party making the foregoing bid.

The bid is not made in the interest of, or on behalf of, any undisclosed person, partnership, company, association, organization, or corporation. The bid is genuine and not collusive or sham. The bidder has not directly or indirectly induced or solicited any other bidder to put in a false or sham bid. The bidder has not directly or indirectly colluded, conspired, connived, or agreed with any bidder or anyone else to put in a sham bid, or to refrain from bidding. The bidder has not in any manner, directly or indirectly, sought by agreement, communication, or conference with anyone to fix the bid price of the bidder or any other bidder, or to fix any overhead, profit, or cost element of the bid price, or of that of any other bidder. All statements contained in the bid are true. The bidder has not, directly or indirectly, submitted his or her bid price or any breakdown thereof, or the contents thereof, or divulged information or data relative thereto, to any corporation, partnership, company, association, organization, bid depository, or to any member or agent thereof, to effectuate a collusive or sham bid, and has not paid, and will not pay, any person or entity for such purpose.

Any person executing this declaration on behalf of a bidder that is a corporation, partnership, joint venture, limited liability company, limited liability partnership, or any other entity, hereby represents that he or she has full power to execute, and does execute, this declaration on behalf of the bidder.

I declare under penalty of perjury under the laws of the State of California that the foregoing is true and correct and that this declaration is executed on September 13, 2016 (date)

in

Orange, CA
(city & state)

Hailey M. Schellin
(Signature)

Hailey Schellin
(Print Name)

Sales Representative
(Title)

10. CERTIFICATION OF SITE EXAMINATION

Each bidder shall be fully informed of the conditions relating to the construction of the work and the employment of labor thereon. Failure to do so will not relieve Contractor or subcontractor of the obligation to furnish all material and labor necessary to carry out the provisions of the contract documents.

Each bidder shall examine the site for the work described herein. Bidders shall attend a mandatory pre-bid inspection of the building(s) and site(s), conducted by the OCFA, unless otherwise specified. Failure to attend the mandatory pre-bid inspection shall be cause for rejection of the bid.

The specifications for the work show conditions as they are believed to exist. The conditions shown do not constitute a representation or warranty express or implied by the OCFA, its officers or agents that such conditions actually exist.

Each bidder also certifies it has observed the designated Contractor work areas, material equipment storage areas, access routes, as well as the ability to protect existing surface and subsurface improvements. No claim for allowance of time or money will be allowed for such matters.

This is to certify that I have examined the site and the bid is complete and there will be no additional payment for failure to examine the site thoroughly.

Date of Site Examination 8/24/2016

Company Name Western A/V

Signature Hailey M. Schell

Printed Name/Title of Company Representative Hailey Schellin / Sales Representative

Date September 13, 2016

WORKER'S COMPENSATION INSURANCE CERTIFICATION

IFB RO2155 – Audio/Visual Systems Upgrade at RFOTC

Labor Code section 3700 in relevant part provides:

Every employer except the State shall secure the payment of compensation in one or more of the following ways:

a. By being insured against liability to pay compensation to one or more insurers duly authorized to write compensation insurance in this state.
b. By securing from the Director of Industrial Relations, a certificate of consent to self-insure, which may be given upon furnishing proof satisfactory to the Director of Industrial Relations of ability to self-insure and to pay any compensation that may become due to his employees.

I am aware of the provisions of Section 3700 of the Labor Code which requires every employer to be insured against liability for workers' compensation or to undertake self-insurance in accordance with the provisions of that Code, and I will comply with such provisions before commencing the performance of work of this contract.

Date 9/27/16

Legal Name of Contractor Western A/V

Signature Hailey Schellin

Print Name Hailey Schellin

Title Sales Representative

(In accordance with Article 5 - commencing at section 1860, chapter 1, part 7, division 2 of the Labor Code, the above certificate must be signed and filed with the awarding body prior to performing any work under this Contract.)

8. CERTIFICATION OF NON-DISCRIMINATION BY CONTRACTORS

Labor Code Section 1735 requires that no discrimination be made in the employment of persons upon public works because of the race, religious creed, color, national origin, ancestry, physical handicap, medical condition, marital status or sex of such persons, except as provided in Government Code Section 12940.

The firm listed below certifies that it does not discriminate in its employment with regard to the factors set forth in Labor Code Section 1735; that it is in compliance with all federal, state and local directives and executive orders regarding non-discrimination in employment; and that it agrees to demonstrate positively and aggressively the principle of equal employment opportunity in employment.

We agree specifically:

1. To establish or observe employment policies which affirmatively promote opportunities for minority persons at all job levels.
2. To communicate this policy to all persons concerned, including all company employees, outside recruiting services, especially those serving minority communities, and to the minority communities at large.
3. To take affirmative steps to hire minority employees within the company.

Company Name Western A/V

Signature Hailey M. Schellin

Printed Name/Title of Company Representative Hailey Schellin / Sales Representative

Date 9/13/2016

Please include any additional information available regarding equal opportunity employment programs now in effect within your company.

_____

_____

_____

_____

9. DEBARMENT AND SUSPENSION CERTIFICATION

TITLE 49, CODE OF FEDERAL REGULATIONS, PART 29

The Bidder, under penalty of perjury, certifies that, except as noted below, he/she or any other person associated therewith in the capacity of owner, partner, director, officer, manager:

- Is not currently under suspension, debarment, voluntary exclusion, or determination of ineligibility by any Federal agency;
- Has not been suspended, debarred, voluntarily excluded or determined ineligible by any Federal agency within the past 3 years;
- Does not have a proposed debarment pending; and
- Has not been indicted, convicted, or had a civil judgment rendered against it by a court of competent jurisdiction in any matter involving fraud or official misconduct within the past 3 years.

If there are any exceptions to this certification, insert the exceptions in the following space.

_____

_____

_____

_____

Exceptions will not necessarily result in denial of award, but will be considered in determining bidder responsibility. For any exception noted above, indicate below to whom it applies, initiating agency, and dates of action.

Note: Providing false information may result in criminal prosecution or administrative sanctions.

Company Name Western A/V

Signature Hailey M. Schellin

Printed Name/Title of Company Representative Hailey Schellin / Sales Representative

Date September 13, 2016

6. DESIGNATOR OF SURETIES

Provide the names, addresses and telephone numbers for all insurance brokers and sureties the Bidder intents to purchase insurance and bonds from.

Company Name COMMERCIAL SURETY

Address 1411 N. Batavia St, Suite 201, Orange, CA, 92867

Contact Name SHAUNNA BURCHFIEL E-Mail Address SHAUNNA@COMMERCIALSURETY.COM

Telephone Number 714-516-1232 Fax Number 714-516-9563

Bond or Insurance/Type BOND

Company Name _____

Address _____

Contact Name _____ E-Mail Address _____

Telephone Number _____ Fax Number _____

Bond or Insurance/Type _____

Company Name _____

Address _____

Contact Name _____ E-Mail Address _____

Telephone Number _____ Fax Number _____

Bond or Insurance/Type _____

Company Name _____

Address _____

Contact Name _____ E-Mail Address _____

Telephone Number _____ Fax Number _____

Bond or Insurance/Type _____

PREVAILING WAGE CERTIFICATION

IFB RO2155 – Audio/Visual Systems Upgrade at RFOTC

I hereby certify that I will conform to the State of California Public Works Contract requirements regarding prevailing wages, benefits, on-site audits with 48-hour notice, payroll records, and apprentice and trainee employment requirements, for all Services on the above Project, including, without limitation, the State labor compliance monitoring and enforcement by the Compliance Monitoring Unit of the Department of Industrial Relations, if this Project is subject to a labor compliance.

Date 9/27/16

Legal Name of Contractor Western A/V

Signature Hailey Schellin

Print Name Hailey Schellin

Title Sales Representative

ORANGE COUNTY FIRE AUTHORITY

RFP RO2155 – Addendum 1

Audio Visual Systems Upgrade at RFOTC

August 25, 2016

Thank you to all that attended the mandatory job walk meeting. As a result of questions received, this addendum is issued to provide additional information, and to extend the online Q&A period as requested.

Answers to questions during job walk:

1) **QUESTION:** Will the attendance sheet for the mandatory job-walk be provided?
   RESPONSE: Yes, it is attached as part of this Addendum.

2) **QUESTION:** Due to the nature of construction projects, rooms that are being upgraded will be unavailable for use for certain periods of time. Having available rooms for training and meetings may pose scheduling challenges. How will scheduling of any work that may cause interruptions as part of this project be coordinated?
   RESPONSE: Please submit a proposed schedule with your bid submittal. OCFA will provide additional detail to the awarded contractor and coordinate schedules and relocations as necessary.

3) **QUESTION:** During the job-walk OCFA staff indicated that routing for microphone and equipment cabling should be run under the tables and hidden from plain sight in the Board Room however this was not specified in the original plans. Please provide clarification.
   RESPONSE: Hidden cable routing under the tables is preferred. Please include the running and hiding of cabling under the tables in the Board Room along with the drilling of holes on the tables and installation of grommets for cable routing through each table with your bid.

4) **QUESTION:** The Q&A period on Planet Bids has closed. Can this be re-opened in order to vendors to ask additional questions as necessary?
   RESPONSE: Yes, the online Q&A has been reopened. Please submit your questions no later than September 7, 2016, 11:00 A.M. PST.

IMPORTANT: If you have submitted a proposal before this addendum was issued, your proposal will be invalidated. After you have reviewed the addendum, you must resubmit your proposal acknowledging receipt of this addendum through PlanetBids.

Please remember to submit all documents as listed in the Submittal Checklist

Thank you for your interest in doing business with OCFA.

Best Regards,

Rothchild Ong
Assistant Purchasing Agent

ORANGE COUNTY FIRE AUTHORITY
MEETING ATTENDANCE SHEET

Project: RO2155 – A/V Systems Upgrade at RFOTC	**Meeting Date/Time:** August 24, 2016 @ 10 AM
Facilitator: Rothchild Ong, Scott Tonelson - TK1SC	**Location: RFOTC; 1 Fire Authority Rd., Irvine, CA 92602**

Name	Company Name
John O'Donovan	**VMI Broadcast and AV Solutions**
Linda Jewitt	**Audio Associates**
Gena Barber	**PC Mall Gov**
Thomas Stravino	**Computer Network Support and Service**
Tim Mora	**American Electric Company**
Earl Barton	**American Electric Company**
Raffi Thomassian	**Minco Construction**
Peter Saad	**Minco Construction**
Greg Wilber	**IES Communications**
Andrew Bang	**EIDIM**
Hailey Schellin	**Western Audio Visual**
Evan Johnson	**Western Audio Visual**
Erik Wilson	**Western Audio Visual**
Dan Sheehy	**DNG – Digital Network Group**

ORANGE COUNTY FIRE AUTHORITY

RFP RO2155 – Addendum 2

Audio Visual Systems Upgrade at RFOTC

September 9, 2016

Thank you to all that submitted questions during the online Q&A period. As a result of questions received, this addendum is issued to provide an updated specifications and provide additional information as requested.

Updates to specifications:

OCFA is updating to the scope of work to change "optional" speaker replacements to "required" for the Board Room and classrooms. Cut sheets of requested speakers are also provided for reference.

Answers to questions during Online Q&A:

1) **QUESTION:** Are adding to/modifying existing drawings, or starting from scratch? If adding to/modifying, what the program was used?
   RESPONSE: AutoCAD was used with PDF backgrounds of the room floor plans and ceiling plans. The CAD drawings will be provided with the PDF backgrounds (without the Consultant's information) to the integrator to provide their drawings on in CAD format.

2) **QUESTION:** Section 1: Invitation for Bid presents the upgrades in 5 phases. However, the Proposed Schedule of Construction is separated by rooms not phases. Does the work in these spaces need to take place based on the phased schedule, with one phase being complete prior to beginning the next phase, or can the work described here overlap in scheduling?
   RESPONSE: "Phases" and "rooms" were used interchangeably in the bid documents. All room scheduling must be coordinated with OCFA staff to work around room usage. More than one room may be worked on as long as the rooms are complete, fully functional and completely tested with the control system before the room is released for use. The current priority is set to complete the Boardroom upgrades during the "closed" or "dark" days during the holiday season.

3) **QUESTION:** Sheet AV-200 shows two projection screens. Are both screens required to have the same image size?
   RESPONSE: The sheet AV-200 does not list the screen sizes, please refer to the AV bid document section 2.05/A/C and D for the screen information.

4) **QUESTION:** Where there may be discrepancies with discontinued items, is the manufacturer's suggested replacement acceptable?
   RESPONSE: If there are discontinued items, the manufacturer's suggested replacements will be acceptable; it should be noted on the response form that the equipment is a substitution due to the equipment being discontinued.

5) **QUESTION:** Is plenum rated cable required in any spaces for this project?
   RESPONSE: Yes, the new cables being installed must be plenum rated in all spaces.

6) **QUESTION:** What are the onsite working hours for the project?
RESPONSE: Normal working hours are Monday through Friday 7:00 A.M. to 5:00 P.M. After-hours availability may also be coordinated through the department as needed.

7) **QUESTION:** Will onsite storage space be made available?
RESPONSE: Onsite storage will not be available.

8) **QUESTION:** Are there any contractor parking restrictions?
RESPONSE: No, contractors are free to use any standard parking spaces that are available. Please refrain from using spaces marked for specific uses such as visitor or security parking.

9) **QUESTION:** Dais monitor cutouts are currently 16" wide. Is the intention for the new 20" monitors to remain outside of the cutout or is a new wider opening required for the monitors to recess back into the cavity? If so, who will be responsible for the dais fabrication?
RESPONSE: Per the specification sections 2.04/1/b and 2.05/A/1/f; the specified Dell 20" display or equal should have an adjustable stand (up and down) so the base can be placed in the existing cutouts in the Dais top, and to allow the display to be raised up to clear the Dais top. The Dais top will not be need to be modified.

IMPORTANT: If you have submitted a proposal before this addendum was issued, your proposal will be invalidated. After you have reviewed the addendum, you must resubmit your proposal acknowledging receipt of this addendum through PlanetBids.

Please remember to submit all documents as listed in the Submittal Checklist

Thank you for your interest in doing business with OCFA.

Best Regards,

Rothchild Ong
Assistant Purchasing Agent

Technical Data Sheet

AMS 6DC

Product description

The Tannoy AMS 6DC is a wide bandwidth, high power-handling and high sensitivity surface mount loudspeaker designed with an aesthetic that is perfect for the architectural considerations of building design. The elegantly styled moulded enclosures blend beautifully into any décor with custom colour available on special order. Additionally the AMS 6DC has undergone the most punishing environmental testing of any product in Tannoy's history – achieving an IP65 rating, which is among the highest in the industry for outdoor use.

Behind the unobtrusive, smoothly formed, weather-resistant zinc-plated nickel grilles and higher temperature polymer mouldings lies the technical heart of Tannoy's Dual Concentric Driver's revolutionary Omnimagnet™ technology and a unique patent-pending Torus Ogive Waveguide™ device. Together these innovations provide more consistent and controlled directivity along with improved high frequency response, as well as much improved time alignment and greater coherence between the low frequency and high frequency drivers.

This latest generation of Dual Concentrics have their genesis in many of the world's high end recording studios, with that classic signature Tannoy technology being used to mix and master a rich history of recording industry classics, including The Beatles' most treasured recordings in London's Abbey Road. By extension, the new AMS models ensure that playback of recorded material sounds exactly as the engineer intended when it was mixed in the studio, making them perfect for entertainment and hospitality venues, as well as areas where true sonic clarity and reliability is required.

The AMS range utilises a 16 ohm driver, making it ideal for use in high performance low-impedance systems (with optimized performance when used in conjunction with Lab.gruppen LUCIA amplifiers). Alternatively, for constant voltage systems, Tannoy have specified as standard, high quality low-insertion loss 60 W transformers featuring switching for taps at 60 W, 30 W and 15 W, with an additional 7.5 W tap for traditional systems.

Features

- Next-generation Dual Concentric driver featuring Omnimagnet technology
- Torus Ogive waveguide for improved broadband directivity
- 16-ohm drivers optimized for use with Lab.gruppen LUCIA amplifiers
- Yoke bracket included; optional any-angle accessory bracket available
- Weather resistant rated IP65 to EN60529 (IEC529)
- Thickened 5 mm high-temperature molded cabinets
- Custom color options

Applications

- Multi-zone foreground music and paging
- Boardrooms, offices and courtrooms
- Business music systems
- Airports, convention centres and hotels
- Auxiliary systems in houses of worship
- Lounges and bars
- Cruise ships

Physical data

Dimensions (H x W x D)**:**	364.8 x 230.0 x 268.8 mm, (14.36 x 9.05 x 10.58")
Net Weight:	6.08 kg (13.40 lbs)
Enclosure:	ABS
Finish:	Black or white

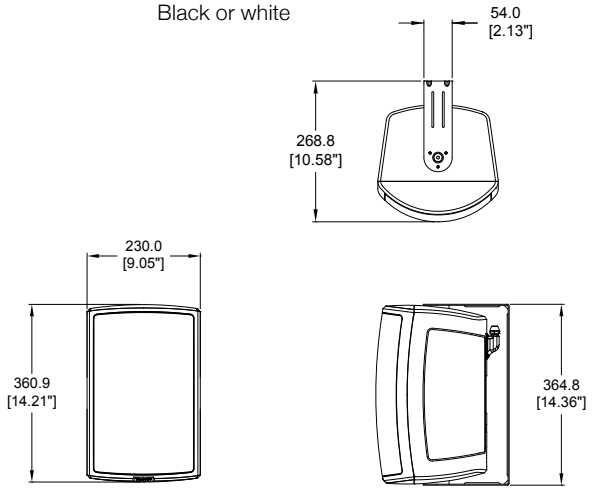

TANNOY®

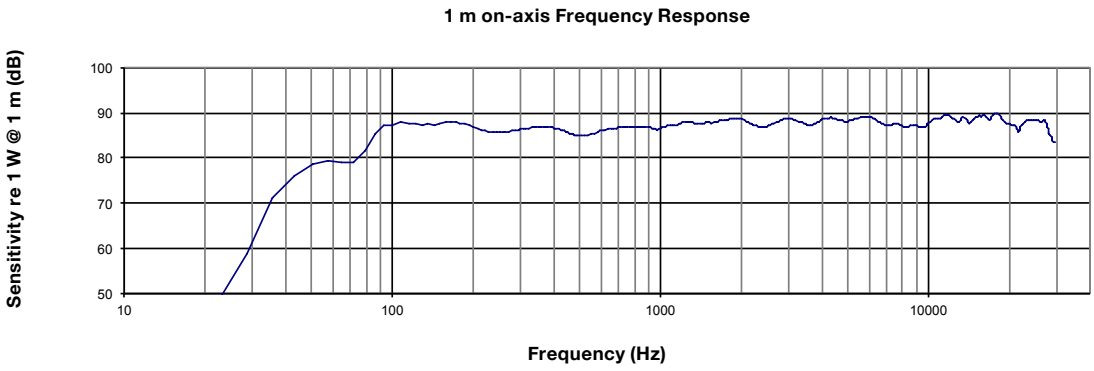

Anechoic Frequency Response

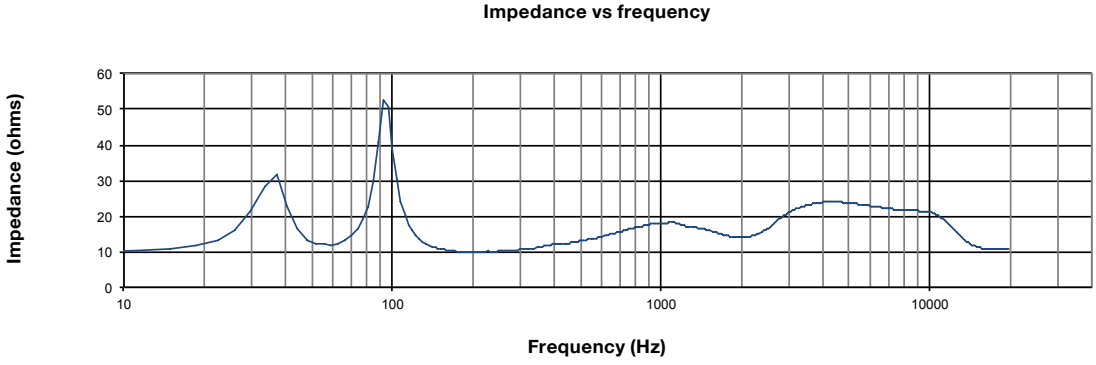

Impedance

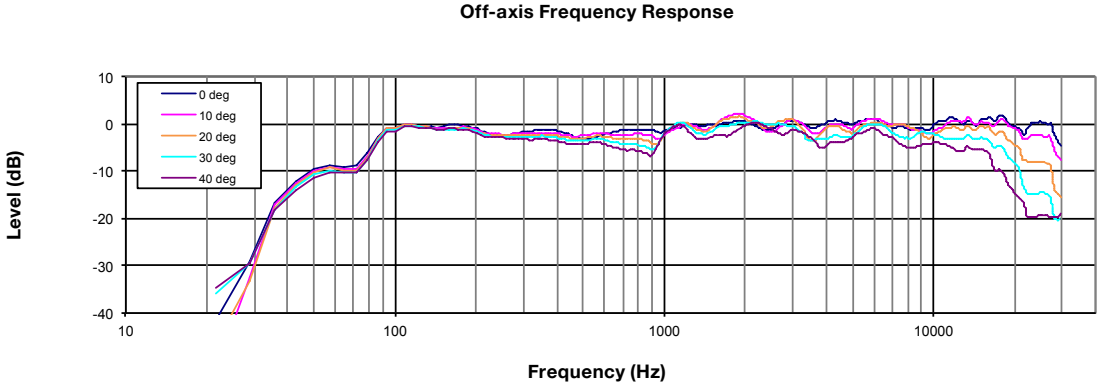

Off Axis Response

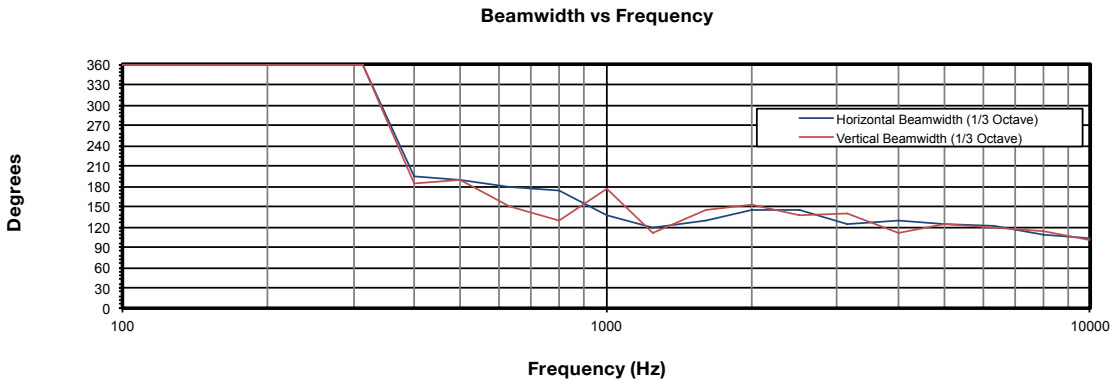

Beamwidth

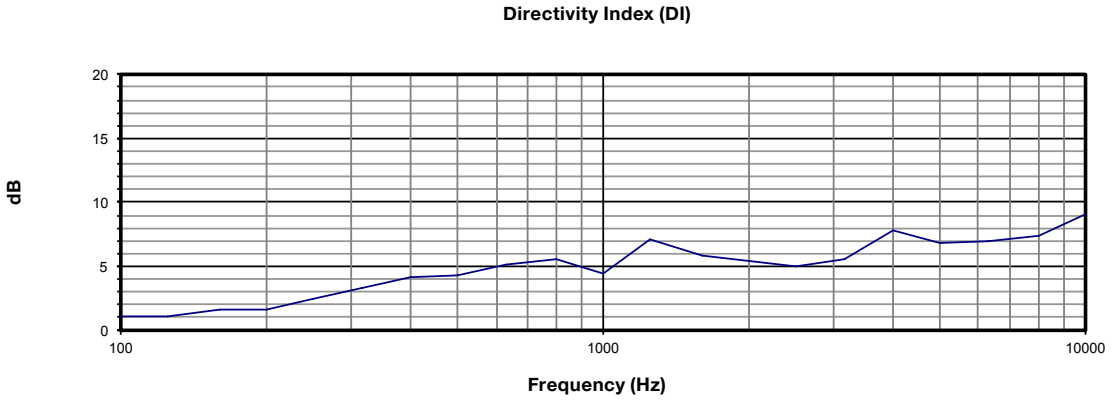

Directivity Index

Technical Data Sheet

Polar plots (1/3 octave)

AMS 6DC

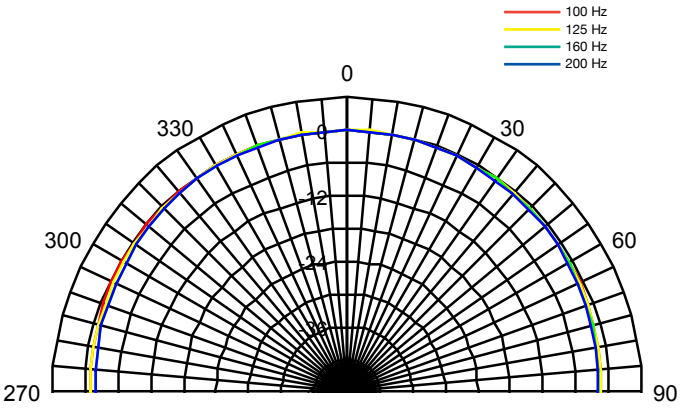

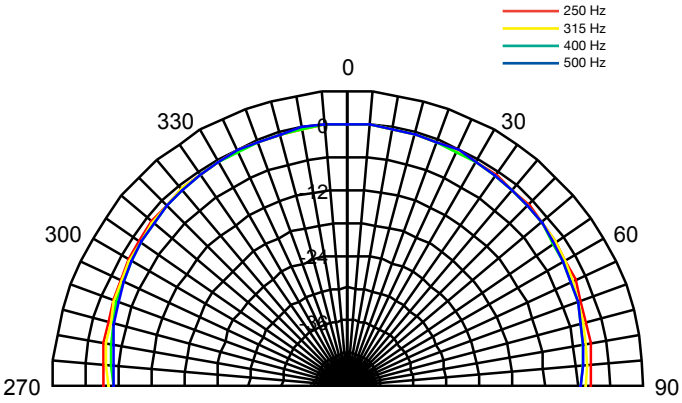

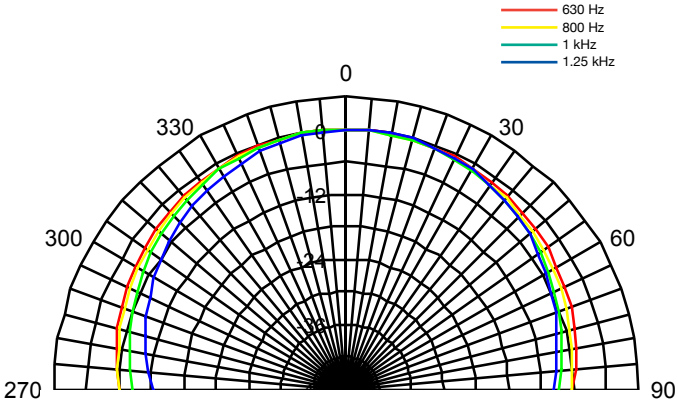

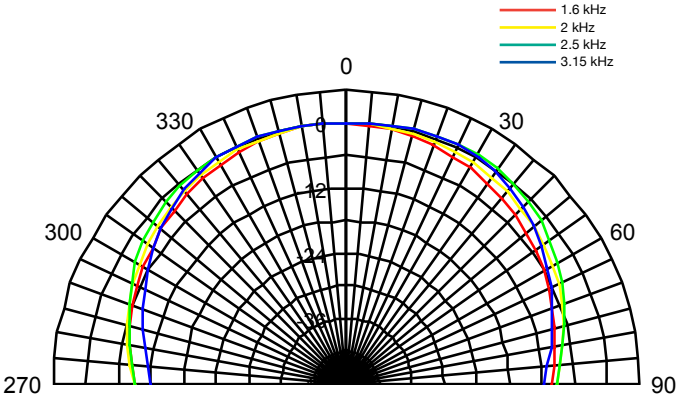

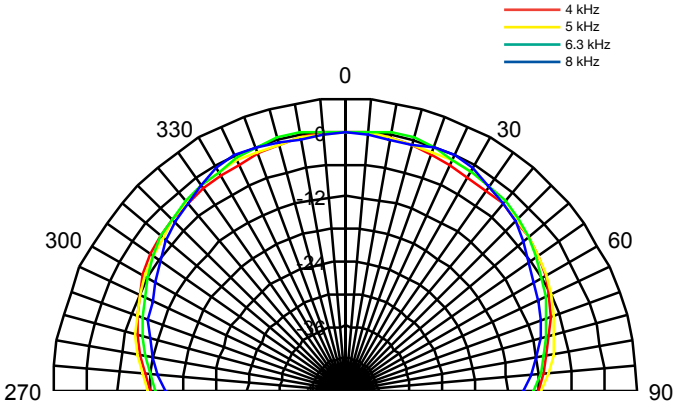

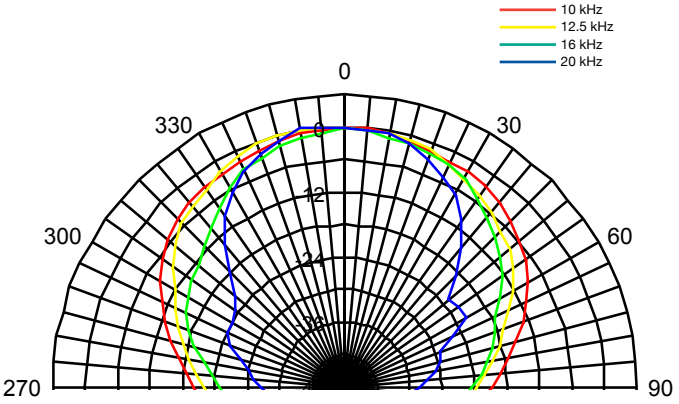

Technical Data Sheet

Specifications

AMS 6DC

Performance	
System	AMS 6DC
Frequency response (-3 dB) [1]	75 Hz - 30 kHz
Frequency range (-10 dB) [1]	55 Hz - 40 kHz
System sensitivity (1 W @ 1m) [2]	89 dB (1 W = 4 V for 16 ohms)
Nominal Coverage Angle	90 degrees conical
Power Handling [3]	
Average	80 W
Programme	160 W
Peak	320 W
Recommended Amplifier Power	160 W @ 16 ohms
Nominal Impedance (Lo, Z)	16 ohms
Rated maximum SPL	
Average	108 dB
Peak	114 dB
Transformer Taps (via front rotary switch)	
70 V	60 W / 30 W / 15 W / 7.5 W / OFF & Low impedance operation
100 V	60 W / 30 W / 15 W / OFF & Low impedance operation

Transducers	
Dual Concentric™ point source driver	1x 165 mm (6.50") Dual Concentric™ driver, using Omnimagnet technology
Low Frequency	44 mm (1.75") voice coil, treated multi fibre paper pulp cone
High Frequency	25 mm (1.00") PEI dome

Physical	
Enclosure	ABS
Grille	Steel, plated and painted
Connectors	Removable locking connector with screw terminals
Transformer setting	Rotary switch
Dimensions (H x W x D)	364.8 x 230.0 x 268.8 mm, (14.36 x 9.05 x 10.58")
Net Weight (ea)	6.08 kg (13.40 lbs)
Shipped weight	6.76 kg (14.90 lbs)
Included Accessories	Yoke bracket
Packed Quantity	2

Ordering Information

Part Number	Colour
8001 7970	Black
8001 7971	White

Notes:

1. Average over stated bandwidth. Measured in an IEC baffle in an Anechoic Chamber
2. Unweighted pink noise input, measured at 1 metre on axis
3. Long term power handling capacity as defined in EIA - 426B test

A full range of measurements, performance data, CLF and Ease™ Data for AMS 6DC can be downloaded from www.tannoypro.com.

Tannoy operates a policy of continuous research and development. The introduction of new materials or manufacturing methods will always equal or exceed the publishing specifications, which Tannoy reserves the right to alter without prior notice. Please verify the latest specifications when dealing with critical applications.

Copyright (c) 2015 Tannoy Limited. All rights reserved.

Technical Data Sheet

CMS 803DC BM

Features

- Advanced new Dual Concentric driver design utilizing Omnimagnet technology
- Torus Ogive Waveguide device for improved broadband directivity
- Improved time alignment and phase coherence, delivering even better sonic performance
- High power and high sensitivity with extended frequency response and very low distortion
- Improved LF performance for applications where genuine bottom-end is a must
- Low insertion-loss, 60 watt line transformer for a more powerful and dynamic performance
- Convenient front-tapping switch for settings
- Magnetically-adhering grille system for easy custom painting and optional Arco designer grilles for minimal architectural impact
- Five-clamp self-aligning system
- UV resistant baffle and grille
- Packaged with classic grille, tile rails and C-ring for quick and easy installation and simple stocking logistics

Applications

- Voice Alarm Systems
- Multizone Foreground Music & Paging Systems
- Boardrooms & Offices
- Business Music Systems
- Airports, Convention Centres, Hotels
- Reception / Waiting Rooms
- Houses of Worship
- Retail Outlets / Shopping Malls
- Lounges / Bars
- Cruise Ships
- Courtrooms

Product description

The Tannoy CMS 803DC BM is a full bandwidth, high power-handling and high sensitivity loudspeaker built around CMS 3.0 – the third generation of Tannoy's revolutionary Ceiling Monitor System technology. Based on an all-new evolution of Tannoy's proprietary Dual Concentric point-source driver, the CMS 803DC BM has been fundamentally re-engineered to deliver wider and more consistent broadband directivity, even greater intelligibility, and a more accurate and linear response.

The new Dual Concentric driver design features revolutionary Omnimagnet™ technology and unique patent-pending Torus Ogive Waveguide™ device, together providing more consistent and controlled directivity along with improved high frequency response. Improved time-alignment and greater coherence between LF and HF results in a wider sweet spot for enhanced performance both on- and off-axis. The re-designed baffle provides a subtle extension to the waveguide effect for additional sonic benefits.

The CMS 803DC BM also features extra clamp extension to accommodate thicker ceiling panels, and a locking design that prevents inadvertent over-screwing. Magnetic grille attachment enables easy removal and fitting for custom painting and tapping changes with grilles now available as either traditional style (inset in bezel) or new Arco™ style which conceals the entire unit for more architect-friendly aesthetic appeal.

The CMS 803DC BM utilizes a 16 ohm driver, making it ideal for use in high performance low-impedance systems (with optimized performance when used in conjunction with Lab.gruppen LUCIA amplifiers). A low-insertion loss 60 W transformer is included, with convenient front bezel switching for taps at 60 W, 30 W and 15 W, with an additional 7.5 W tap for traditional constant voltage systems.

The CMS 803DC BM is supplied with an integral zinc plated steel back-can, ready to install as a single unit and feature an integrated, recessed termination box. The removable locking connector has screw terminals for secure wire termination and loop-thru facility. Strain relief is provided by a clamping mechanism for use with plenum-rated cable or conduit, while new spring-loaded and self-aligning clamps make for even quicker and easier installation. All models are supplied with classic grille, two tile support rails and one C-ring; Arco grille and plaster (mud) ring are available as optional accessories.

Physical data

Bezel diameter:	319.0 mm (12.56")	**Hole Cutout Diameter:**	295.0 mm (11.61")
Front of ceiling to rear of backcan:	310.5 mm (12.22")	**Front of ceiling to top of safety loop:**	327.7 mm (12.90")

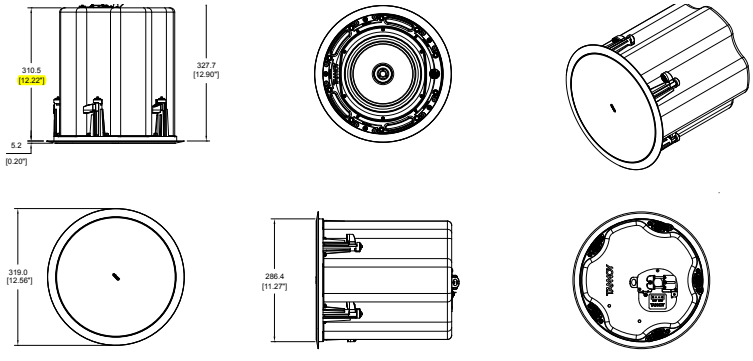

TANNOY

Technical Data Sheet

Performance measurements

CMS 803DC BM

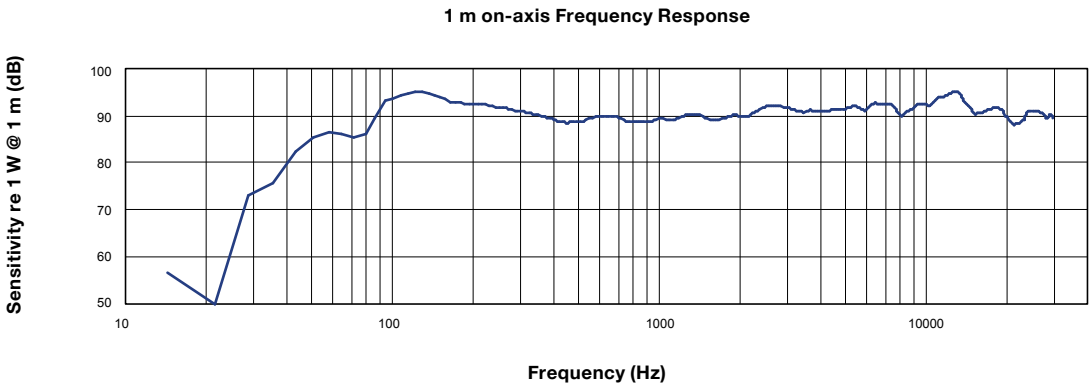

Anechoic Frequency Response

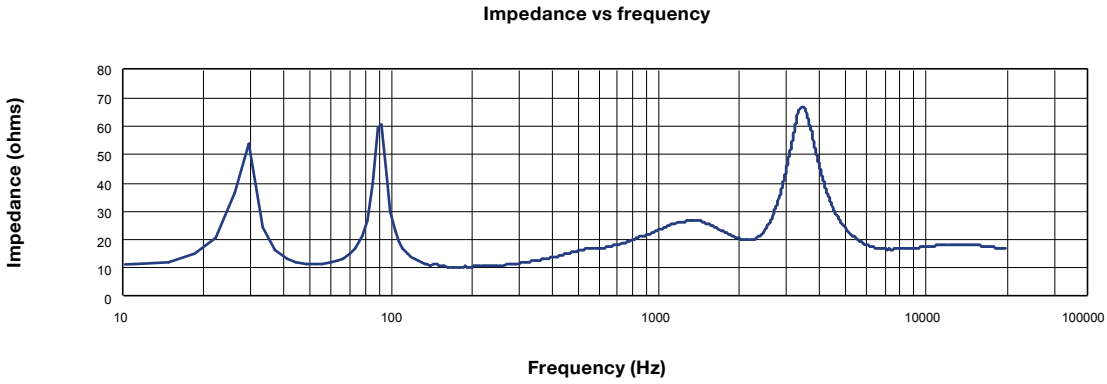

Impedance

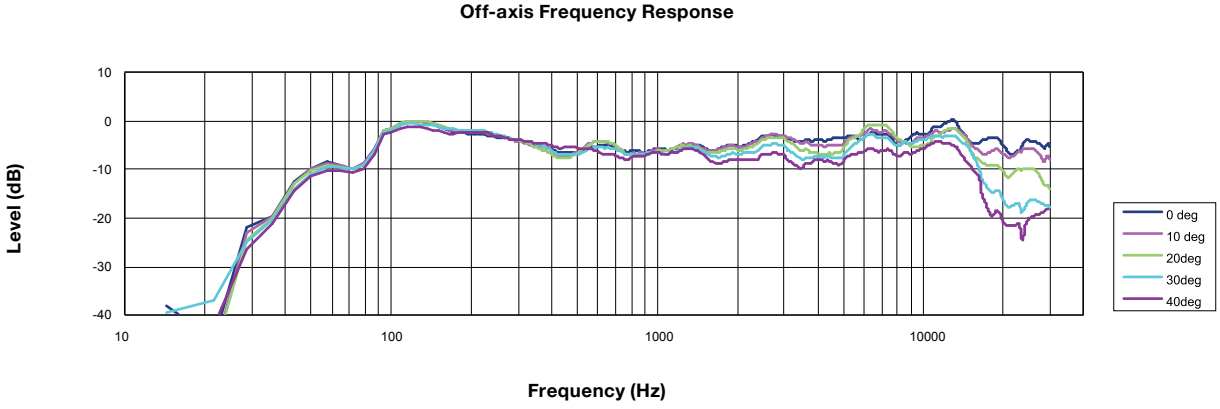

Off Axis Response

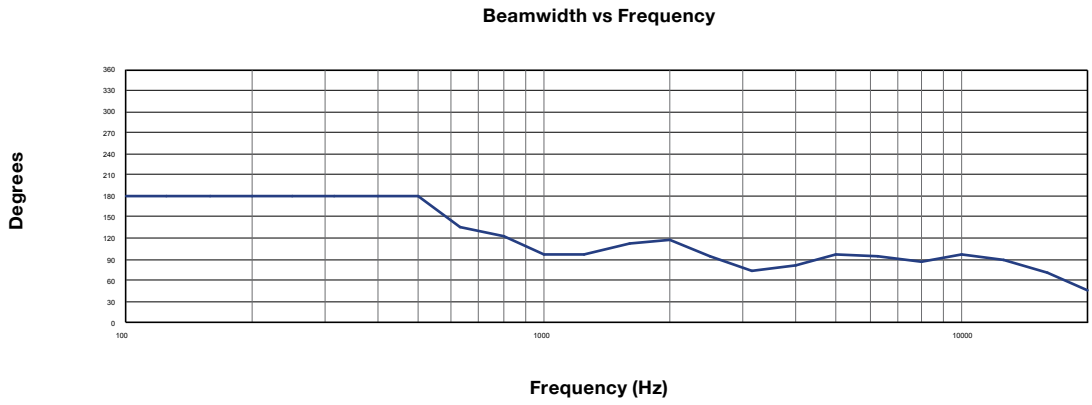

Beamwidth

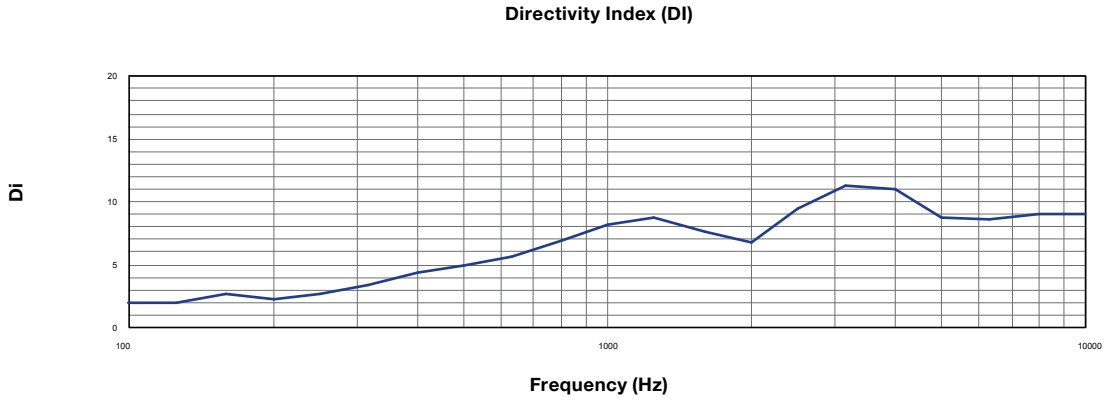

Directivity Index

Technical Data Sheet

Polar plots (1/3 octave)

CMS 803DC BM

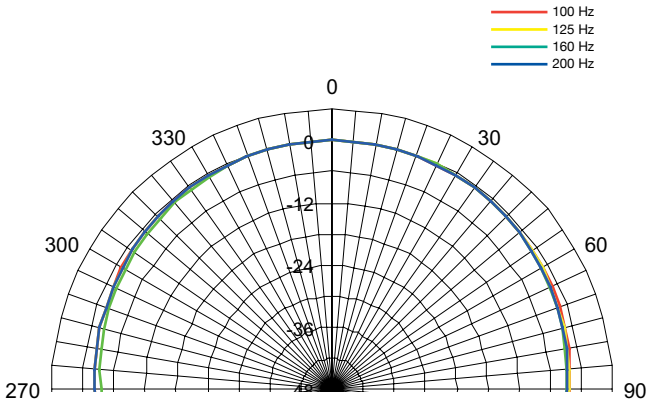

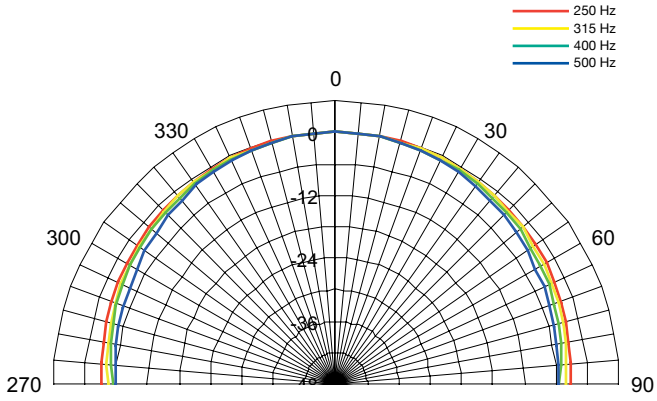

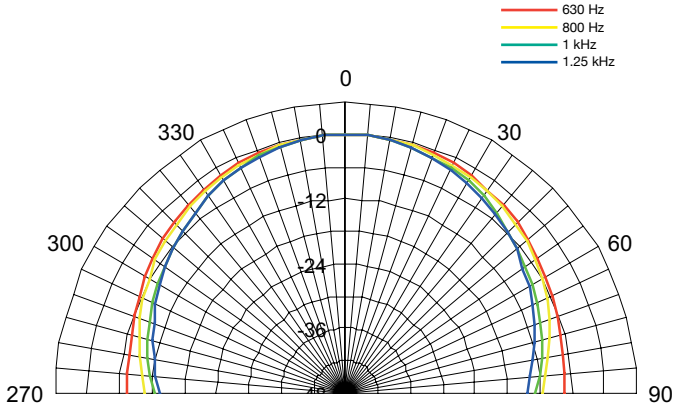

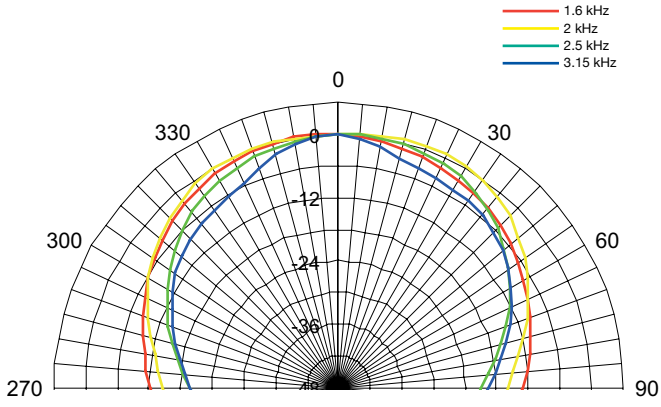

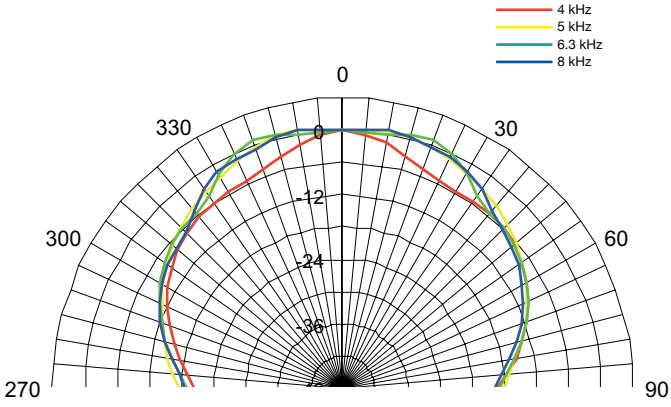

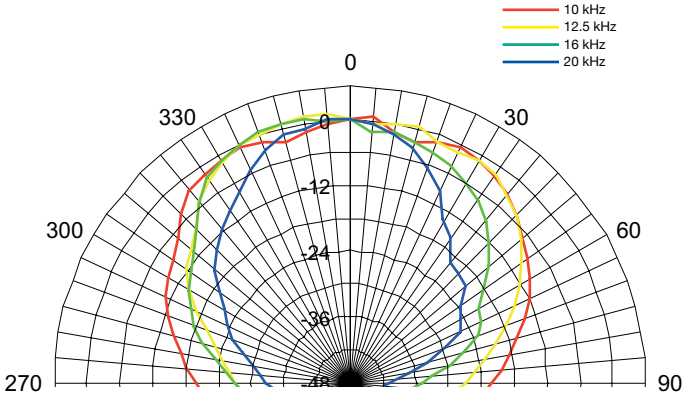

Technical Data Sheet

Specifications

CMS 803DC BM

Performance	
Frequency response (-3 dB) [1]	47 Hz - 30 kHz
Frequency range (-10 dB) [1]	40 Hz - 35 kHz
System sensitivity (1 W @ 1 m) [2]	92 dB (1 W = 4 V for 16 Ohms)
Nominal Coverage Angle	90 degrees conical
Power Handling [3]	
Average	90 W
Programme	180 W
Peak	360 W
Recommended Amplifier Power	180 W @ 16 ohms
Nominal Impedance (Lo, Z)	16 ohms
Rated maximum SPL	
Average	112 dB
Peak	118 dB
With THP60 - Average	110 dB
Transformer Taps (via front rotary switch)	
70 V	60 W (83 Ω) / 30 W (165 Ω) / 15 W (330 Ω) / 7.5 W (660 Ω) / OFF & low impedance operation
100 V	60 W (165 Ω) / 30 W (330 Ω) / 15 W (660 Ω) / OFF & low impedance operation

Transducers	
Dual Concentric point source driver	1 x 200 mm (8.0") Dual Concentric driver, using Omnimagnet technology
Low Frequency	44 mm (1.75") voice coil, treated multi fiber paper pulp cone
High Frequency	25 mm (1.00") PEI dome

Physical	
Enclosure	
Backcan	Zinc plated steel
Baffle	Reflex loaded UL 94V-0 rated ABS
Grille	Steel, with weather resistant coating
Safety Features	Safety ring located at rear of enclosure for load bearing safety bond
Clamping Design	Security toggle clamp Min / Max clamping range 9.5 mm (0.37") / 60 mm (2.36") Recommended clamp torque: 1.5 Nm
Backcan Options	Complete with fixed backcan
Cable Entry Options	Cable clamp & squeeze connector for conduit up to 22 mm
Connectors	Removable locking connector with screw terminals with "loop through" facility
Compliance	UL-1480, UL-2043, CE
Dimensions	
Bezel diameter	319.0 mm (12.56")
Front of ceiling to rear of backcan	310.5 mm (12.22")
Front of ceiling to top of safety loop	327.7 mm (12.90")
Hole cutout diameter (all models)	295 mm (11.61")
Net Weight (ea)	8.5 kg (18.74 lbs)
Included Accessories	C-Ring, tile-bridge kit, paint mask, cut-out template, grille
Optional Accessories	Plaster (mud) ring, Arco grille
Packed Quantity	2

Ordering Information

Part Number	Colour
8001 7470 **CMS 803DC BM**	**White / Paintable**
8001 4650 **CMS 803** **Plaster (Mud) Ring**	**Zinc Plated Steel**
8001 7900 **CMS 803 Arco Grille**	**White / Paintable**

CE

UL LISTED
UL-1480,
UL-2043

Notes:

1. Average over stated bandwidth. Measured in an IEC baffle in an Anechoic Chamber
2. Unweighted pink noise input, measured at 1 metre on axis
3. Long term power handling capacity as defined in EIA - 426B test

A full range of measurements, performance data, CLF and Ease™ Data for CMS 803DC BM can be downloaded from www.tannoypro.com.

Tannoy operates a policy of continuous research and development. The introduction of new materials or manufacturing methods may introduce variations in actual performance; however, actual performance always will equal or exceed the published specifications, which Tannoy reserves the right to alter without prior notice. Please verify the latest specifications when dealing with critical applications.

Copyright (c) 2015 Tannoy Limited. All rights reserved.

AUDIOVISUAL SYSTEM ABBREVIATIONS

4S/DP	4" SQUARE BY 2-1/2" DEEP BOX
ADA	AMERICAN WITH DISABILITIES ACT
A.F.F.	ABOVE FINISH FLOOR
A.F.G.	ABOVE FINISHED GRADE
ADAx-x	AUDIO DISTRIBUTION AMPLIFIER
ACMBx-x	AUDIO COMBINER/SPLITTER
AMFMRXx-x	AM/FM BROADCAST RECEIVER
AMPx-x	AUDIO POWER AMPLIFIER
ANTx-x	ANTENNA
ANTDAx-x	ANTENNA DISTRIBUTION AMPLIFIER
AHJ	AUTHORITY HAVING JURISDICTION
ARCH	ARCHITECT
AVC	AUDIOVISUAL CONTRACTOR
AVB	AUDIO VIDEO BUS
AVBSWTx-x	AVB SWITCH
AWG	AMERICAN WIRE GAUGE
BDx-x	BLU-RAY DISK PLAYER
CBLK1-1	CONTROL BUSS BLOCK
CAMx-x	CAMERA
CATVRXx-x	CABLE TV RECEIVER BOX
CDx-x	CD PLAYER
CNTLx-x	SYSTEM CONTROLLER
BPTXx-x	BELT-PACK WIRELESS MICROPHONE TRANSMITTER
CODECx-x	VIDEO CONFERENCING CODEC
DSPx-x	DIGITAL SIGNAL PROCESSOR
DLFTx-x	LED DISPLAY LIFT
DISPx-x	LED DISPLAY
EC	ELECTRICAL CONTRACTOR
FPx-x	FLOOR PANEL
FT	FEET, MEASUREMENT
GC	GENERAL CONTRACTOR
SIGGENx-x	SIGNAL GENERATOR
GNMICx-x	GOOSE NECK MICROPHONE
GND	GROUND
HDMIDAx-x	HDMI DISTRIBUTION AMPLIFIER
HDSDIx-x	HD SDI DISTRIBUTION AMPLIFIER
HHMTXx-x	HAND HELD MICROPHONE TRANSMITTER
H., W., D., L.	HEIGHT, WIDTH, DEPTH, LENGTH
IN	INCHES, MEASUREMENT
ISOGND	ISOLATED GROUND
IBC	INTERNATIONAL BUILDING CODE
IDF	INTERMEDIATE DISTRIBUTION FRAME
IPOD	APPLE IPOD MP3 MUSIC PLAYER
J-BOX	JUNCTION BOX
LVCx-x	LOW VOLTAGE SCREEN MOTOR CONTROLLER
MIXx-x	AUDIO MIXER
NEC	NATIONAL ELECTRIC CODE
NEMA	NATIONAL ELECTRIC MANUFACTURERS' ASSOCIATION
N.C.	NORMALLY CLOSED
N.O.	NORMALLY OPEN
NIC	NOT IN CONTRACT
NETSWTx-x	NETWORK SWITCH
NTS	NOT TO SCALE
NO. or #	NUMBER
OFCI	OWNER FURNISHED CONTRACTOR INSTALLED
OFOI	OWNER FURNISHED OWNER INSTALLED
OFE	OWNER FURNISHED EQUIPMENT
PCx-x	PC COMPUTER
PROJx-x	PROJECTOR
PoE	POWER OVER ETHERNET
RACKx-x	EQUIPMENT RACK
RCDRx-x	RECORDER
SCNx-x	PROJECTION SCREEN
SWTx-x	SWITCHER
TPx-x	TOUCH PANEL
TYP	TYPICAL
UON	UNLESS OTHERWISE NOTED
UPSx-x	UN-INTERUPTABLE POWER SUPPLY
WAPx-x	WIRELESS ACCESS POINT
XFMRx-x	TRANSFORMER

EQUIPMENT BLOCK LEGEND

ADAx-x

- UNIT QUANTITY DESIGNATION
- UNIT TYPE NUMBER
- UNIT DESCRIPTION ABBREVIATION

GENERAL NOTES:

1. ELECTRICAL CONTRACTOR SHALL PROVIDE ALL CONDUIT. JUNCTION BOXES, CABLE TRAYS, COVER PLATES, PULL STRING, ENCLOSURES, FLOOR BOXES, POWER RECEPTACLES AND POWER CONNECTIONS IDENTIFIED IN THESE DRAWINGS AND SPECIFICATIONS.
2. ALL JUNCTION BOXES IN WALLS AND CEILINGS SHALL BE FLUSH MOUNTED. CONDUITS SHALL BE CONCEALED UNLESS OTHERWISE NOTED.
3. ALL AUDIOVISUAL CONDUIT RUNS SHALL BE CONTINUOUS FROM END TO END. NO CONDUIT RUNS SHALL EXCEED 100 FEET. ALL CONDUIT RUNS EXCEEDING 100 FEET MUST HAVE LARGE RADIUS BENDS.
4. AV CONTRACTOR SHALL PROVIDE STRUCTURAL SUPPORT FOR MOUNTING OF AUDIOVISUAL EQUIPMENT AT LOCATIONS DESIGNATED IN THESE DRAWINGS. THIS SHALL INCLUDE, BUT NOT BE LIMITED TO, BLOCKING FOR WALL MOUNTED DEVICES AND OVERHEAD SUPPORT FOR CEILING MOUNTED PROJECTORS AND PROJECTION SCREENS.
5. REFER TO AUDIOVISUAL DRAWINGS FOR SUPPORT DETAILS AND REQUIREMENTS.
6. DIMENSIONS ARE INDICATED ON AUDIOVISUAL DRAWINGS WHERE CRITICAL TO THE INSTALLATION AND PERFORMANCE OF THE AUDIOVISUAL DEVICES. WHERE INFORMATION AND REQUIREMENTS CONFLICT WITH SPECIFICATIONS AND DESIGNS DELINEATED ELSEWHERE, THE GENERAL CONTRACTOR SHALL IMMEDIATELY BRING SUCH CONFLICTS TO THE ATTENTION OF THE OWNER.
7. THE ARCHITECTURAL, FURNITURE AND FINISH CONFIGURATIONS ILLUSTRATED ON THE AUDIOVISUAL DRAWINGS ARE FOR REFERENCE ONLY. REFER TO THE ARCHITECTURAL DRAWINGS FOR SPECIFICATIONS AND REQUIREMENTS.
8. ALL EQUIPMENT INSTALLATION AND MOUNTING DETAILS PROVIDED IN THE AUDIOVISUAL DRAWINGS ARE FOR REFERENCE ONLY. REFER TO ARCHITECTURAL AND ENGINEERING AS-BUILT DRAWINGS FOR SPECIFIC REQUIREMENTS.
9. DATA/COMMUNICATION OUTLETS AND POWER OUTLETS ARE SHOWN FOR REFERENCE ONLY. REFER TO THE DRAWINGS FOR EXACT LOCATION OF THE DATA/COMMUNICATION OUTLETS AND TO THE AS-BUILT ELECTRICAL DRAWINGS FOR THE EXACT LOCATION OF THE POWER RECEPTACLES. CONTRACTOR TO VERIFY ON SITE EXACT LOCATIONS.
10. CEILING MOUNTED SPEAKER ENCLOSURES SHALL BE SUPPORTED FROM OVERHEAD STRUCTURE. DO NOT HANG SPEAKER ENCLOSURES FROM FINISHED CEILING.
11. CONTRACTOR SHALL PROVIDE PULL STRINGS IN ALL NEW CONDUIT SPECIFIED IN AUDIOVISUAL DRAWINGS. CONTRACTOR SHALL LABEL ALL AUDIOVISUAL JUNCTION BOXES WITH DESIGNATED BOX ID NUMBER (E.G., AV100).
12. CONTRACTOR SHALL PROVIDE BLANK COVER PLATES AT ALL NEW AUDIOVISUAL JUNCTION BOXES. VERIFY ALL DEVICE PLATE FINISHES WITH OWNER AND CONSULTANT. COORDINATE MOUNTING HEIGHTS AND LOCATIONS OF ALL AUDIOVISUAL JUNCTION BOXES AND DEVICES WITH OWNER AND CONSULTANT.
13. SOME JUNCTION BOXES AND ENCLOSURES SPECIFIED IN AUDIOVISUAL DRAWINGS MAY BE DEEPER THAN STANDARD WALL DEPTH. COORDINATE WITH CONSULTANT AND OWNER TO VERIFY INSTALLATION REQUIREMENTS AND DETAILING.
14. WHERE SPECIFIED, LOW VOLTAGE CONTROL INTERFACE ELECTRONICS SHALL BE PROVIDED TO ENABLE OPERATION OF LINE VOLTAGE DEVICES (E.G., PROJECTION SCREENS, LIGHTING, WINDOW COVERINGS) VIA THE AUDIOVISUAL CONTROL SYSTEM. PROVIDE SERIAL DIGITAL (E.G., RS232) INTERFACE CONTROL WHERE AVAILABLE WHERE MORE THAN ONE CONDUIT TERMINATES IN A JUNCTION BOX THE ELECTRICAL CONTRACTOR SHALL LABEL EACH CONDUIT IN A MANNER ALLOWING IDENTIFICATION OF CONDUITS AFTER WALL FINISHES ARE APPLIED.
15. AUDIOVISUAL INFRASTRUCTURE DIAGRAM IDENTIFY SIGNAL CABLE CONTAINMENT REQUIREMENTS ONLY. AUDIOVISUAL CABLING AND SPECIALTY CONNECTOR PLATES ARE BY AUDIOVISUAL CONTRACTOR.
16. ALL CONDUITS SPECIFIED SHALL BE EMT OR RIGID TYPE. FLEXIBLE CONDUITS MAY BE USED IN RUNS OF 72" OR LESS. FLEXIBLE CONDUITS SHALL NOT BE ALLOWED WHERE ACCESS CANNOT BE PROVIDED TO THE FULL LENGTH OF THE CONDUIT RUN.
17. AUDIOVISUAL CONTRACTOR TO INSTALL PROJECTION SCREEN HOUSING FOR ALL FUTURE PROJECTION SCREEN LOCATIONS. U.O.N.

ANNOTATIONS:

x / AVx.xx — DETAIL CALLOUT, "x" INDICATES DETAIL NUMBER "AVx-xx" INDICATES SHEET NUMBER.

2 — PLAN NOTE REFERENCE, REFER TO NOTES ON SHEET, OR AS DIRECTED.

1 — REVISION REFERENCE.

AUDIOVISUAL SYSTEM SYMBOLS

AP — ACOUSTIC ABSORPTION PANEL. COMPRESSED MINERAL FIBER FABRIC WRAPED.

HSB — AUDIOVISUAL SYSTEM CONDUIT COLLECTOR BOX. VERIFY SIZE AND HEIGHT WITH CONDUIT RISER DIAGRAM.

MC — AUDIOVISUAL MICROPHONE OUTLET, FLUSH CEILING MOUNTED.

HMC — AUDIOVISUAL MICROPHONE OUTLET, FLUSH WALL MOUNTED, VERIFY SIZE AND HEIGHT WITH AV DRAWINGS.

HS — AUDIOVISUAL SPEAKER, SURFACE WALL MOUNTED SPEAKER, VERIFY HEIGHT WITH AV DRAWINGS.

S — AUDIOVISUAL CEILING FLUSH MOUNTED SPEAKER.

HVC — AUDIOVISUAL VOLUME CONTROL.

HCM — AUDIOVISUAL CAMERA, WALL MOUNTED, VERIFY HEIGHT WITH AV DRAWINGS.

HAN — AUDIOVISUAL ANTENNA, WALL MOUNTED, VERIFY HEIGHT WITH AV DRAWINGS.

HALS — AUDIOVISUAL ASSISTIVE LISTENING IR EMITTER, WALL MOUNTED, VERIFY HEIGHT WITH AV DRAWINGS.

HSCN — AUDIOVISUAL PROJECTION SCREEN LOW VOLTAGE SWITCH, WALL MOUNTED.

HKP — AUDIOVISUAL KEYPAD CONTROL SYSTEM INTERFACE, WALL MOUNTED, VERIFY HEIGHT WITH AV DRAWINGS.

HTP — AUDIOVISUAL TOUCH PANEL CONTROL SYSTEM INTERFACE, WALL MOUNTED, VERIFY HEIGHT WITH AV DRAWINGS.

EXISTING AV EQUIPMENT RACKS, TO BE RE-USED

AUDIO PRESS FEED, DUAL XLR, LOOPED OUTPUTS

AUX/CAM HDMI INPUT XTP TX PLATE

ALS IR EMITTER, 1-1 NEW, 1-2 IS EXISTING

TABLE TOP TOUCH CONTROL PANEL

DCS1-X = DELEGATE MICROPHONE STATION

DISP1-X = 20" LED DISPLAY, SET INTO EXISTING OPENING IN DAIS TOP

DISP2-X = 55" LED DISPLAY, WALL MOUNTED BEHIND DAIS FOR VOTING SYSTEM RESULTS

MIP — MICROPHONE INPUT PLATE, EXISTING

MIP — AV MEDIA INPUT PLATE (MIP) TX, NEW

WALL/CEILING MOUNTED PTZ CAMERA, NEW

CEILING MOUNTED PROJECTOR, NEW

DRAWING LIST:

AV-001	LEGEND AND SYMBOLS
AV-100	BUILDING-A, BOARDROOM AV FLOOR PLAN
AV-101	BUILDING-A, TRAINING AE117, AV FLOOR PLAN
AV-102	BUILDING-A, MULTIPURPOSE AE153 & AE154 AV FLOOR PLAN
AV-103	BUILDING-D, TRAINING D106 & D107 AV FLOOR PLAN
AV-200	BUILDING-A, BOARDROOM AV CEILING PLAN
AV-201	BUILDING-A, TRAINING AE117, AV CEILING PLAN
AV-202	BUILDING-A, MULTIPURPOSE AE153 & AE154 AV CEILING PLAN
AV-203	BUILDING-D, TRAINING D106 & D107 AV CEILING PLAN
AV-401	AUDIOVISUAL SYSTEM DRAWING
AV-401.1	AUDIOVISUAL SYSTEM DRAWING
AV-402	AUDIOVISUAL SYSTEM DRAWING
AV-402.1	AUDIOVISUAL SYSTEM DRAWING
AV-403	AUDIOVISUAL SYSTEM DRAWING
AV-404	AUDIOVISUAL SYSTEM DRAWING
AV-405	AUDIOVISUAL SYSTEM DRAWING
AV-405.1	AUDIOVISUAL SYSTEM DRAWING
AV-405.2	AUDIOVISUAL SYSTEM DRAWING
AV-406	AUDIOVISUAL SYSTEM DRAWING
AV-601	DETIALS

ENGINEER

tk1sc COLLABORATIVE
15231 Laguna Canyon Road, Suite 100
Irvine, California 92618
949.751.5800 www.tk1sc.com
(Project Manager- Scott Tonelson)
tk1sc Job #: 2015-0490

This and all other project documents and all ideas, aesthetics and designs incorporated therein are instruments of service. All project documents are the registered property of tk1sc and cannot be lawfully used in whole or in part for any project or purpose except as described in the contractual agreement between tk1sc and Client. tk1sc hereby gives formal notice that any such project document use, reproduction or modification (misuse) is not only unlawful but automatically binds all parties involved with misuse to fully indemnify and defend tk1sc and tk1sc's Consultants to the maximum legal extent against all losses, demands, claims or liabilities arising directly or indirectly from project document misuse.

Project documents describe design intent of work and are not a representation of as-built or existing conditions. tk1sc and tk1sc's Consultants make no representations concerning the accuracy of documents and are not responsible for any discrepancies between project documents and the existing conditions.

© Copyright 2016

PROJECT

ORANGE COUNTY FIRE AUTHORITY

ONE FIRE AUTHORITY ROAD
IRVINE, CA 92602

ENGINEER'S STAMP

REVISION INFORMATION

REV.	DESCRIPTION	DATE

DATE 01-05-16 DRAWN BY JS

SCALE N.T.S. CHECKED BY SKT

DRAWING TITLE

AUDIOVISUAL SYSTEMS LEGEND AND SYMBOLS

DRAWING No.

AV-001

PLAN NOTES:

NOTE: ALL CONDUITS ARE EXISTING, EXISTING CABLING WILL NEED TO BE REMOVED WHERE REQUIRED AND NOTED IN SPECIFICATION.

1. 20" LED DISPLAY WITH ADJUSTABLE STAND, LOCATED IN EXISTING OPENINGS IN DAIS TOP
2. DELEGATE CONFERENCE STATION (DCSX-X) WITH MICROPHONE
3. FLOOR BOX 1 WITH EXISTING MICROPHONE INPUT PLATE
4. FLOOR BOX 2 WITH NEW XTP DECORA TRANSMITTER INPUT PLATE
5. CAM1 – MOUNTED PTZ CAMERA, #3 RIGHT SIDE HAS EXISTING CONDUIT AND IN-WALL BOX, #4 LEFT SIDE IS A NEW CAMERA, IT WILL REQUIRE NEW INFRASTRUCTURE 4S BOX WITH 1G RING
6. THREE LED DISPLAYS (2 – 20", 1– 22") MOUNTED ON TRIPLE MOUNT DESK STAND/CLAMP
7. 10" TABLE TOP CONTROL PANEL, POWER OVER CAT6 CABLE
8. 12" TABLE TOP CONTROL PANEL, LOCAL POWER
9. WIRED GOOSENECK MICROPHONE, EXISTING
10. NEW 4S BOX WITH 1G RING, AND 1" CONDUIT INTO ACCESSIBLE CEILING SPACE IN AV BOOTH
11. AUDIO PRESS FEED, ONE (1) XLR-M CONNECTIONS, CUSTOM PLATE, REFERENCE AV6.01 DETAIL 1.
12. (2) CUSTOM VOTING PANELS / DISPLAYS, WALL MOUNTED PORTRAIT ORIENTATION FOR VOTING RESULTS, SEE SPECIFICATIONS, PROVIDED BY AVC.
13. ALS IR EMITTER, 1–1 IS A NEW UNIT, 1–2 IS EXISTING. POWER AND AUDIO CABLING IS EXISTING TO BOTH LOCATIONS
14. EXISTING AV RACKS FOR BOARDROOM SYSTEM
15. EXISTING SPEAKER TIME CONTROL BOX
16. EXISTING SPEAKER TIME LIGHT BOX
17. ANOUNCER/TALK BACK MICROPHONE, SEE SPECIFICATIONS, PROVIDED BY AVC.
18. AV PULL BOX 2 GANG DEEP WITH 2 GANG RING AT HEIGHT INDICATED, PROVIDE (1) 1" CONDUIT STUBBED INTO ACCESSIBLE SPACE BY E.C.
19. 65" LED PROFESSIONAL DISPLAY BY AVC.
20. ADDED DATA JACK AT WALL MOUNTED PTZ CAMERA LOCATIONS FOR FUTURE.
21. HAND HELD VOTING STATION, 1 PER SEAT, TOTAL OF 30 SEATS
22. VOTING SYSTEM CONTROLLER

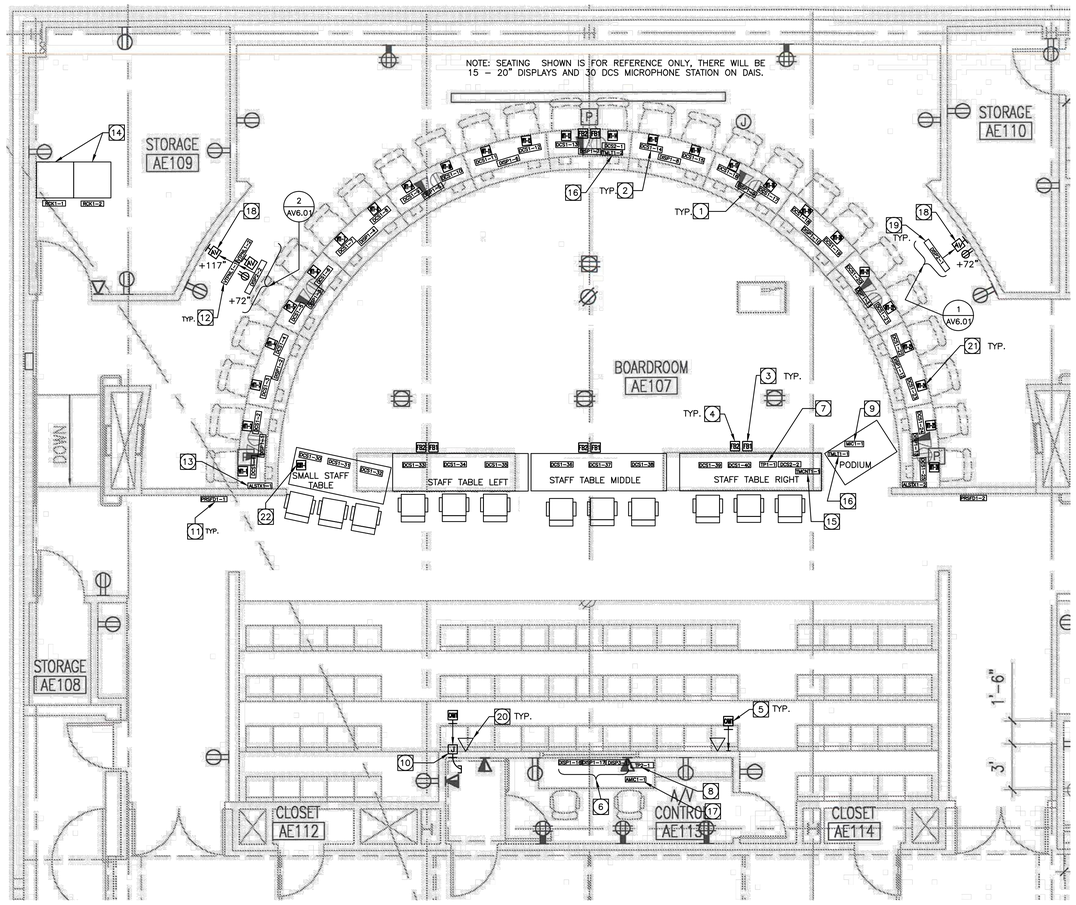

BOARDROOM AE107 AV FLOOR PLAN (1)

SCALE: NOT TO SCALE

ENGINEER

tk1sc COLLABORATIVE
15231 Laguna Canyon Road, Suite 100
Irvine, California 92618
949.751.5800 www.tk1sc.com
(Project Manager- Scott Tonelson)
tk1sc Job #: 2015-0490

This and all other project documents and all ideas, aesthetics and designs incorporated therein are instruments of service. All project documents are the registered property of tk1sc and cannot be lawfully used in whole or in part for any project or purpose except as described in the contractual agreement between tk1sc and Client. tk1sc hereby gives formal notice that any such project document use, reproduction or modification (misuse) is not only unlawful but automatically binds all parties involved with misuse to fully indemnify and defend tk1sc and tk1sc's Consultants to the maximum legal extent against all losses, demands, claims or liabilities arising directly or indirectly from project document misuse.

Project documents describe design intent of work and are not a representation of as-built or existing conditions. tk1sc and tk1sc's Consultants make no representations concerning the accuracy of documents and are not responsible for any discrepancies between project documents and the existing conditions.

© Copyright 2016

PROJECT

ORANGE COUNTY FIRE AUTHORITY

ONE FIRE AUTHORITY ROAD
IRVINE, CA 92602

ENGINEER'S STAMP

REVISION INFORMATION

REV.	DESCRIPTION	DATE

DATE 01-05-16 DRAWN BY JS
SCALE NOT TO SCALE CHECKED BY SKT

DRAWING TITLE

BUILDING A
BOARDROOM AE107
AV FLOOR PLAN

DRAWING No.

AV-100

PLAN NOTES:

NOTE: ALL CONDUITS ARE EXISTING, EXISTING CABLING WILL NEED TO BE REMOVED WHERE REQUIRED AND NOTED IN SPECIFICATION.

1. EXISTING MICROPHONE WALL PLATE, AVC TO TEST AND VERIFY.
2. MEDIA INPUT PLATE (MIP) WALL PLATE WITH NEW DTP DECORA TRANSMITTER INPUT PLATE, PROVIDED BY AVC.
3. FLOOR BOX 1 WITH EXISTING MICROPHONE INPUT PLATE, AVC TO TEST AND VERIFY.
4. FLOOR BOX 2 WITH NEW XTP DECORA MIP TRANSMITTER INPUT PLATE
5. CAM1, WALL MOUNTED PTZ CAMERA (NEW) BACK OF ROOM PROVIDED BY AVC, IN-WALL BOX EXISTING
6. TP2 – 12" TABLE TOP CONTROL PANEL, LOCAL POWER FROM FLOOR BOX, PIP VIDEO FEED OVER SEPARATE XTP/DTP CABLE CABLE, PROVIDED BY AVC.
7. EXISTING AV RACK FOR ROOM SYSTEM IN STORAGE ROOM 110.
8. EXISTING ALS IR EMITTER
9. ADDED DATA JACK AT WALL MOUNTED PTZ CAMERA LOCATIONS FOR FUTURE, NEW 1 GANG ELECTRICAL BOX AND 3/4" CONDUIT STUBBED INTO ACCESSABLE CEILING SPACE REQUIRED..
10. CAM2 – USB CAMERA MOUNTED ON LCD/LED DISPLAY FOR SKYPE CONFERENCE CALLS PROVIDEDD BY AVC, A NEW 1 GANG ELECTRICAL BOX AND 3/4" CONDUIT STUBBED INTO ACCESSIBLE CEILING SPACE PROVIDED BY E.C.

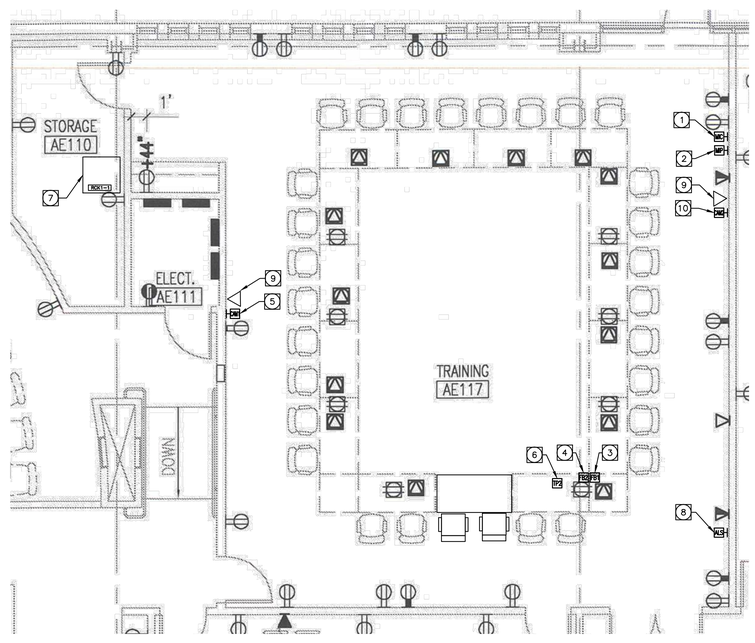

TRAINING AE117 AV FLOOR PLAN (1)

SCALE: NOT TO SCALE

ENGINEER

tk1sc COLLABORATIVE
15231 Laguna Canyon Road, Suite 100
Irvine, California 92618
949.751.5800 www.tk1sc.com
(Project Manager- Scott Tonelson)
tk1sc Job #: 2015-0490

This and all other project documents and all ideas, aesthetics and designs incorporated therein are instruments of service. All project documents are the registered property of tk1sc and cannot be lawfully used in whole or in part for any project or purpose except as described in the contractual agreement between tk1sc and Client. tk1sc hereby gives formal notice that any such project document use, reproduction or modification (misuse) is not only unlawful but automatically binds all parties involved with misuse to fully indemnify and defend tk1sc and tk1sc's Consultants to the maximum legal extent against all losses, demands, claims or liabilities arising directly or indirectly from project document misuse.

Project documents describe design intent of work and are not a representation of as-built or existing conditions. tk1sc and tk1sc's Consultants make no representations concerning the accuracy of documents and are not responsible for any discrepancies between project documents and the existing conditions.

© Copyright 2016

PROJECT

ORANGE COUNTY FIRE AUTHORITY

ONE FIRE AUTHORITY ROAD
IRVINE, CA 92602

ENGINEER'S STAMP

REVISION INFORMATION

REV.	DESCRIPTION	DATE

DATE 01-05-16 DRAWN BY JS
SCALE NOT TO SCALE CHECKED BY SKT

DRAWING TITLE

BUILDING A
TRAINING AE-117
AV FLOOR PLAN

DRAWING No.

AV-101

PLAN NOTES:

NOTE: ALL CONDUITS ARE EXISTING, EXISTING CABLING WILL NEED TO BE REMOVED WHERE REQUIRED AND NOTED IN SPECIFICATION.

1. FLOOR BOX 1 WITH EXISTING MICROPHONE INPUT PLATE
2. FLOOR BOX 2 WITH NEW XTP DECORA MIP TRANSMITTER INPUT PLATE
3. EXISTING ALS EMITTER
4. TP2 – 12" TABLE TOP CONTROL PANEL, LOCAL POWER FROM FLOOR BOX, PIP VIDEO FEED OVER SEPARATE XTP/DTP CABLE CABLE, PROVIDED BY AVC.
5. EXISTING AV ½ RACK FOR CLASSROOM SYSTEM IN MILLWORK BEHIND PODIUM
6. EXISTING WALL MOUNTED LCD/LED DISPLAY,
7. EXISTING PODIUM WITH OFE PC INSTALLED
8. CAM2 – USB CAMERA MOUNTED ON LCD/LED DISPLAY FOR SKYPE CONFERENCE CALLS, PROVIDED BY AVC, A NEW 1 GANG ELECTRICAL BOX AND 3/4" CONDUIT STUBBED INTO ACCESSIBLE CEILING SPACE PROVIDED BY E.C..
9. ADDED DATA JACK AT WALL MOUNTED PTZ CAMERA LOCATIONS FOR FUTURE, A NEW 1 GANG ELECTRICAL BOX AND 3/4" CONDUIT STUBBED INTO ACCESSIBLE CEILING SPACE PROVIDED BY E.C..

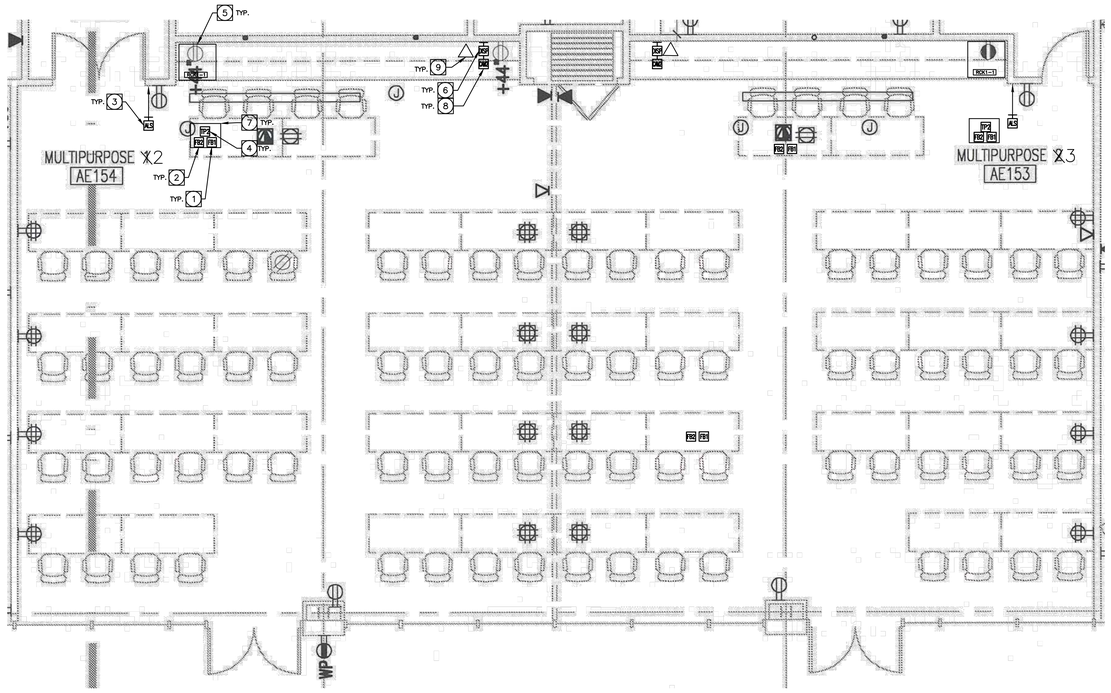

MULTIPURPOSE AE153 & AE154 AV FLOOR PLAN (1)

SCALE: NOT TO SCALE

ENGINEER

tk1sc COLLABORATIVE
15231 Laguna Canyon Road, Suite 100
Irvine, California 92618
949.751.5800 www.tk1sc.com
(Project Manager- Scott Tonelson)
tk1sc Job #: 2015-0490

This and all other project documents and all ideas, aesthetics and designs incorporated therein are instruments of service. All project documents are the registered property of tk1sc and cannot be lawfully used in whole or in part for any project or purpose except as described in the contractual agreement between tk1sc and Client. tk1sc hereby gives formal notice that any such project document use, reproduction or modification (misuse) is not only unlawful but automatically binds all parties involved with misuse to fully indemnify and defend tk1sc and tk1sc's Consultants to the maximum legal extent against all losses, demands, claims or liabilities arising directly or indirectly from project document misuse.

Project documents describe design intent of work and are not a representation of as-built or existing conditions. tk1sc and tk1sc's Consultants make no representations concerning the accuracy of documents and are not responsible for any discrepancies between project documents and the existing conditions.

© Copyright 2016

PROJECT

ORANGE COUNTY FIRE AUTHORITY

ONE FIRE AUTHORITY ROAD
IRVINE, CA 92602

ENGINEER'S STAMP

REVISION INFORMATION

REV.	DESCRIPTION	DATE

DATE 01-05-16 DRAWN BY JS
SCALE NOT TO SCALE CHECKED BY SKT

DRAWING TITLE

BUILDING A
MULTIPURPOSE
AE153 & AE154
AV FLOOR PLAN

DRAWING No.

AV-102

PLAN NOTES:

NOTE: ALL CONDUITS ARE EXISTING, EXISTING CABLING WILL NEED TO BE REMOVED WHERE REQUIRED AND NOTED IN SPECIFICATION.

1. FLOOR BOX 1 WITH EXISTING MICROPHONE INPUT PLATE
2. FLOOR BOX 2 WITH NEW XTP DECORA MIP TRANSMITTER INPUT PLATE
3. NEW ALS EMITTER, MOUNTED ABOVE 80" A.F.F
4. TP2 – 12" TABLE TOP CONTROL PANEL, LOCAL POWER FROM FLOOR BOX, PIP VIDEO FEED OVER SEPARATE XTP/DTP CABLE CABLE, PROVIDED BY AVC.
5. EXISTING AV ½ RACKS IN THE MILLWORK AT THE BACK OF THE CLASSROOM
6. EXISTING WALL MOUNTED LCD/LED DISPLAY.
7. EXISTING WALL MOUNTED SPEAKERS.
8. EXISTING PODIUM WITH OFE PC INSTALLED
9. CAM2 – USB CAMERA MOUNTED ON LCD/LED DISPLAY FOR SKYPE CONFERENCE CALLS, PROVIDED BY AVC. A NEW 1 GANG ELECTRICAL BOX AND 3/4" CONDUIT STUBBED INTO ACCESSIBLE CEILING SPACE PROVIDED BY E.C.
10. ADDED DATA JACK AT WALL MOUNTED PTZ CAMERA LOCATIONS FOR FUTURE. A NEW 1 GANG ELECTRICAL BOX AND 3/4" CONDUIT STUBBED INTO ACCESSIBLE CEILING SPACE PROVIDED BY E.C.

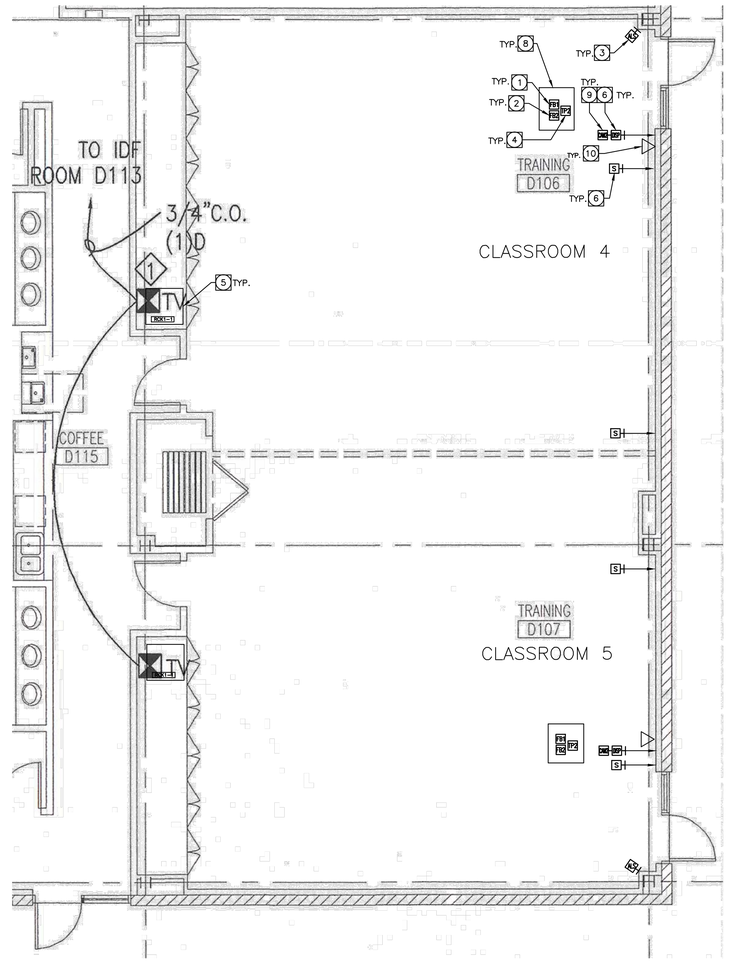

TRAINING D106 & D107 AV FLOOR PLAN (1)

SCALE: NOT TO SCALE

ENGINEER

tk1sc COLLABORATIVE
15231 Laguna Canyon Road, Suite 100
Irvine, California 92618
949.751.5800 www.tk1sc.com
(Project Manager- Scott Tonelson)
tk1sc Job #: 2015-0490

This and all other project documents and all ideas, aesthetics and designs incorporated therein are instruments of service. All project documents are the registered property of tk1sc and cannot be lawfully used in whole or in part for any project or purpose except as described in the contractual agreement between tk1sc and Client. tk1sc hereby gives formal notice that any such project document use, reproduction or modification (misuse) is not only unlawful but automatically binds all parties involved with misuse to fully indemnify and defend tk1sc and tk1sc's Consultants to the maximum legal extent against all losses, demands, claims or liabilities arising directly or indirectly from project document misuse.

Project documents describe design intent of work and are not a representation of as-built or existing conditions. tk1sc and tk1sc's Consultants make no representations concerning the accuracy of documents and are not responsible for any discrepancies between project documents and the existing conditions.

© Copyright 2016

PROJECT

ORANGE COUNTY FIRE AUTHORITY

ONE FIRE AUTHORITY ROAD
IRVINE, CA 92602

ENGINEER'S STAMP

REVISION INFORMATION

REV.	DESCRIPTION	DATE

DATE 01-05-16 DRAWN BY JS
SCALE NOT TO SCALE CHECKED BY SKT

DRAWING TITLE

BUILDING D
TRAINING
D106 & D107
AV FLOOR PLAN

DRAWING No.

AV-103

PLAN NOTES:

NOTE: ALL CONDUITS ARE EXISTING, EXISTING CABLING WILL NEED TO BE REMOVED WHERE REQUIRED AND NOTED.

1. EXISTING DRAPER SCREEN, FABRIC AND ROLLER TO BE REPLACED WITH 72-1/2" X 116 FABRIC
2. NEW ELECTRIC ROLL DOWN SCREEN WITH 50" X 80" IMAGE AREA AND 30" EXTRA BLACK DROP TO REPLACE EXISTING DRAPER SCREEN
3. NEW CEILING PROJECTOR, AT EXISTING PROJECTOR LOCATION
4. EXISTING RECESSED CEILING SPEAKERS
5. EXISTING WALL MOUNTED CABINET SPEAKER
6. CAM1 – NEW CEILING MOUNTED PTZ CAMERA, CAT6 CABLE TO BE RUN ABOVE DROP CEILING TO AV CONTROL BOOTH, CABLES TO BE HUNG ON "J" HOOKS
7. NEW WIRELESS MICROPHONE ACTIVE ANTENNAS, MOUNT ABOVE DROP TILE CEILING AT LEAST 3' APART
8. NEW 1" CONDUIT SLEEVES THROUGH WALL FOR CABLE PASS THROUGH ABOVE DROP CEILING, FIRE PROOFING REQUIRE AROUND CONDUITS AND IN CONDUITS AFTER PLENUM CABLE HAS BEEN INSTALLED
9. ADDED DATA JACK AT WALL MOUNTED PTZ CAMERA LOCATIONS FOR FUTURE.
10. NEW ACOUSTIC ABSORPTIVE MATERIAL. BY AVC..

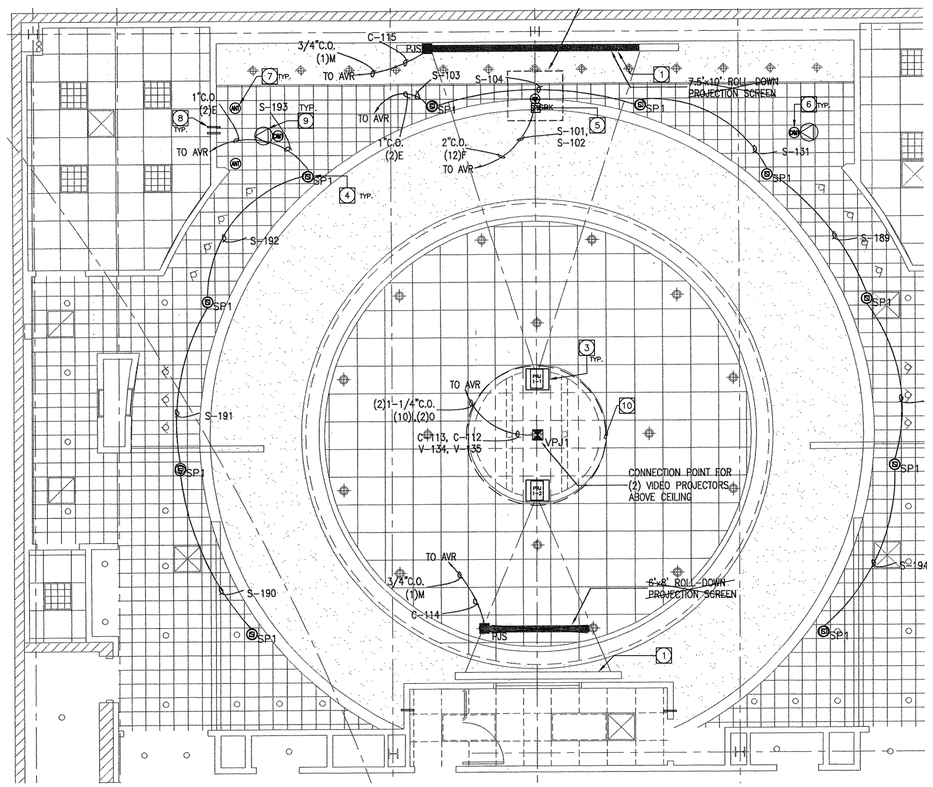

BOARDROOM AE107 AV CEILING PLAN (1)

SCALE: NOT TO SCALE

ENGINEER

tk1sc COLLABORATIVE

15231 Laguna Canyon Road, Suite 100
Irvine, California 92618
949.751.5800 www.tk1sc.com

(Project Manager- Scott Tonelson)
tk1sc Job #: 2015-0490

This and all other project documents and all ideas, aesthetics and designs incorporated therein are instruments of service. All project documents are the registered property of tk1sc and cannot be lawfully used in whole or in part for any project or purpose except as described in the contractual agreement between tk1sc and Client. tk1sc hereby gives formal notice that any such project document use, reproduction or modification (misuse) is not only unlawful but automatically binds all parties involved with misuse to fully indemnify and defend tk1sc and tk1sc's Consultants to the maximum legal extent against all losses, demands, claims or liabilities arising directly or indirectly from project document misuse.

Project documents describe design intent of work and are not a representation of as-built or existing conditions. tk1sc and tk1sc's Consultants make no representations concerning the accuracy of documents and are not responsible for any discrepancies between project documents and the existing conditions.

© Copyright 2016

PROJECT

ORANGE COUNTY FIRE AUTHORITY

ONE FIRE AUTHORITY ROAD
IRVINE, CA 92602

ENGINEER'S STAMP

REVISION INFORMATION

REV.	DESCRIPTION	DATE

DATE 01-05-16 DRAWN BY JS
SCALE NOT TO SCALE CHECKED BY SKT

DRAWING TITLE

BUILDING A
BOARDROOM AE107
AV CEILING PLAN

DRAWING No.

AV-200

PLAN NOTES:

1. EXISTING DRAPER SCREEN, 60" X 80", TO BE RE-USED.
2. NEW CEILING PROJECTOR, AT EXISTING PROJECTOR LOCATION, AV CONTRACTOR TO CONFIRM THROW DISTANCE.
3. EXISTING RECESSED CEILING SPEAKERS.
4. CEILING MICROPHONES, HANG DOWN APPROXIMATELY 8" FROM CEILING, PROVIDED BY AVC.

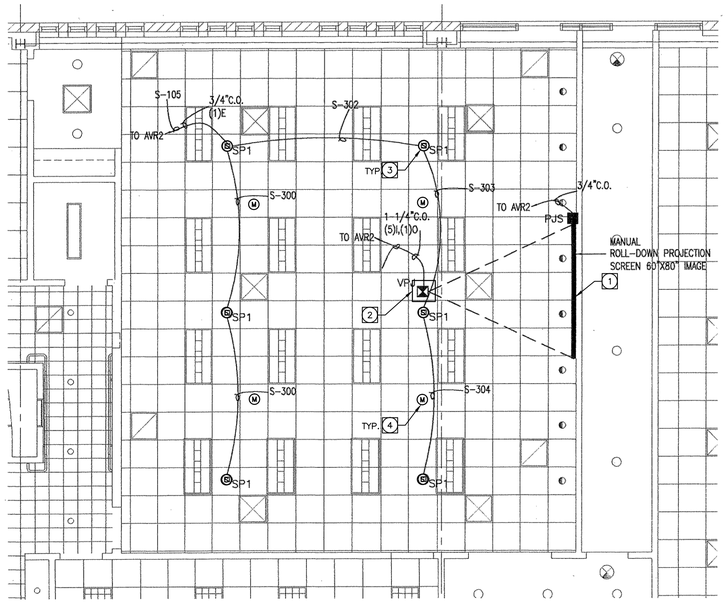

TRAINING AE117 AV CEILING PLAN (1)

SCALE: NOT TO SCALE

ENGINEER

tk1sc COLLABORATIVE
15231 Laguna Canyon Road, Suite 100
Irvine, California 92618
949.751.5800 www.tk1sc.com
(Project Manager- Scott Tonelson)
tk1sc Job #: 2015-0490

This and all other project documents and all ideas, aesthetics and designs incorporated therein are instruments of service. All project documents are the registered property of tk1sc and cannot be lawfully used in whole or in part for any project or purpose except as described in the contractual agreement between tk1sc and Client. tk1sc hereby gives formal notice that any such project document use, reproduction or modification (misuse) is not only unlawful but automatically binds all parties involved with misuse to fully indemnify and defend tk1sc and tk1sc's Consultants to the maximum legal extent against all losses, demands, claims or liabilities arising directly or indirectly from project document misuse.

Project documents describe design intent of work and are not a representation of as-built or existing conditions. tk1sc and tk1sc's Consultants make no representations concerning the accuracy of documents and are not responsible for any discrepancies between project documents and the existing conditions.

© Copyright 2016

PROJECT

ORANGE COUNTY FIRE AUTHORITY

ONE FIRE AUTHORITY ROAD
IRVINE, CA 92602

ENGINEER'S STAMP

REVISION INFORMATION

REV.	DESCRIPTION	DATE

DATE 01-05-16 DRAWN BY JS

SCALE NOT TO SCALE CHECKED BY SKT

DRAWING TITLE

BUILDING A
TRAINING AE117
AV CEILING PLAN

DRAWING No.

AV-201

PLAN NOTES:

1. EXISTING DRAPER SCREEN, 60" X 80", TO BE RE-USED
2. NEW CEILING PROJECTOR, AT EXISTING PROJECTOR LOCATION, AV CONTRACTOR TO CONFIRM THROW DISTANCE
3. EXISTING RECESSED CEILING SPEAKERS
4. NEW CEILING MOUNTED PTZ CAMERA, CAT6 CABLE TO BE RUN ABOVE DROP CEILING TO AV CONTROL BOOTH, CABLES TO BE HUNG ON "J" HOOKS
5. CEILING MICROPHONES, HANG DOWN APPROXIMATELY 8" FROM CEILING, PROVIDED BY AVC.
6. ADDED DATA JACK AT CAMERA LOCATIONS FOR FUTURE.

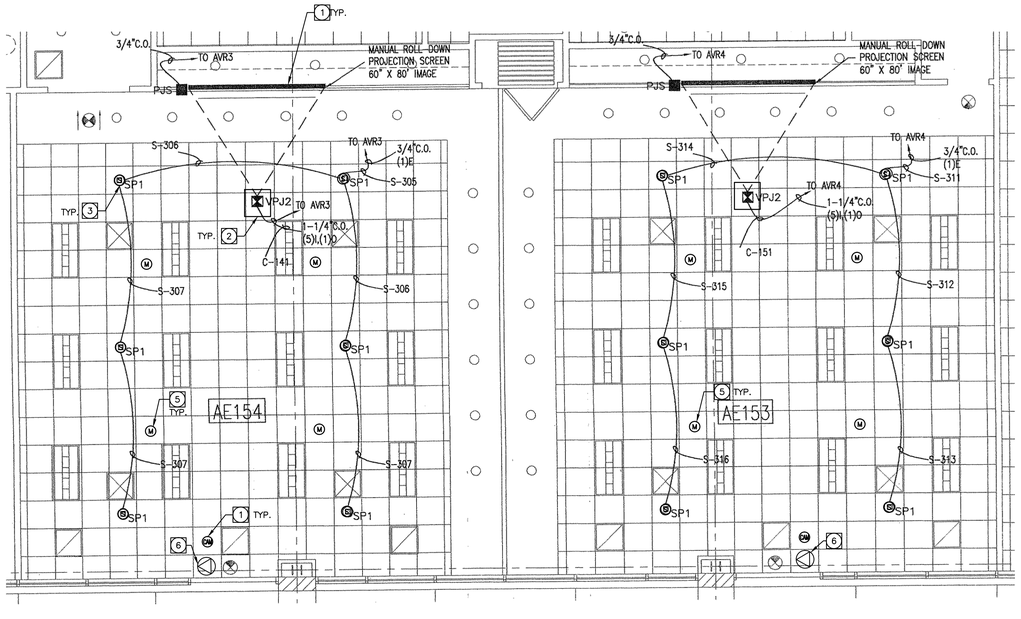

MULTIPURPOSE AE153 & AE154 AV CEILING PLAN (1)

SCALE: NOT TO SCALE

ENGINEER

tk1sc COLLABORATIVE
15231 Laguna Canyon Road, Suite 100
Irvine, California 92618
949.751.5800 www.tk1sc.com
(Project Manager- Scott Tonelson)
tk1sc Job #: 2015-0490

This and all other project documents and all ideas, aesthetics and designs incorporated therein are instruments of service. All project documents are the registered property of tk1sc and cannot be lawfully used in whole or in part for any project or purpose except as described in the contractual agreement between tk1sc and Client. tk1sc hereby gives formal notice that any such project document use, reproduction or modification (misuse) is not only unlawful but automatically binds all parties involved with misuse to fully indemnify and defend tk1sc and tk1sc's Consultants to the maximum legal extent against all losses, demands, claims or liabilities arising directly or indirectly from project document misuse.

Project documents describe design intent of work and are not a representation of as-built or existing conditions. tk1sc and tk1sc's Consultants make no representations concerning the accuracy of documents and are not responsible for any discrepancies between project documents and the existing conditions.

© Copyright 2016

PROJECT

ORANGE COUNTY FIRE AUTHORITY

ONE FIRE AUTHORITY ROAD
IRVINE, CA 92602

ENGINEER'S STAMP

REVISION INFORMATION

REV.	DESCRIPTION	DATE

DATE 01-05-16 DRAWN BY JS
SCALE NOT TO SCALE CHECKED BY SKT

DRAWING TITLE

BUILDING A MULTIPURPOSE AE153 & AE154 AV CEILING PLAN

DRAWING No.

AV-202

PLAN NOTES:

1. EXISTING DRAPER SCREEN, WITH 60" X 80" FABRIC, TO BE RE-USED
2. NEW CEILING PROJECTOR, AT EXISTING PROJECTOR LOCATION, AV CONTRACTOR TO CONFIRM THROW DISTANCE
3. NEW CEILING MOUNTED PTZ CAMERA, CAT6 CABLE TO BE RUN ABOVE DROP CEILING TO AV CONTROL BOOTH, CABLES TO BE HUNG ON "J" HOOKS
4. CEILING MICROPHONES, HANG DOWN APPROXIMATELY 8" FROM CEILING, PROVIDED BY AVC.
5. ADDED DATA JACK AT CAMERA LOCATIONS FOR FUTURE.

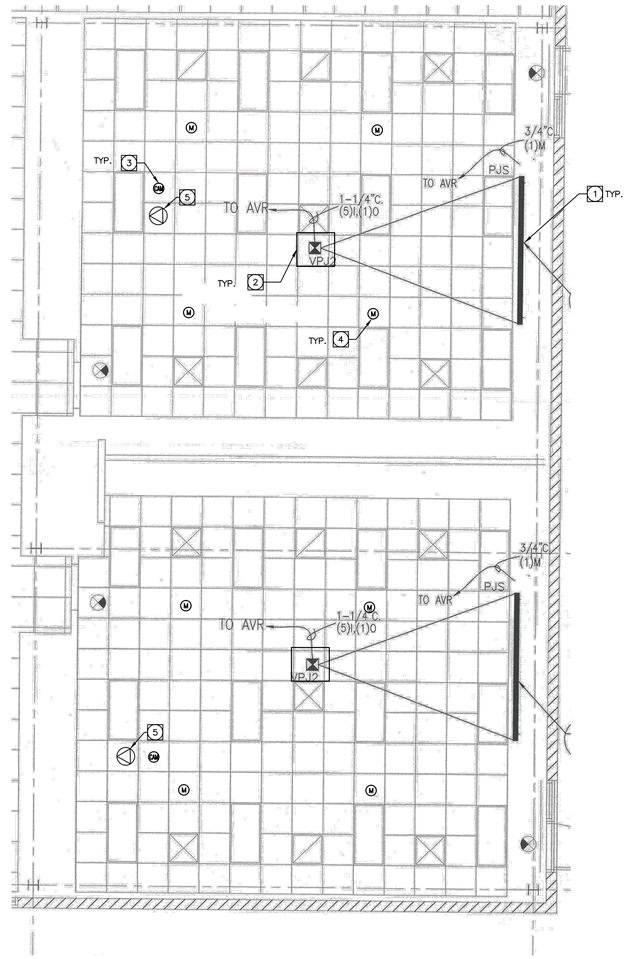

TRAINING D106 & D107 AV CEILING PLAN (1)

SCALE: NOT TO SCALE

ENGINEER

tk1sc COLLABORATIVE
15231 Laguna Canyon Road, Suite 100
Irvine, California 92618
949.751.5900 www.tk1sc.com
(Project Manager- Scott Tonelson)
tk1sc Job #: 2015-0490

This and all other project documents and all ideas, aesthetics and designs incorporated therein are instruments of service. All project documents are the registered property of tk1sc and cannot be lawfully used in whole or in part for any project or purpose except as described in the contractual agreement between tk1sc and Client. tk1sc hereby gives formal notice that any such project document use, reproduction or modification (misuse) is not only unlawful but automatically binds all parties involved with misuse to fully indemnify and defend tk1sc and tk1sc's Consultants to the maximum legal extent against all losses, demands, claims or liabilities arising directly or indirectly from project document misuse.

Project documents describe design intent of work and are not a representation of as-built or existing conditions. tk1sc and tk1sc's Consultants make no representations concerning the accuracy of documents and are not responsible for any discrepancies between project documents and the existing conditions.

© Copyright 2016

PROJECT

ORANGE COUNTY FIRE AUTHORITY

ONE FIRE AUTHORITY ROAD
IRVINE, CA 92602

ENGINEER'S STAMP

REVISION INFORMATION

REV.	DESCRIPTION	DATE

DATE 01-05-16 DRAWN BY JS
SCALE NOT TO SCALE CHECKED BY SKT

DRAWING TITLE

BUILDING D
TRAINING
AV CEILING PLAN

DRAWING No.

AV-203

PLAN NOTES:

1. CABLE, EXTRON XTP/DTP, PLENUM RATED, SHIELDED CAT-6A WITH SHIELDED CONNECTORS. SEE SPECIFICATIONS SECTION 274100.
2. CABLE, DATA, CAT-6, PLENUM RATED. SEE SPECIFICATIONS SECTION.
3. CABLE, HDMI TO HDMI, PRE-TERMINATED. SEE SPECIFICATIONS SECTION 274100.
4. CABLE, VGA & AUDIO, PRE-TERMINATED. SEE SPECIFICATIONS SECTION 274100.
5. CABLE, AUDIO, 2-22 SHIELDED, 22 AWG, STP, PLENUM RATED. SEE SPECIFICATIONS SECTION 274100.
6. CABLE, CONTROL, PLENUM RATED. SEE SPECIFICATIONS SECTION 274100.
7. CABLE, SPEAKER & RELAY, 2-16, 16-AWG, NON-SHIELDED PAIR, PLENUM RATED. SEE SPECIFICATIONS SECTION 274100.
8. CABLE, DVI-D TO HDMI, PRE-TERMINATED. SEE SPECIFICATIONS SECTION 274100.
9. EXISTING CABLES, CATV COAX, SPEAKER, MICROPHONE, VGA, RF
10. CABLE, DVI TO DVI, PRE-TERMINATED. SEE SPECIFICATIONS SECTION 274100.
11. CABLE, DVI TO VGA, PRE-TERMINATED. SEE SPECIFICATIONS SECTION 274100.
12. CABLE, USB TO USB VERIFY CONNECTOR ON DEVICES, PRE-TERMINATED. SEE SPECIFICATIONS SECTION 274100.

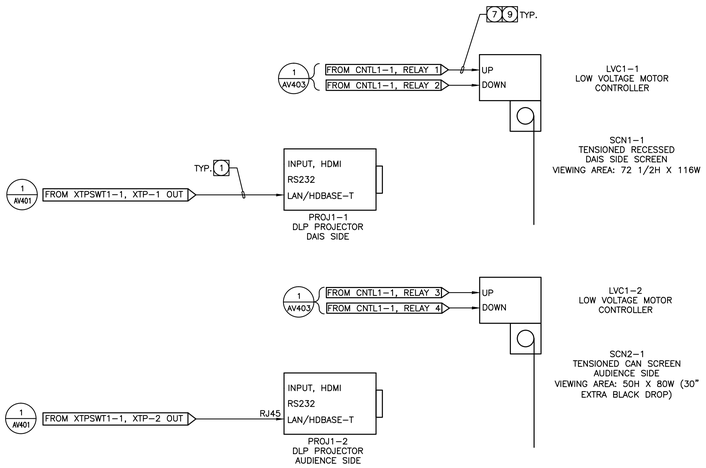

BOARDROOM PROJECTION DISPLAYS - AUDIOVISUAL SYSTEM DIAGRAM (1)

SCALE: N.T.S.

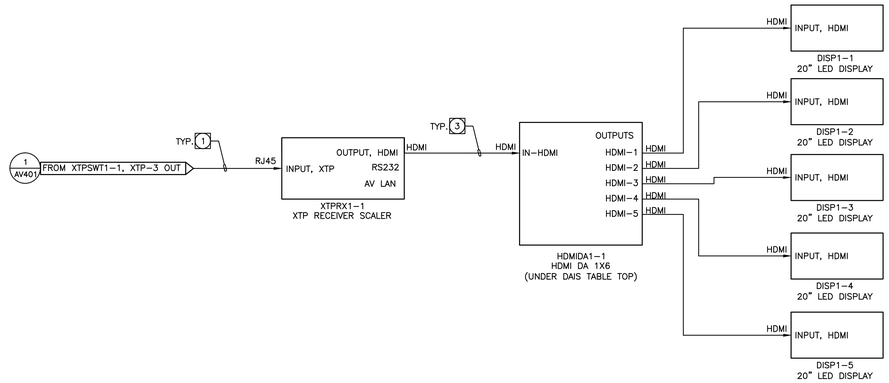

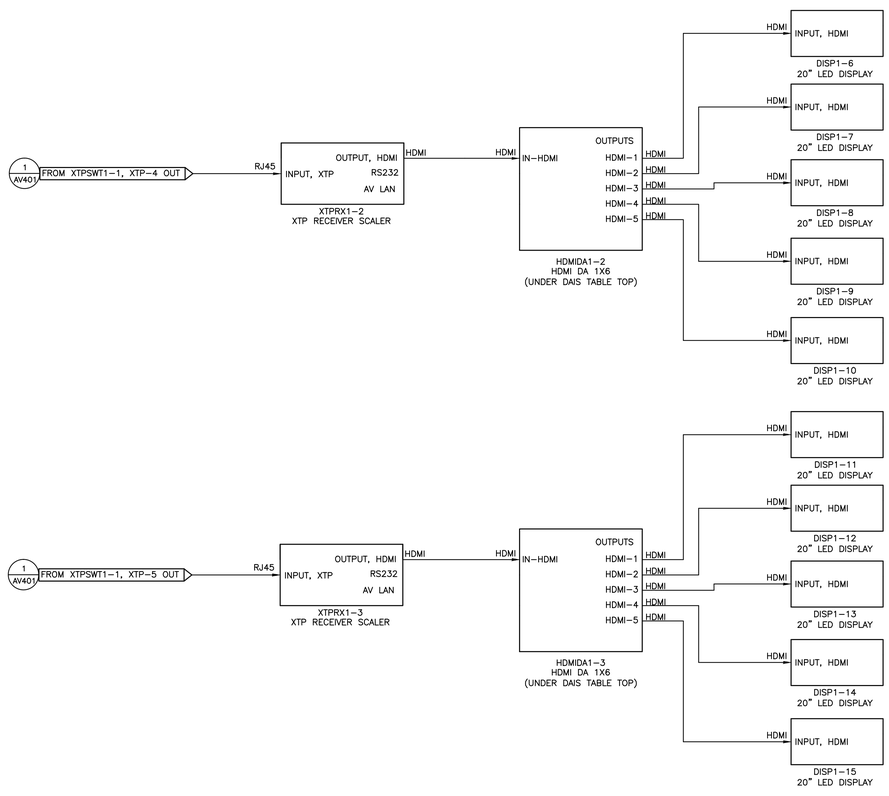

BOARDROOM DAIS DISPLAYS - AUDIOVISUAL SYSTEM DIAGRAM (2)

SCALE: N.T.S.

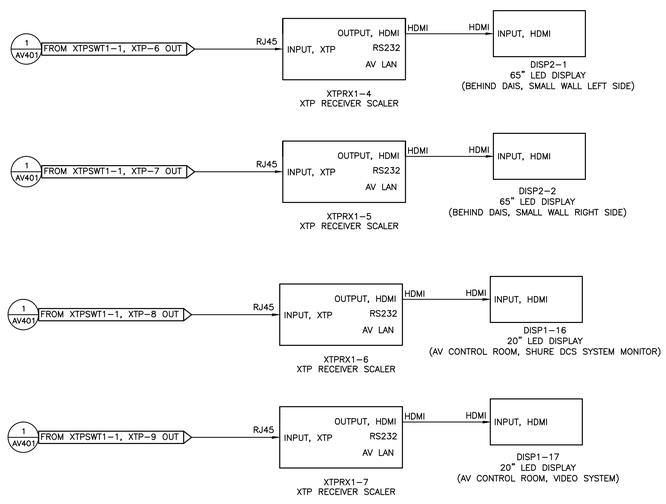

BOARDROOM OTHER DISPLAYS - AUDIOVISUAL SYSTEM DIAGRAM (3)

SCALE: N.T.S.

ENGINEER

tk1sc COLLABORATIVE
15231 Laguna Canyon Road, Suite 100
Irvine, California 92618
949.751.5800 www.tk1sc.com
(Project Manager- Scott Tonelson)
tk1sc Job #: 2015-0490

This and all other project documents and all ideas, aesthetics and designs incorporated therein are instruments of service. All project documents are the registered property of tk1sc and cannot be lawfully used in whole or in part for any project or purpose except as described in the contractual agreement between tk1sc and Client. tk1sc hereby gives formal notice that any such project document use, reproduction or modification (misuse) is not only unlawful but automatically binds all parties involved with misuse to fully indemnify and defend tk1sc and tk1sc's Consultants to the maximum legal extent against all losses, demands, claims or liabilities arising directly or indirectly from project document misuse.

Project documents describe design intent of work and are not a representation of as-built or existing conditions. tk1sc and tk1sc's Consultants make no representations concerning the accuracy of documents and are not responsible for any discrepancies between project documents and the existing conditions.

© Copyright 2016

PROJECT

ORANGE COUNTY FIRE AUTHORITY

ONE FIRE AUTHORITY ROAD
IRVINE, CA 92602

ENGINEER'S STAMP

REVISION INFORMATION

REV.	DESCRIPTION	DATE

DATE 01-05-16 DRAWN BY JS
SCALE N.T.S. CHECKED BY SKT

DRAWING TITLE

AUDIOVISUAL SYSTEMS DIGITAL VIDEO DISPLAYS

DRAWING No.

AV-401.1

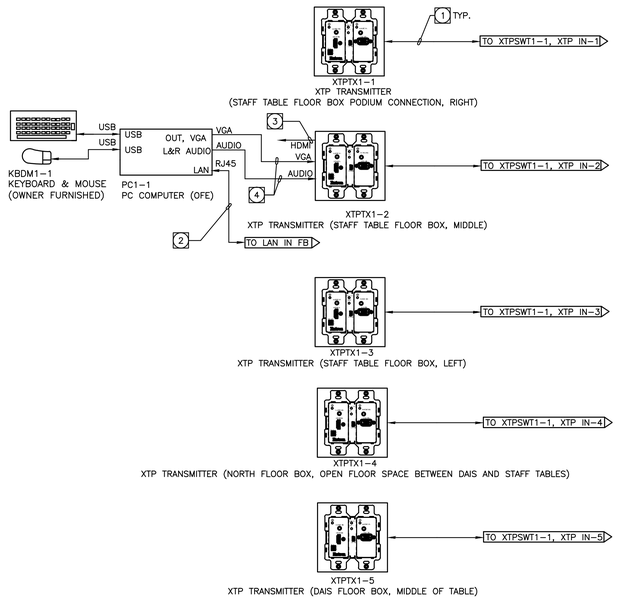

BOARDROOM REMOTE INPUTS - AUDIOVISUAL SYSTEM DIAGRAM (2)

SCALE: N.T.S.

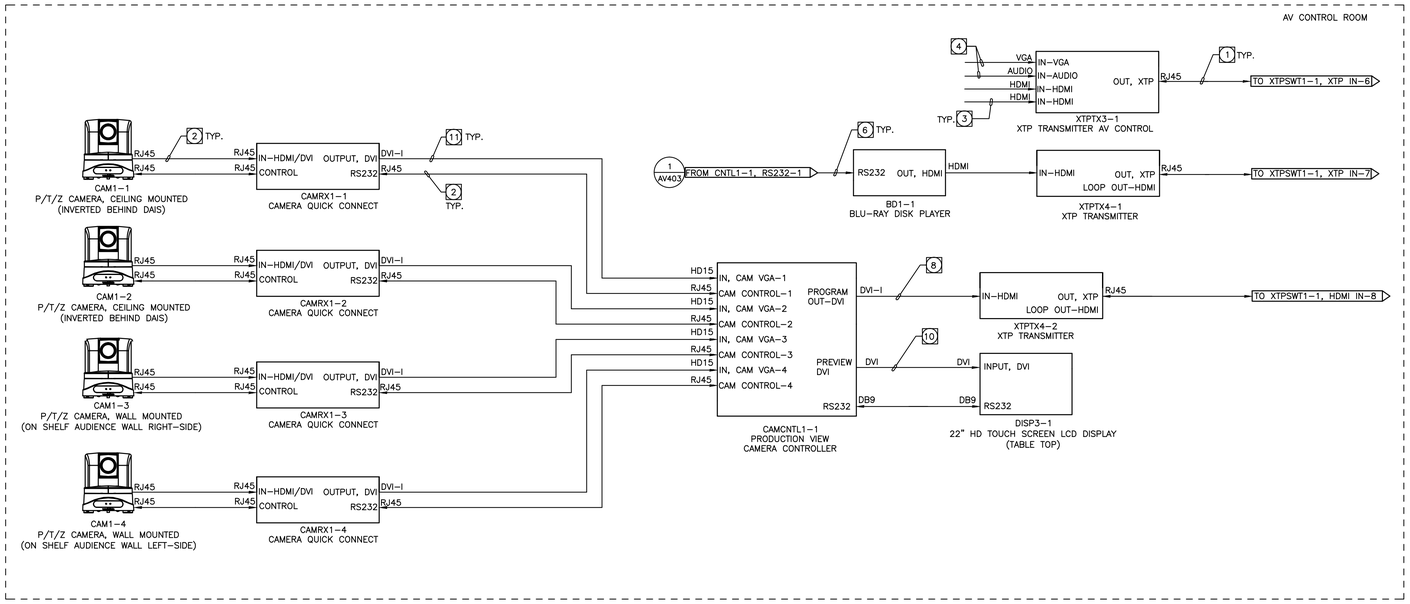

AV CONTROL ROOM VIDEO / CAMERA SYSTEM - AUDIOVISUAL SYSTEM DIAGRAM (3)

SCALE: N.T.S.

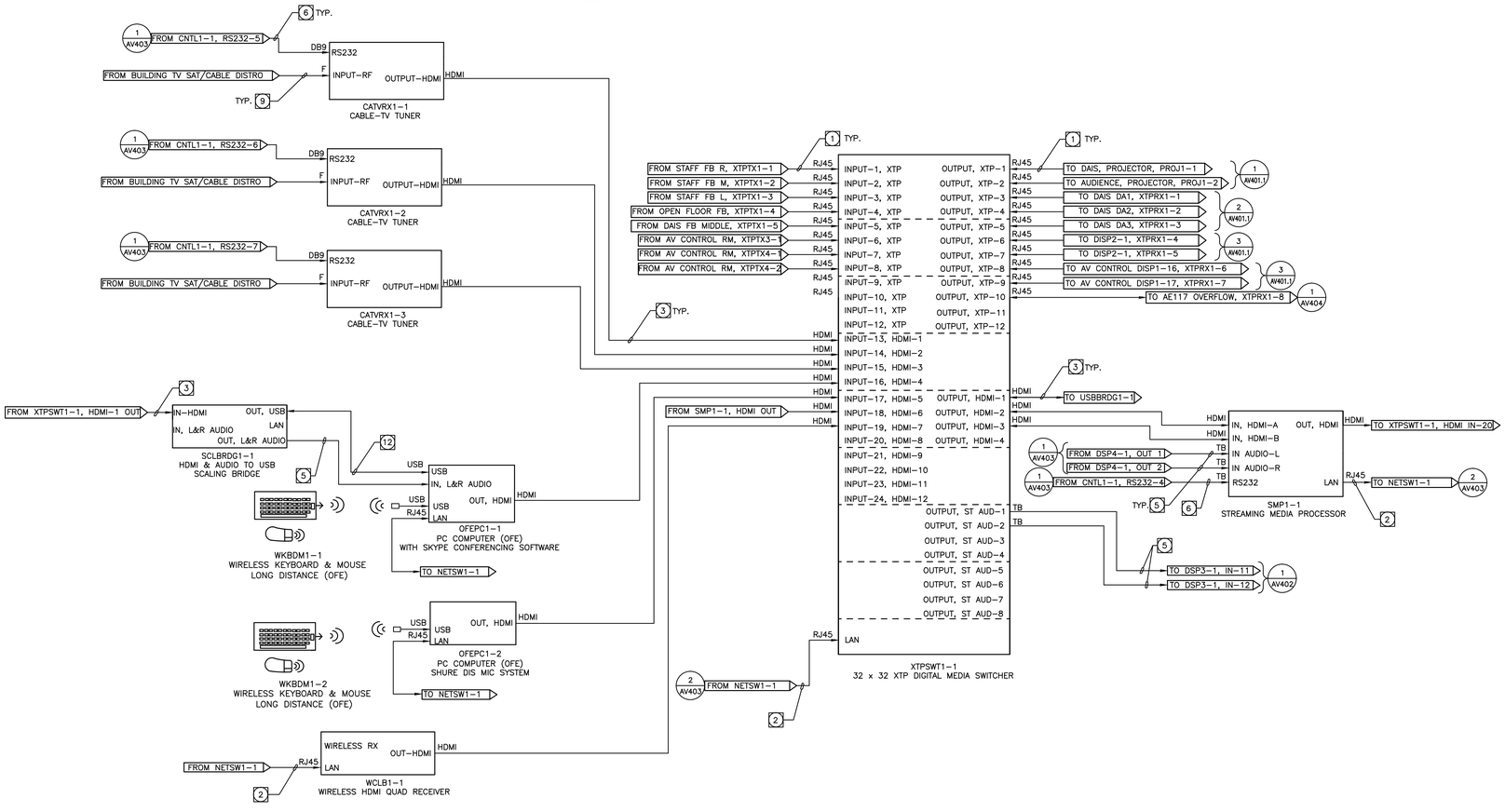

BOARDROOM VIDEO SYSTEM - AUDIOVISUAL SYSTEM DIAGRAM (1)

SCALE: N.T.S.

PLAN NOTES:

1. CABLE, EXTRON XTP/DTP, PLENUM RATED, SHIELDED CAT-6A WITH SHIELDED CONNECTORS. SEE SPECIFICATIONS SECTION 274100.
2. CABLE, DATA, CAT-6, PLENUM RATED. SEE SPECIFICATIONS SECTION.
3. CABLE, HDMI TO HDMI, PRE-TERMINATED. SEE SPECIFICATIONS SECTION 274100.
4. CABLE, VGA & AUDIO, PRE-TERMINATED. SEE SPECIFICATIONS SECTION 274100.
5. CABLE, AUDIO, 2-22 SHIELDED, 22 AWG, STP, PLENUM RATED. SEE SPECIFICATIONS SECTION 274100.
6. CABLE, CONTROL, PLENUM RATED. SEE SPECIFICATIONS SECTION 274100.
7. CABLE, SPEAKER & RELAY, 2-16, 16-AWG, NON-SHIELDED PAIR, PLENUM RATED. SEE SPECIFICATIONS SECTION 274100.
8. CABLE, DVI-D TO HDMI, PRE-TERMINATED. SEE SPECIFICATIONS SECTION 274100.
9. EXISTING CABLES, CATV COAX, SPEAKER, MICROPHONE, VGA, RF
10. CABLE, DVI TO DVI, PRE-TERMINATED. SEE SPECIFICATIONS SECTION 274100.
11. CABLE, DVI TO VGA, PRE-TERMINATED. SEE SPECIFICATIONS SECTION 274100.
12. CABLE, USB TO USB VERIFY CONNECTOR ON DEVICES, PRE-TERMINATED. SEE SPECIFICATIONS SECTION 274100.

ENGINEER

tk1sc COLLABORATIVE
15231 Laguna Canyon Road, Suite 100
Irvine, California 92618
949.751.5900 www.tk1sc.com
(Project Manager- Scott Tonelson)
tk1sc Job #: 2015-0490

This and all other project documents and all ideas, aesthetics and designs incorporated therein are instruments of service. All project documents are the registered property of tk1sc and cannot be lawfully used in whole or in part for any project or purpose except as described in the contractual agreement between tk1sc and Client. tk1sc hereby gives formal notice that any such project document use, reproduction or modification (misuse) is not only unlawful but automatically binds all parties involved with misuse to fully indemnify and defend tk1sc and tk1sc's Consultants to the maximum legal extent against all losses, demands, claims or liabilities arising directly or indirectly from project document misuse.

Project documents describe design intent of work and are not a representation of as-built or existing conditions. tk1sc and tk1sc's Consultants make no representations concerning the accuracy of documents and are not responsible for any discrepancies between project documents and the existing conditions.

© Copyright 2016

PROJECT

ORANGE COUNTY FIRE AUTHORITY

ONE FIRE AUTHORITY ROAD
IRVINE, CA 92602

ENGINEER'S STAMP

REVISION INFORMATION

REV.	DESCRIPTION	DATE

DATE 01-05-16 DRAWN BY JS
SCALE N.T.S. CHECKED BY SKT

DRAWING TITLE

AUDIOVISUAL SYSTEMS DIGITAL VIDEO

DRAWING No.

AV-401

PLAN NOTES:

1. CABLE, EXTRON XTP/DTP, PLENUM RATED, SHIELDED CAT-6A WITH SHIELDED CONNECTORS. SEE SPECIFICATIONS SECTION 274100.
2. CABLE, DATA, CAT-6, PLENUM RATED. SEE OCFA SPECIFICATIONS STANDARDS.
3. CABLE, HDMI TO HDMI, PRE-TERMINATED. SEE SPECIFICATIONS SECTION 274100.
4. CABLE, VGA & AUDIO, PRE-TERMINATED. SEE SPECIFICATIONS SECTION 274100.
5. CABLE, AUDIO, 2-22 SHIELDED, 22 AWG, STP, PLENUM RATED. SEE SPECIFICATIONS SECTION 274100.
6. CABLE, CONTROL, PLENUM RATED. SEE SPECIFICATIONS SECTION 274100.
7. CABLE, SPEAKER & RELAY, 2-16, 16-AWG, NON-SHIELDED PAIR, PLENUM RATED. SEE SPECIFICATIONS SECTION 274100.
8. CABLE, DVI-D TO HDMI, PRE-TERMINATED. SEE SPECIFICATIONS SECTION 274100.
9. EXISTING CABLES, CATV COAX, SPEAKER, MICROPHONE, VGA, RF
10. CABLE, DVI TO DVI, PRE-TERMINATED. SEE SPECIFICATIONS SECTION 274100.
11. CABLE, DVI TO VGA, PRE-TERMINATED. SEE SPECIFICATIONS SECTION 274100.
12. CABLE, USB TO USB VERIFY CONNECTOR ON DEVICES, PRE-TERMINATED. SEE SPECIFICATIONS SECTION 274100.

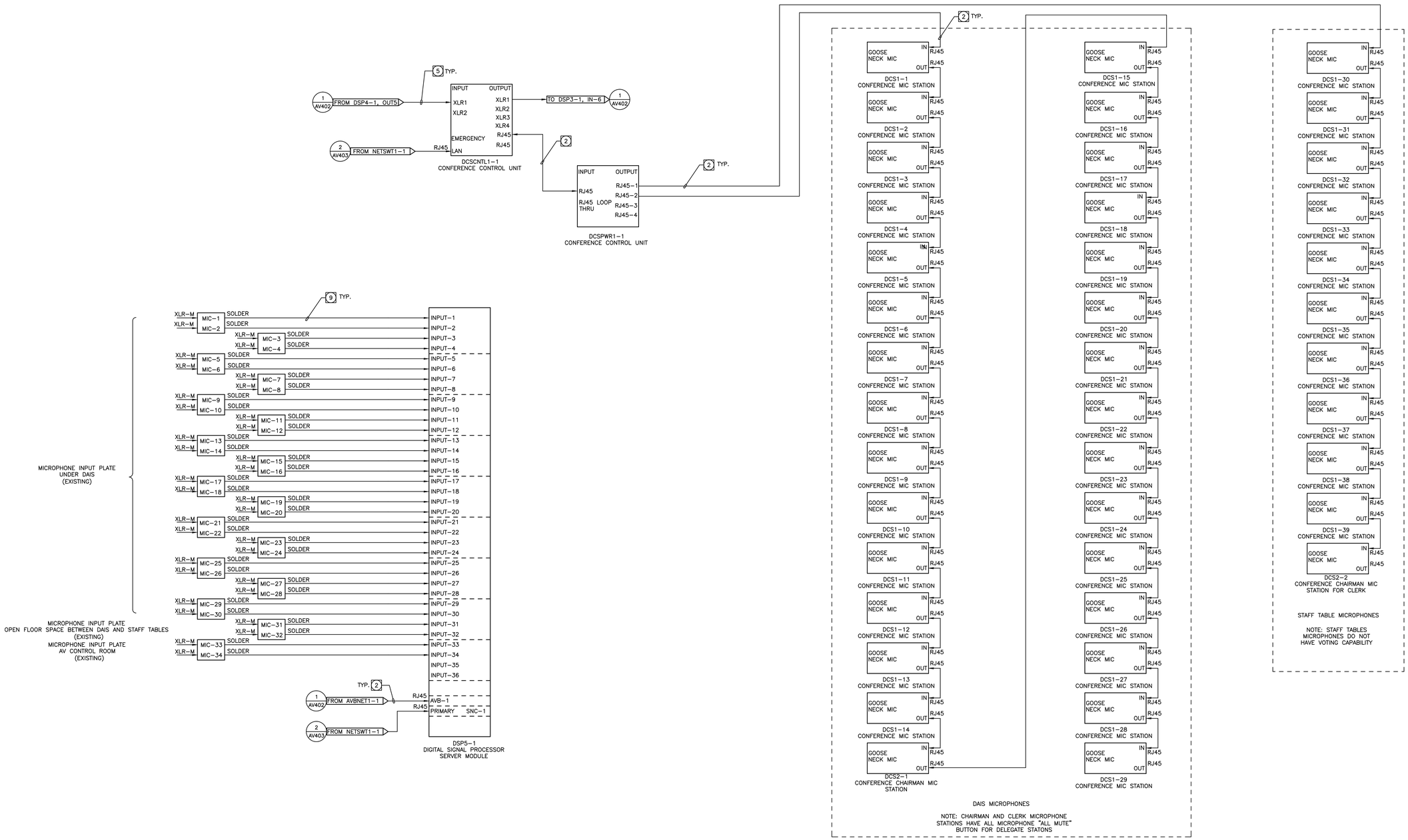

BOARDROOM AUDIO SYSTEM - AUDIOVISUAL SYSTEM DIAGRAM (2)

SCALE: N.T.S.

BOARDROOM AUDIO SYSTEM - AUDIOVISUAL SYSTEM DIAGRAM (1)

SCALE: N.T.S.

ENGINEER

tk1sc COLLABORATIVE
15231 Laguna Canyon Road, Suite 100
Irvine, California 92618
949.751.5800 www.tk1sc.com
(Project Manager- Scott Tonelson)
tk1sc Job #: 2015-0490

This and all other project documents and all ideas, aesthetics and designs incorporated therein are instruments of service. All project documents are the registered property of tk1sc and cannot be lawfully used in whole or in part for any project or purpose except as described in the contractual agreement between tk1sc and Client. tk1sc hereby gives formal notice that any such project document use, reproduction or modification (misuse) is not only unlawful but automatically binds all parties involved with misuse to fully indemnify and defend tk1sc and tk1sc's Consultants to the maximum legal extent against all losses, demands, claims or liabilities arising directly or indirectly from project document misuse.

Project documents describe design intent of work and are not a representation of as-built or existing conditions. tk1sc and tk1sc's Consultants make no representations concerning the accuracy of documents and are not responsible for any discrepancies between project documents and the existing conditions.

© Copyright 2016

PROJECT

ORANGE COUNTY FIRE AUTHORITY

ONE FIRE AUTHORITY ROAD
IRVINE, CA 92602

ENGINEER'S STAMP

REVISION INFORMATION

REV.	DESCRIPTION	DATE

DATE 01-05-16 DRAWN BY JS
SCALE N.T.S. CHECKED BY SKT

DRAWING TITLE

AUDIOVISUAL SYSTEMS DIGITAL AUDIO

DRAWING No.

AV-402.1

PLAN NOTES:

1. CABLE, EXTRON XTP/DTP, PLENUM RATED, SHIELDED CAT-6A WITH SHIELDED CONNECTORS. SEE SPECIFICATIONS SECTION 274100.
2. CABLE, DATA, CAT-6, PLENUM RATED. SEE OCFA SPECIFICATIONS STANDARDS.
3. CABLE, HDMI TO HDMI, PRE-TERMINATED. SEE SPECIFICATIONS SECTION 274100.
4. CABLE, VGA & AUDIO, PRE-TERMINATED. SEE SPECIFICATIONS SECTION 274100.
5. CABLE, AUDIO, 2-22 SHIELDED, 22 AWG, STP, PLENUM RATED. SEE SPECIFICATIONS SECTION 274100.
6. CABLE, CONTROL, PLENUM RATED. SEE SPECIFICATIONS SECTION 274100.
7. CABLE, SPEAKER & RELAY, 2-16, 16-AWG, NON-SHIELDED PAIR, PLENUM RATED. SEE SPECIFICATIONS SECTION 274100.
8. CABLE, DVI-D TO HDMI, PRE-TERMINATED. SEE SPECIFICATIONS SECTION 274100.
9. EXISTING CABLES, CATV COAX, SPEAKER, MICROPHONE, VGA, RF
10. CABLE, DVI TO DVI, PRE-TERMINATED. SEE SPECIFICATIONS SECTION 274100.
11. CABLE, DVI TO VGA, PRE-TERMINATED. SEE SPECIFICATIONS SECTION 274100.
12. CABLE, USB TO USB VERIFY CONNECTOR ON DEVICES, PRE-TERMINATED. SEE SPECIFICATIONS SECTION 274100.
13. CABLE, RF COAXIAL, RG-58 , PLENUM RATED. SEE SPECIFICATIONS SECTION 274100.
14. CABLE, SPEAKER, PLENUM RATED. SEE SPECIFICATIONS SECTION 274100.

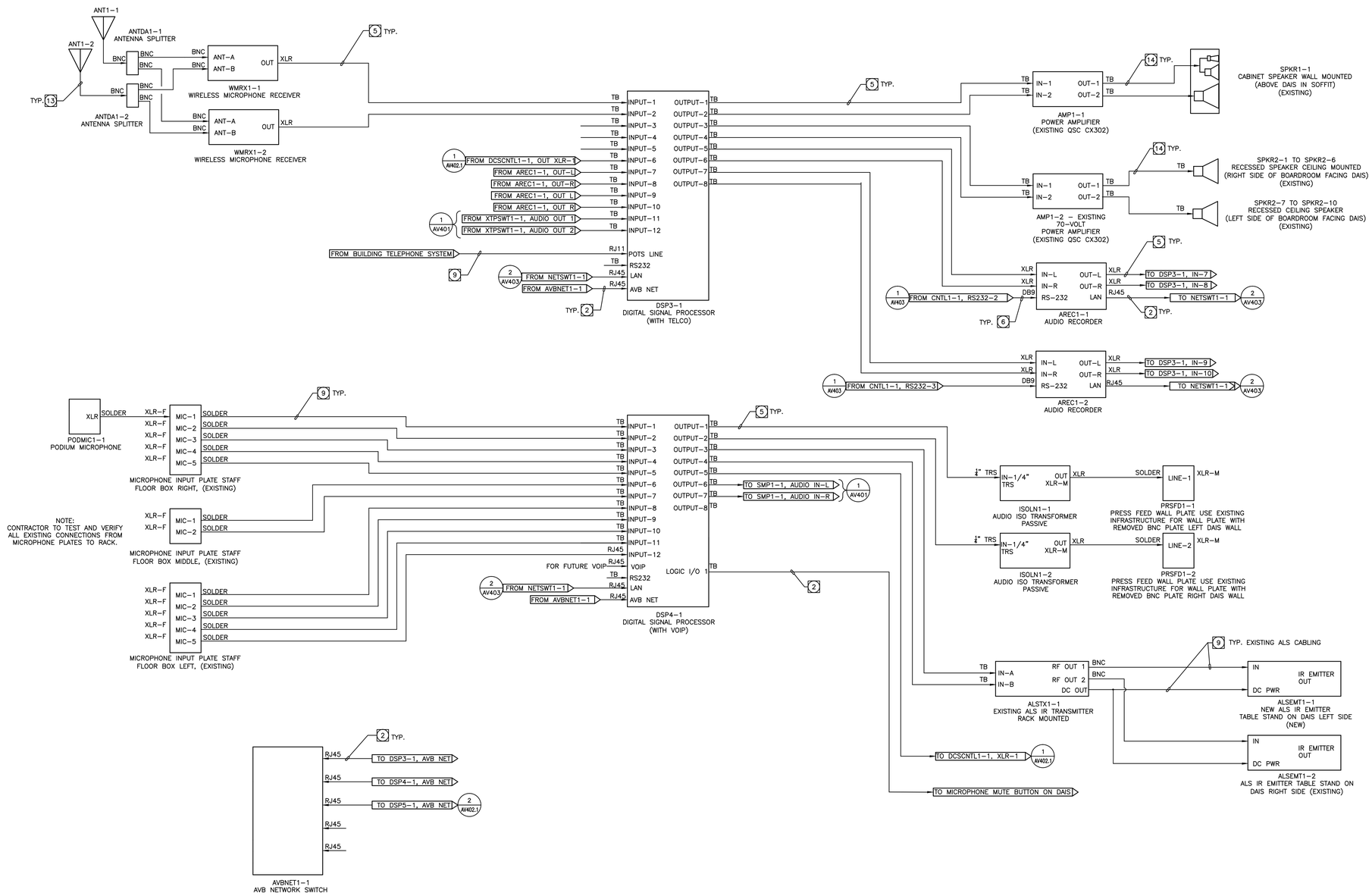

BOARDROOM AUDIO SYSTEM - AUDIOVISUAL SYSTEM DIAGRAM (1)

SCALE: N.T.S.

ENGINEER

tk1sc COLLABORATIVE
15231 Laguna Canyon Road, Suite 100
Irvine, California 92618
949.751.5800 www.tk1sc.com
(Project Manager- Scott Tonelson)
tk1sc Job #: 2015-0490

This and all other project documents and all ideas, aesthetics and designs incorporated therein are instruments of service. All project documents are the registered property of tk1sc and cannot be lawfully used in whole or in part for any project or purpose except as described in the contractual agreement between tk1sc and Client. tk1sc hereby gives formal notice that any such project document use, reproduction or modification (misuse) is not only unlawful but automatically binds all parties involved with misuse to fully indemnify and defend tk1sc and tk1sc's Consultants to the maximum legal extent against all losses, demands, claims or liabilities arising directly or indirectly from project document misuse.

Project documents describe design intent of work and are not a representation of as-built or existing conditions. tk1sc and tk1sc's Consultants make no representations concerning the accuracy of documents and are not responsible for any discrepancies between project documents and the existing conditions.

© Copyright 2016

PROJECT

ORANGE COUNTY FIRE AUTHORITY

ONE FIRE AUTHORITY ROAD
IRVINE, CA 92602

ENGINEER'S STAMP

REVISION INFORMATION

REV.	DESCRIPTION	DATE

DATE 01-05-16 DRAWN BY JS
SCALE N.T.S. CHECKED BY SKT

DRAWING TITLE

AUDIOVISUAL SYSTEMS DIGITAL AUDIO

DRAWING No.

AV-402

PLAN NOTES:

1. CABLE, EXTRON XTP/DTP, PLENUM RATED, SHIELDED CAT-6A WITH SHIELDED CONNECTORS. SEE SPECIFICATIONS SECTION 274100.
2. CABLE, DATA, CAT-6, PLENUM RATED. SEE SPECIFICATIONS SECTION.
3. CABLE, HDMI TO HDMI, PRE-TERMINATED. SEE SPECIFICATIONS SECTION 274100.
4. CABLE, VGA & AUDIO, PRE-TERMINATED. SEE SPECIFICATIONS SECTION 274100.
5. CABLE, AUDIO, 2-22 SHIELDED, 22 AWG, STP, PLENUM RATED. SEE SPECIFICATIONS SECTION 274100.
6. CABLE, CONTROL, PLENUM RATED. SEE SPECIFICATIONS SECTION 274100.
7. CABLE, SPEAKER & RELAY, 2-16, 16-AWG, NON-SHIELDED PAIR, PLENUM RATED. SEE SPECIFICATIONS SECTION 274100.
8. CABLE, DVI-D TO HDMI, PRE-TERMINATED. SEE SPECIFICATIONS SECTION 274100.
9. EXISTING CABLES, CATV COAX, SPEAKER, MICROPHONE, VGA, RF
10. CABLE, DVI TO DVI, PRE-TERMINATED. SEE SPECIFICATIONS SECTION 274100.
11. CABLE, DVI TO VGA, PRE-TERMINATED. SEE SPECIFICATIONS SECTION 274100.
12. CABLE, USB TO USB VERIFY CONNECTOR ON DEVICES, PRE-TERMINATED. SEE SPECIFICATIONS SECTION 274100.

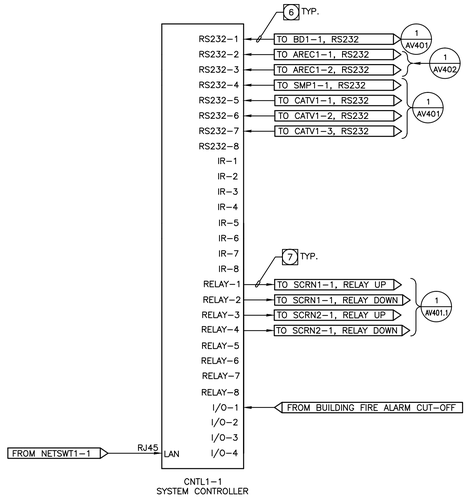

BOARDROOM VIDEO SYSTEM - AUDIOVISUAL CONTROL DIAGRAM (1)

SCALE: N.T.S.

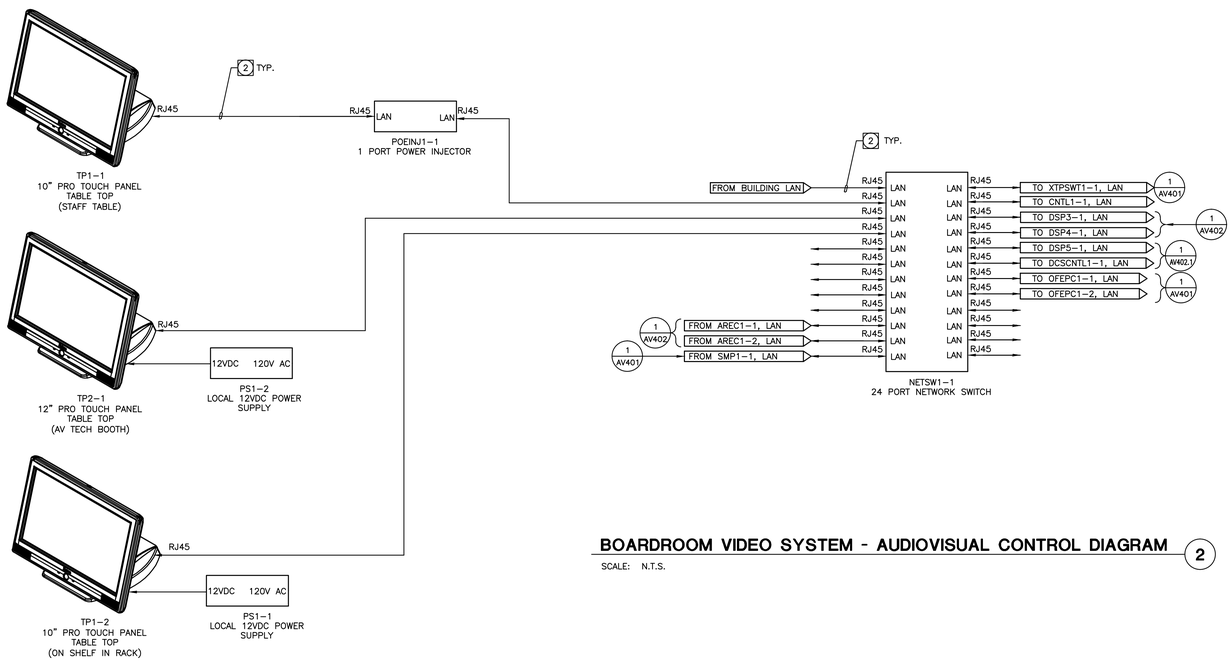

BOARDROOM VIDEO SYSTEM - AUDIOVISUAL CONTROL DIAGRAM (2)

SCALE: N.T.S.

ENGINEER

tk1sc COLLABORATIVE
15231 Laguna Canyon Road, Suite 100
Irvine, California 92618
949.751.5800 www.tk1sc.com
(Project Manager- Scott Tonelson)
tk1sc Job #: 2015-0490

This and all other project documents and all ideas, aesthetics and designs incorporated therein are instruments of service. All project documents are the registered property of tk1sc and cannot be lawfully used in whole or in part for any project or purpose except as described in the contractual agreement between tk1sc and Client. tk1sc hereby gives formal notice that any such project document use, reproduction or modification (misuse) is not only unlawful but automatically binds all parties involved with misuse to fully indemnify and defend tk1sc and tk1sc's Consultants to the maximum legal extent against all losses, demands, claims or liabilities arising directly or indirectly from project document misuse.

Project documents describe design intent of work and are not a representation of as-built or existing conditions. tk1sc and tk1sc's Consultants make no representations concerning the accuracy of documents and are not responsible for any discrepancies between project documents and the existing conditions.

© Copyright 2016

PROJECT

ORANGE COUNTY FIRE AUTHORITY

ONE FIRE AUTHORITY ROAD
IRVINE, CA 92602

ENGINEER'S STAMP

REVISION INFORMATION

REV.	DESCRIPTION	DATE

DATE 01-05-16 DRAWN BY JS
SCALE N.T.S. CHECKED BY SKT

DRAWING TITLE

AUDIOVISUAL SYSTEMS CONTROL

DRAWING No.

AV-403

PLAN NOTES:

1. CABLE, EXTRON XTP/DTP, PLENUM RATED, SHIELDED CAT-6A WITH SHIELDED CONNECTORS. SEE SPECIFICATIONS SECTION 274100.
2. CABLE, DATA, CAT-6, PLENUM RATED. SEE SPECIFICATIONS SECTION.
3. CABLE, HDMI TO HDMI, PRE-TERMINATED. SEE SPECIFICATIONS SECTION 274100.
4. CABLE, VGA & AUDIO, PRE-TERMINATED. SEE SPECIFICATIONS SECTION 274100.
5. CABLE, AUDIO, 2-22 SHIELDED, 22 AWG, STP, PLENUM RATED. SEE SPECIFICATIONS SECTION 274100.
6. CABLE, CONTROL, PLENUM RATED. SEE SPECIFICATIONS SECTION 274100.
7. CABLE, SPEAKER & RELAY, 2-16, 16-AWG, NON-SHIELDED PAIR, PLENUM RATED. SEE SPECIFICATIONS SECTION 274100.
8. CABLE, DVI-D TO HDMI, PRE-TERMINATED. SEE SPECIFICATIONS SECTION 274100.
9. EXISTING CABLES, CATV COAX, SPEAKER, MICROPHONE, VGA, RF
10. CABLE, DVI TO DVI, PRE-TERMINATED. SEE SPECIFICATIONS SECTION 274100.
11. CABLE, DVI TO VGA, PRE-TERMINATED. SEE SPECIFICATIONS SECTION 274100.
12. CABLE, USB TO USB VERIFY CONNECTOR ON DEVICES, PRE-TERMINATED. SEE SPECIFICATIONS SECTION 274100.
13. CABLE, SPEAKER, PLENUM RATED. SEE SPECIFICATIONS SECTION 274100.

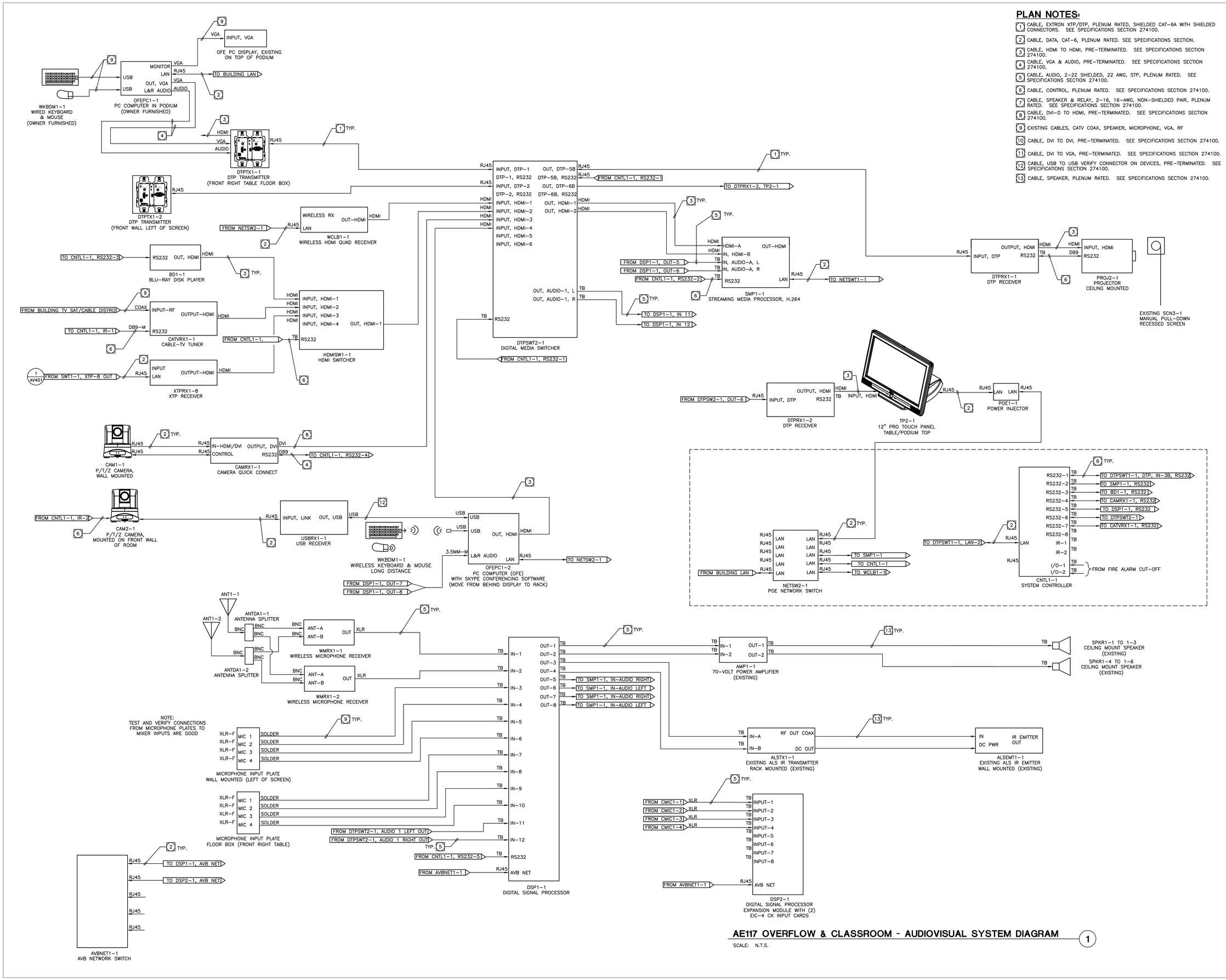

AE117 OVERFLOW & CLASSROOM - AUDIOVISUAL SYSTEM DIAGRAM (1)

SCALE: N.T.S.

ENGINEER

tk1sc COLLABORATIVE
15231 Laguna Canyon Road, Suite 100
Irvine, California 92618
949.751.5800 www.tk1sc.com
(Project Manager- Scott Tonelson)
tk1sc Job #: 2015-0490

This and all other project documents and all ideas, aesthetics and designs incorporated therein are instruments of service. All project documents are the registered property of tk1sc and cannot be lawfully used in whole or in part for any project or purpose except as described in the contractual agreement between tk1sc and Client. tk1sc hereby gives formal notice that any such project document use, reproduction or modification (misuse) is not only unlawful but automatically binds all parties involved with misuse to fully indemnify and defend tk1sc and tk1sc's Consultants to the maximum legal extent against all losses, demands, claims or liabilities arising directly or indirectly from project document misuse.

Project documents describe design intent of work and are not a representation of as-built or existing conditions. tk1sc and tk1sc's Consultants make no representations concerning the accuracy of documents and are not responsible for any discrepancies between project documents and the existing conditions.

© Copyright 2016

PROJECT

ORANGE COUNTY FIRE AUTHORITY

ONE FIRE AUTHORITY ROAD
IRVINE, CA 92602

ENGINEER'S STAMP

REVISION INFORMATION

REV.	DESCRIPTION	DATE

DATE 01-05-16 DRAWN BY JS
SCALE N.T.S. CHECKED BY SKT

DRAWING TITLE

AUDIOVISUAL SYSTEMS
VIDEO, AUDIO,
CONTROL
AE117

DRAWING No.

AV-404

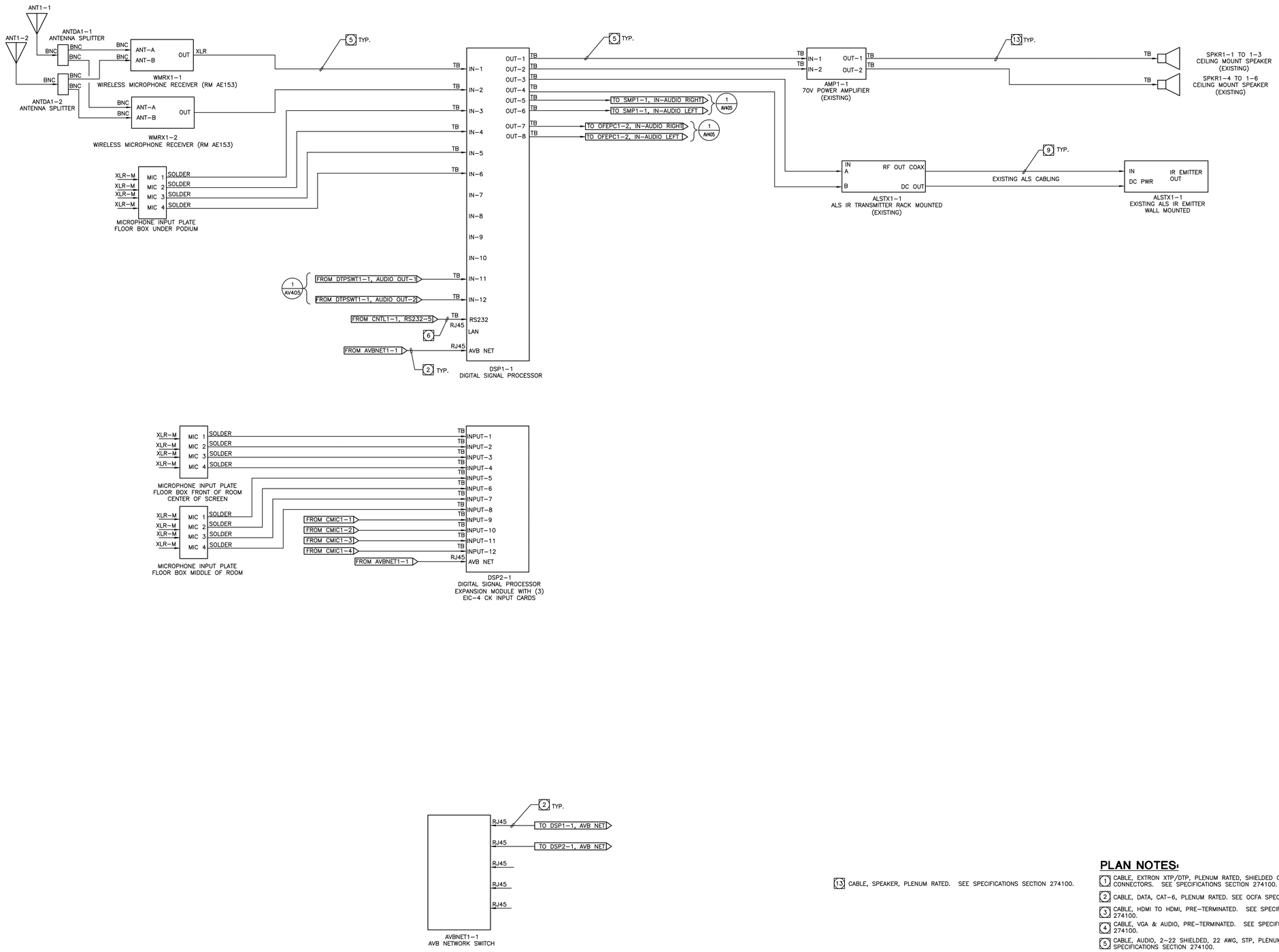

13 CABLE, SPEAKER, PLENUM RATED. SEE SPECIFICATIONS SECTION 274100.

PLAN NOTES:

1. CABLE, EXTRON XTP/DTP, PLENUM RATED, SHIELDED CAT-6A WITH SHIELDED CONNECTORS. SEE SPECIFICATIONS SECTION 274100.
2. CABLE, DATA, CAT-6, PLENUM RATED. SEE OCFA SPECIFICATIONS STANDARDS.
3. CABLE, HDMI TO HDMI, PRE-TERMINATED. SEE SPECIFICATIONS SECTION 274100.
4. CABLE, VGA & AUDIO, PRE-TERMINATED. SEE SPECIFICATIONS SECTION 274100.
5. CABLE, AUDIO, 2-22 SHIELDED, 22 AWG, STP, PLENUM RATED. SEE SPECIFICATIONS SECTION 274100.
6. CABLE, CONTROL, PLENUM RATED. SEE SPECIFICATIONS SECTION 274100.
7. CABLE, SPEAKER & RELAY, 2-16, 16-AWG, NON-SHIELDED PAIR, PLENUM RATED. SEE SPECIFICATIONS SECTION 274100.
8. CABLE, DVI-D TO HDMI, PRE-TERMINATED. SEE SPECIFICATIONS SECTION 274100.
9. EXISTING CABLES, CATV COAX, SPEAKER, MICROPHONE, VGA, RF
10. CABLE, DVI TO DVI, PRE-TERMINATED. SEE SPECIFICATIONS SECTION 274100.
11. CABLE, DVI TO VGA, PRE-TERMINATED. SEE SPECIFICATIONS SECTION 274100.
12. CABLE, USB TO USB VERIFY CONNECTOR ON DEVICES, PRE-TERMINATED. SEE SPECIFICATIONS SECTION 274100.

AUDIOVISUAL SYSTEMS DIAGRAM VIDEO, AUDIO, CONTROL, CLASSROOMS AE153 (1)

N.T.S.

ENGINEER

tk1sc COLLABORATIVE
15231 Laguna Canyon Road, Suite 100
Irvine, California 92618
949.751.5800 www.tk1sc.com
(Project Manager- Scott Tonelson)
tk1sc Job #: 2015-0490

This and all other project documents and all ideas, aesthetics and designs incorporated therein are instruments of service. All project documents are the registered property of tk1sc and cannot be lawfully used in whole or in part for any project or purpose except as described in the contractual agreement between tk1sc and Client. tk1sc hereby gives formal notice that any such project document use, reproduction or modification (misuse) is not only unlawful but automatically binds all parties involved with misuse to fully indemnify and defend tk1sc and tk1sc's Consultants to the maximum legal extent against all losses, demands, claims or liabilities arising directly or indirectly from project document misuse.

Project documents describe design intent of work and are not a representation of as-built or existing conditions. tk1sc and tk1sc's Consultants make no representations concerning the accuracy of documents and are not responsible for any discrepancies between project documents and the existing conditions.

© Copyright 2016

PROJECT

ORANGE COUNTY FIRE AUTHORITY

ONE FIRE AUTHORITY ROAD
IRVINE, CA 92602

ENGINEER'S STAMP

REVISION INFORMATION

REV.	DESCRIPTION	DATE

DATE	01-05-16	DRAWN BY	JS
SCALE	N.T.S.	CHECKED BY	SKT

DRAWING TITLE

AUDIOVISUAL SYSTEMS AUDIO DIAGRAM CLASSROOM AE153

DRAWING No.

AV-405.1

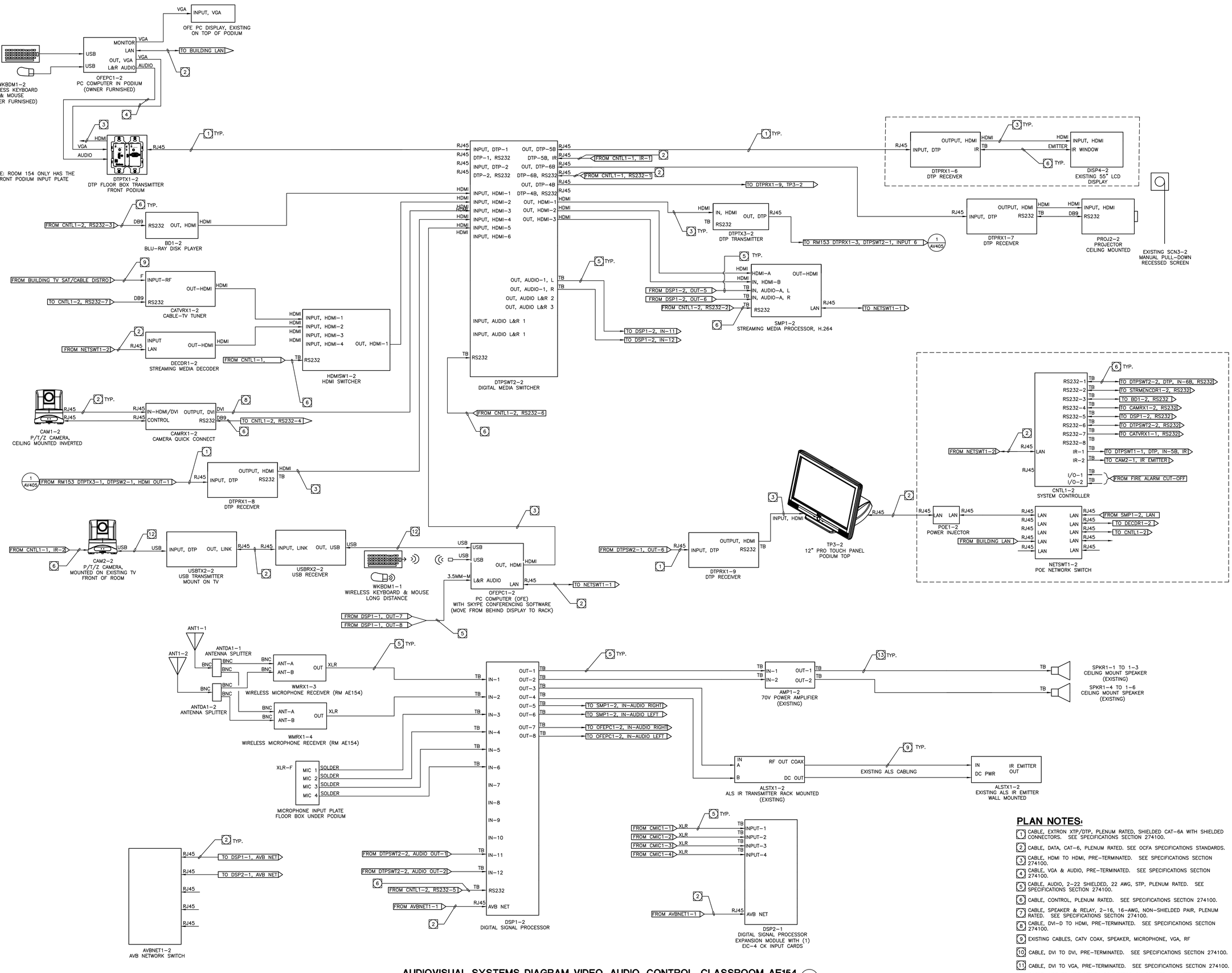

AUDIOVISUAL SYSTEMS DIAGRAM VIDEO, AUDIO, CONTROL, CLASSROOM AE154 (1)

N.T.S.

PLAN NOTES:

1. CABLE, EXTRON XTP/DTP, PLENUM RATED, SHIELDED CAT-6A WITH SHIELDED CONNECTORS. SEE SPECIFICATIONS SECTION 274100.
2. CABLE, DATA, CAT-6, PLENUM RATED. SEE OCFA SPECIFICATIONS STANDARDS.
3. CABLE, HDMI TO HDMI, PRE-TERMINATED. SEE SPECIFICATIONS SECTION 274100.
4. CABLE, VGA & AUDIO, PRE-TERMINATED. SEE SPECIFICATIONS SECTION 274100.
5. CABLE, AUDIO, 2-22 SHIELDED, 22 AWG, STP, PLENUM RATED. SEE SPECIFICATIONS SECTION 274100.
6. CABLE, CONTROL, PLENUM RATED. SEE SPECIFICATIONS SECTION 274100.
7. CABLE, SPEAKER & RELAY, 2-16, 16-AWG, NON-SHIELDED PAIR, PLENUM RATED. SEE SPECIFICATIONS SECTION 274100.
8. CABLE, DVI-D TO HDMI, PRE-TERMINATED. SEE SPECIFICATIONS SECTION 274100.
9. EXISTING CABLES, CATV COAX, SPEAKER, MICROPHONE, VGA, RF
10. CABLE, DVI TO DVI, PRE-TERMINATED. SEE SPECIFICATIONS SECTION 274100.
11. CABLE, DVI TO VGA, PRE-TERMINATED. SEE SPECIFICATIONS SECTION 274100.
12. CABLE, USB TO USB VERIFY CONNECTOR ON DEVICES, PRE-TERMINATED. SEE SPECIFICATIONS SECTION 274100.
13. CABLE, SPEAKER, PLENUM RATED. SEE SPECIFICATIONS SECTION 274100.

ENGINEER

tk1sc COLLABORATIVE
15231 Laguna Canyon Road, Suite 100
Irvine, California 92618
949.751.5800 www.tk1sc.com
(Project Manager- Scott Tonelson)
tk1sc Job #: 2015-0490

This and all other project documents and all ideas, aesthetics and designs incorporated therein are instruments of service. All project documents are the registered property of tk1sc and cannot be lawfully used in whole or in part for any project or purpose except as described in the contractual agreement between tk1sc and Client. tk1sc hereby gives formal notice that any such project document use, reproduction or modification (misuse) is not only unlawful but automatically binds all parties involved with misuse to fully indemnify and defend tk1sc and tk1sc's Consultants to the maximum legal extent against all losses, demands, claims or liabilities arising directly or indirectly from project document misuse.

Project documents describe design intent of work and are not a representation of as-built or existing conditions. tk1sc and tk1sc's Consultants make no representations concerning the accuracy of documents and are not responsible for any discrepancies between project documents and the existing conditions.

© Copyright 2016

PROJECT

ORANGE COUNTY FIRE AUTHORITY

ONE FIRE AUTHORITY ROAD
IRVINE, CA 92602

ENGINEER'S STAMP

REVISION INFORMATION

REV.	DESCRIPTION	DATE

DATE 01-05-16 DRAWN BY JS
SCALE N.T.S. CHECKED BY SKT

DRAWING TITLE

AUDIOVISUAL SYSTEMS DIAGRAM CLASSROOM AE154

DRAWING No.

AV-405.2

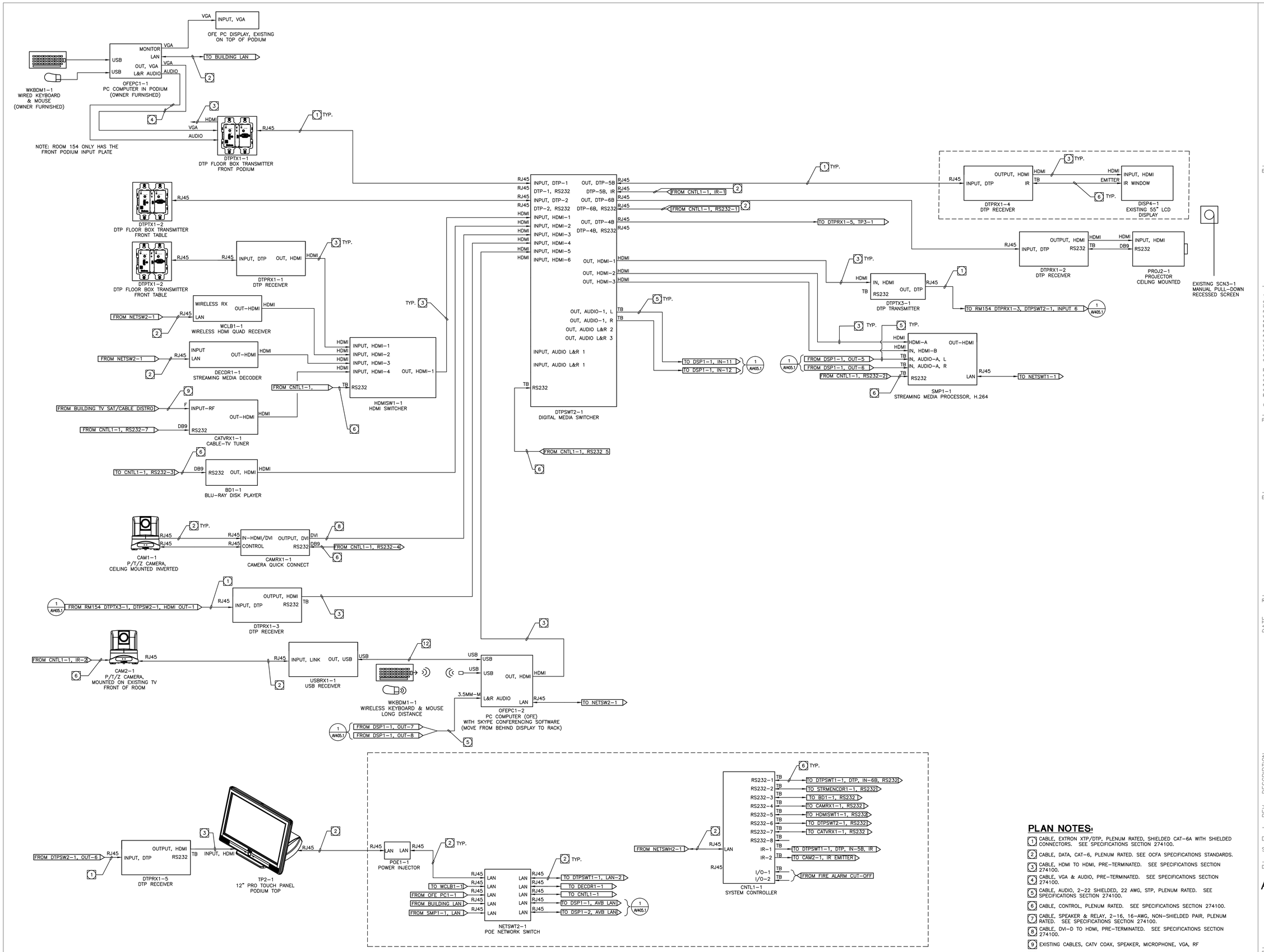

AUDIOVISUAL SYSTEMS DIAGRAM VIDEO, CONTROL, CLASSROOMS AE153

N.T.S.

1

PLAN NOTES:

1. CABLE, EXTRON XTP/DTP, PLENUM RATED, SHIELDED CAT-6A WITH SHIELDED CONNECTORS. SEE SPECIFICATIONS SECTION 274100.
2. CABLE, DATA, CAT-6, PLENUM RATED. SEE OCFA SPECIFICATIONS STANDARDS.
3. CABLE, HDMI TO HDMI, PRE-TERMINATED. SEE SPECIFICATIONS SECTION 274100.
4. CABLE, VGA & AUDIO, PRE-TERMINATED. SEE SPECIFICATIONS SECTION 274100.
5. CABLE, AUDIO, 2-22 SHIELDED, 22 AWG, STP, PLENUM RATED. SEE SPECIFICATIONS SECTION 274100.
6. CABLE, CONTROL, PLENUM RATED. SEE SPECIFICATIONS SECTION 274100.
7. CABLE, SPEAKER & RELAY, 2-16, 16-AWG, NON-SHIELDED PAIR, PLENUM RATED. SEE SPECIFICATIONS SECTION 274100.
8. CABLE, DVI-D TO HDMI, PRE-TERMINATED. SEE SPECIFICATIONS SECTION 274100.
9. EXISTING CABLES, CATV COAX, SPEAKER, MICROPHONE, VGA, RF
10. CABLE, DVI TO DVI, PRE-TERMINATED. SEE SPECIFICATIONS SECTION 274100.
11. CABLE, DVI TO VGA, PRE-TERMINATED. SEE SPECIFICATIONS SECTION 274100.
12. CABLE, USB TO USB VERIFY CONNECTOR ON DEVICES, PRE-TERMINATED. SEE SPECIFICATIONS SECTION 274100.

ENGINEER

tk1sc COLLABORATIVE
15231 Laguna Canyon Road, Suite 100
Irvine, California 92618
949.751.5800 www.tk1sc.com
(Project Manager- Scott Tonelson)
tk1sc Job #: 2015-0490

This and all other project documents and all ideas, aesthetics and designs incorporated therein are instruments of service. All project documents are the registered property of tk1sc and cannot be lawfully used in whole or in part for any project or purpose except as described in the contractual agreement between tk1sc and Client. tk1sc hereby gives formal notice that any such project document use, reproduction or modification (misuse) is not only unlawful but automatically binds all parties involved with misuse to fully indemnify and defend tk1sc and tk1sc's Consultants to the maximum legal extent against all losses, demands, claims or liabilities arising directly or indirectly from project document misuse.

Project documents describe design intent of work and are not a representation of as-built or existing conditions. tk1sc and tk1sc's Consultants make no representations concerning the accuracy of documents and are not responsible for any discrepancies between project documents and the existing conditions.

© Copyright 2016

PROJECT

ORANGE COUNTY FIRE AUTHORITY

ONE FIRE AUTHORITY ROAD
IRVINE, CA 92602

ENGINEER'S STAMP

REVISION INFORMATION

REV.	DESCRIPTION	DATE

DATE 01-05-16 DRAWN BY JS
SCALE N.T.S. CHECKED BY SKT

DRAWING TITLE

AUDIOVISUAL SYSTEMS DIAGRAM VIDEO. CONTROL. CLASSROOM AE153

DRAWING No.

AV-405

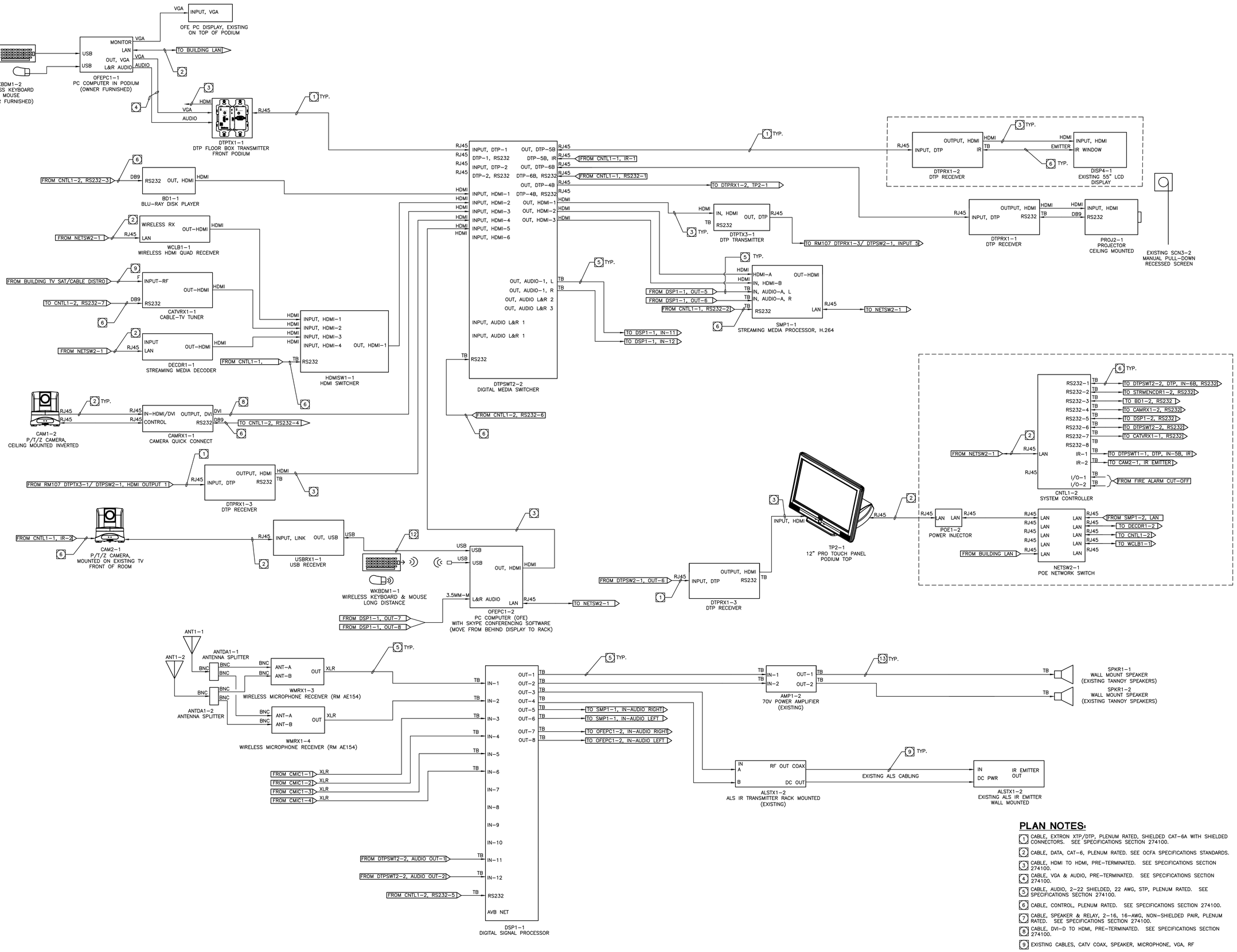

AUDIOVISUAL SYSTEMS DIAGRAM VIDEO, AUDIO, CONTROL, TRAINING CLASSROOMS D106 & D107

N.T.S.

NOTE: ROOMS D106 AND D107 HAVE THE SAME SIGNAL FLOW, THIS IS DRAWN FOR ROOM D106

1

PLAN NOTES:

1. CABLE, EXTRON XTP/DTP, PLENUM RATED, SHIELDED CAT-6A WITH SHIELDED CONNECTORS. SEE SPECIFICATIONS SECTION 274100.
2. CABLE, DATA, CAT-6, PLENUM RATED. SEE OCFA SPECIFICATIONS STANDARDS.
3. CABLE, HDMI TO HDMI, PRE-TERMINATED. SEE SPECIFICATIONS SECTION 274100.
4. CABLE, VGA & AUDIO, PRE-TERMINATED. SEE SPECIFICATIONS SECTION 274100.
5. CABLE, AUDIO, 2-22 SHIELDED, 22 AWG, STP, PLENUM RATED. SEE SPECIFICATIONS SECTION 274100.
6. CABLE, CONTROL, PLENUM RATED. SEE SPECIFICATIONS SECTION 274100.
7. CABLE, SPEAKER & RELAY, 2-16, 16-AWG, NON-SHIELDED PAIR, PLENUM RATED. SEE SPECIFICATIONS SECTION 274100.
8. CABLE, DVI-D TO HDMI, PRE-TERMINATED. SEE SPECIFICATIONS SECTION 274100.
9. EXISTING CABLES, CATV COAX, SPEAKER, MICROPHONE, VGA, RF
10. CABLE, DVI TO DVI, PRE-TERMINATED. SEE SPECIFICATIONS SECTION 274100.
11. CABLE, DVI TO VGA, PRE-TERMINATED. SEE SPECIFICATIONS SECTION 274100.
12. CABLE, USB TO USB VERIFY CONNECTOR ON DEVICES, PRE-TERMINATED. SEE SPECIFICATIONS SECTION 274100.
13. CABLE, SPEAKER, PLENUM RATED. SEE SPECIFICATIONS SECTION 274100.

ENGINEER

tk1sc COLLABORATIVE
15231 Laguna Canyon Road, Suite 100
Irvine, California 92618
949.751.5800 www.tk1sc.com
(Project Manager- Scott Tonelson)
tk1sc Job #: 2015-0490

This and all other project documents and all ideas, aesthetics and designs incorporated therein are instruments of service. All project documents are the registered property of tk1sc and cannot be lawfully used in whole or in part for any project or purpose except as described in the contractual agreement between tk1sc and Client. tk1sc hereby gives formal notice that any such project document use, reproduction or modification (misuse) is not only unlawful but automatically binds all parties involved with misuse to fully indemnify and defend tk1sc and tk1sc's Consultants to the maximum legal extent against all losses, demands, claims or liabilities arising directly or indirectly from project document misuse.

Project documents describe design intent of work and are not a representation of as-built or existing conditions. tk1sc and tk1sc's Consultants make no representations concerning the accuracy of documents and are not responsible for any discrepancies between project documents and the existing conditions.

© Copyright 2016

PROJECT

ORANGE COUNTY FIRE AUTHORITY

ONE FIRE AUTHORITY ROAD
IRVINE, CA 92602

ENGINEER'S STAMP

REVISION INFORMATION

REV.	DESCRIPTION	DATE

DATE 01-05-16 DRAWN BY JS
SCALE N.T.S. CHECKED BY SKT

DRAWING TITLE

AUDIOVISUAL SYSTEMS DIGITAL VIDEO TRAINING CLASSROOMS D106 & D107

DRAWING No.

AV406

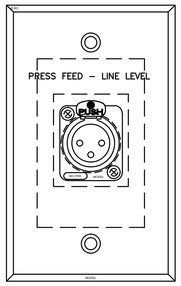

BOARDROOM PRESS FEED WALL PLATE (3)

N.T.S.

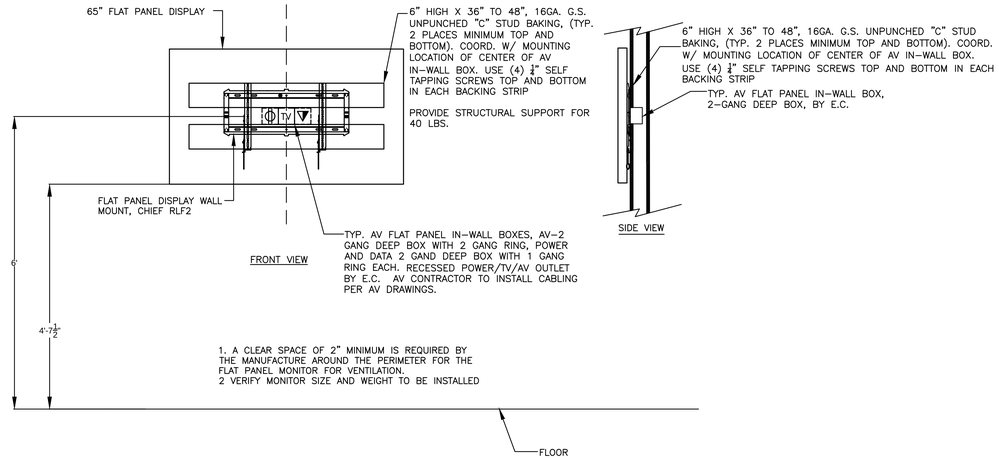

BOARDROOM LED DISPLAY ELEVATION DAIS RIGHT SIDE FROM AUDIANCE (1)

N.T.S.

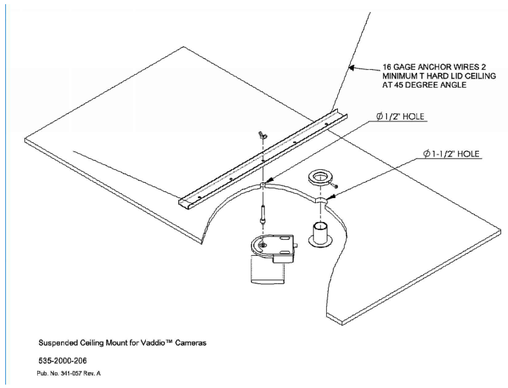

CEILING MOUNT DETAIL FOR VADDIO PTZ CAMERAS (4)

N.T.S.

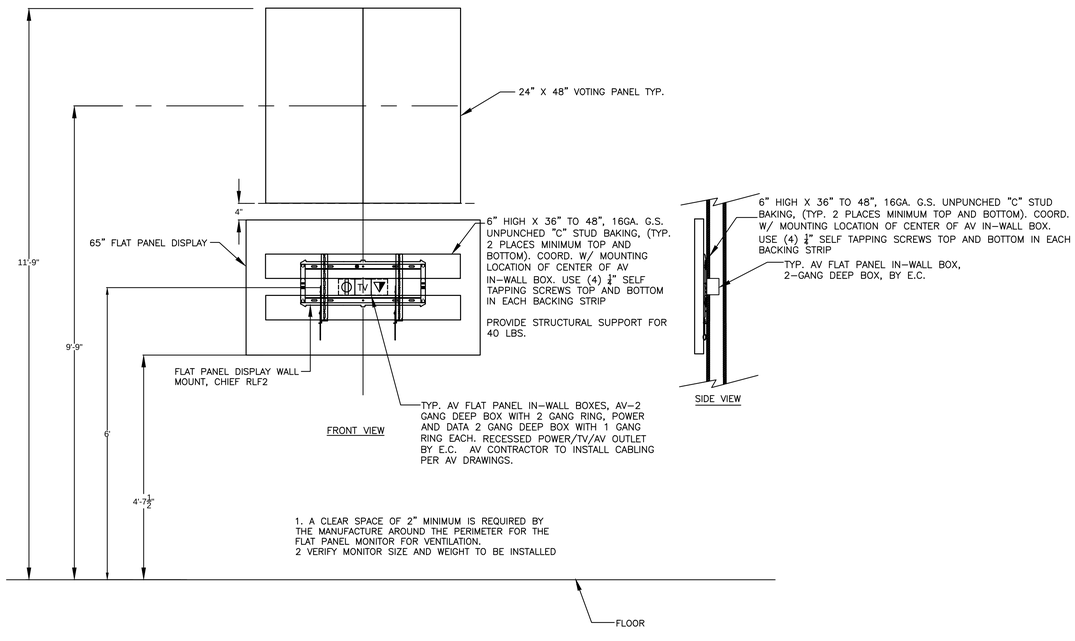

BOARDROOM LED DISPLAY ELEVATION & VOTING PANELS DAIS LEFT SIDE FROM AUDIANCE (2)

N.T.S.

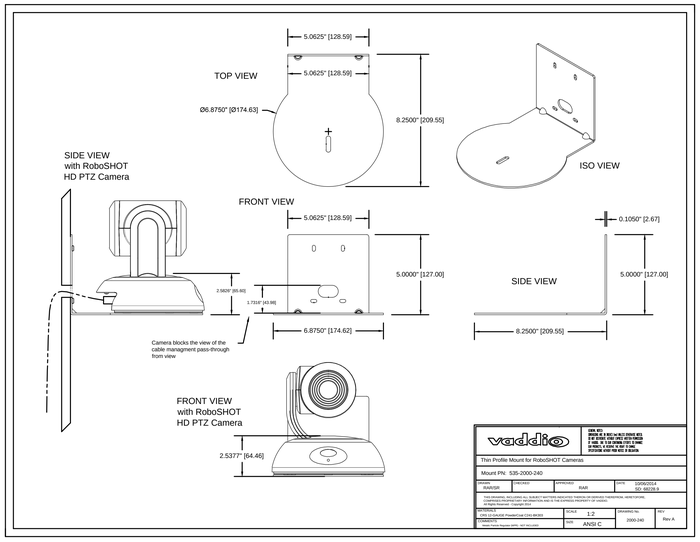

WALL MOUNT DETAIL FOR VADDIO PTZ CAMERAS (4)

N.T.S.

ENGINEER

tk1sc COLLABORATIVE
15231 Laguna Canyon Road, Suite 100
Irvine, California 92618
949.751.5800 www.tk1sc.com
(Project Manager- Scott Tonelson)
tk1sc Job #: 2015-0490

This and all other project documents and all ideas, aesthetics and designs incorporated therein are instruments of service. All project documents are the registered property of tk1sc and cannot be lawfully used in whole or in part for any project or purpose except as described in the contractual agreement between tk1sc and Client. tk1sc hereby gives formal notice that any such project document use, reproduction or modification (misuse) is not only unlawful but automatically binds all parties involved with misuse to fully indemnify and defend tk1sc and tk1sc's Consultants to the maximum legal extent against all losses, demands, claims or liabilities arising directly or indirectly from project document misuse.

Project documents describe design intent of work and are not a representation of as-built or existing conditions. tk1sc and tk1sc's Consultants make no representations concerning the accuracy of documents and are not responsible for any discrepancies between project documents and the existing conditions.

© Copyright 2016

PROJECT

ORANGE COUNTY FIRE AUTHORITY

ONE FIRE AUTHORITY ROAD
IRVINE, CA 92602

ENGINEER'S STAMP

REVISION INFORMATION

REV.	DESCRIPTION	DATE

DATE 03-16-16 DRAWN BY JS
SCALE N.T.S. CHECKED BY SKT

DRAWING TITLE

AUDIOVISUAL SYSTEMS DETAILS

DRAWING No.

AV-601

GENERAL NOTE

1. RACKS ELEVATIONS SHOWN ARE FOR REFERENCE ONLY. AV CONTRACTOR IS RESPONSIBLE FOR DEVELOPING RACK ELEVATIONS AND PROVIDING RACK EQUIPMENT NOT INDICATED IN THE SPECIFICATION OR AVAILABLE IN THE EXISTING RACKS.

25	LOGO	25	43.75
24	WRLSRX1−1 & 1−2	24	42.00
23	CAMRX1−1	23	40.25
22	DSP1−1	22	38.50
21	DSP2−1 / AVBNET1−1	21	36.75
20	PWR1−1	20	35.00
19	SMP1−1 / CNTL1−1	19	33.25
18	ALSMOD1−1	18	31.50
17	CBLRX1−1	17	29.75
16	DTPSWT2−1	16	28.00
15		15	26.25
14		14	24.50
13	STMDCDR1−1	13	22.75
12	BD1−1	12	21.00
11	USBRX1−1 / DTPRX1−2	11	19.25
10	DTPTX1−1 / DTPRX1−1	10	17.50
9	PC2−1	9	15.75
8		8	14.00
7	NETSWHT1−1	7	12.25
6	ALS RX CHARGER	6	10.50
5		5	8.75
4	(OFE)AMP1−1	4	7.00
3		3	5.25
2	DWR1−1	2	3.50
1		1	1.75

AUDIOVISUAL SYSTEMS RACK ELEVATION TRAINING ROOMS 2, 3, 4, 5 TYP. (3)

N.T.S.

44	LOGO	44	77.00
43	VENT−1	43	75.25
42	SMP1−1	42	73.50
41	VENT−1	41	71.75
40	USBBRDG1−1	40	70.00
39	VENT−1	39	68.25
38	OFEPC1−1 (SKYPE)	38	66.50
37		37	64.75
36	VENT−1	36	63.00
35	PWR1−1	35	61.25
34	VENT−1	34	59.50
33	CBLRX1−1	33	57.75
32	TP1−2 SHELF REQUIRED	32	56.00
31		31	54.25
30		30	52.50
29		29	50.75
28		28	49.00
27	VENT−1	27	47.25
26	NETSWHT1−1	26	45.50
25	VENT−1	25	43.75
24	CNTL1−1	24	42.00
23	VENT−1	23	40.25
22	VENT−1	22	38.50
21	VENT−1	21	36.75
20	VENT−1	20	35.00
19	VENT−1	19	33.25
18	VENT−1	18	31.50
17	VENT−1	17	29.75
16	VENT−1	16	28.00
15	XTPSW1−1	15	26.25
14		14	24.50
13		13	22.75
12		12	21.00
11		11	19.25
10		10	17.50
9		9	15.75
8		8	14.00
7		7	12.25
6		6	10.50
5	VENT−1	5	8.75
4	VENT−1	4	7.00
3	DWR1−1	3	5.25
2		2	3.50
1	VENT−1	1	1.75

AUDIOVISUAL SYSTEMS RACK ELEVATION BOARDROOM VIDEO (1)

N.T.S.

44	LOGO	44	77.00
43	VENT−1	43	75.25
42	WRLSRX1−1 & 1−2	42	73.50
41	VENT−1	41	71.75
40	DSP3−1	40	70.00
39	VENT−1	39	68.25
38	DSP4−1	38	66.50
37	VENT−1	37	64.75
36	DSP5−1	36	63.00
35		35	61.25
34	VENT−1	34	59.50
33	PWR1−1	33	57.75
32	VENT−1	32	56.00
31	AVBSWH1−1	31	54.25
30	VENT−1	30	52.50
29	DCSCNTL1−1	29	50.75
28	VENT−1	28	49.00
27	DCSPWR1−1	27	47.25
26		26	45.50
25	VENT−1	25	43.75
24	AREC1−1	24	42.00
23	VENT−1	23	40.25
22	AREC1−2	22	38.50
21	VENT−1	21	36.75
20	OFEPC1−2 (SHURE)	20	35.00
19		19	33.25
18		18	31.50
17	VENT−1	17	29.75
16	VENT−1	16	28.00
15	VENT−1	15	26.25
14	VENT−1	14	24.50
13	VENT−1	13	22.75
12	VENT−1	12	21.00
11	ALS RX CHARGER	11	19.25
10		10	17.50
9		9	15.75
8	DWR1−1	8	14.00
7		7	12.25
6	VENT−1	6	10.50
5	AMP1−1	5	8.75
4		4	7.00
3	VENT−1	3	5.25
2	AMP1−2	2	3.50
1		1	1.75

AUDIOVISUAL SYSTEMS RACK ELEVATION BOARDROOM AUDIO (2)

N.T.S.

44	LOGO	44	77.00
43	VENT−1	43	75.25
42	WRLSRX1−1 & 1−2	42	73.50
41	VENT−1	41	71.75
40	DSP1−1	40	70.00
39	DSP2−1 / AVBNET1−1	39	68.25
38	VENT−1	38	66.50
37	OFEPC2−1	37	64.75
36		36	63.00
35		35	61.25
34	VENT−1	34	59.50
33	PWR1−1	33	57.75
32	VENT−1	32	56.00
31	BD1−1	31	54.25
30	VENT−1	30	52.50
29	CBLRX1−1	29	50.75
28	VENT−1	28	49.00
27	NETSWH1−1	27	47.25
26	VENT−1	26	45.50
25	CNTL1−1	25	43.75
24	VENT−1	24	42.00
23	DTPSWT2−1	23	40.25
22		22	38.50
21		21	36.75
20	VENT−1	20	35.00
19	VENT−1	19	33.25
18	XTPRX1−8	18	31.50
17	VENT−1	17	29.75
16	SMP1−1	16	28.00
15	VENT−1	15	26.25
14	CAMRX1−1	14	24.50
13	VENT−1	13	22.75
12	ALS RX CHARGER	12	21.00
11		11	19.25
10		10	17.50
9	DWR1−1	9	15.75
8		8	14.00
7	VENT−1	7	12.25
6	ALSMOD1−1	6	10.50
5	VENT−1	5	8.75
4	VENT−1	4	7.00
3	AMP1−1	3	5.25
2		2	3.50
1	VENT−1	1	1.75

AUDIOVISUAL SYSTEMS RACK ELEVATION AE117 (3)

N.T.S.

ENGINEER

tk1sc COLLABORATIVE
15231 Laguna Canyon Road, Suite 100
Irvine, California 92618
949.751.5900 www.tk1sc.com
(Project Manager- Scott Tonelson)
tk1sc Job #: 2015-0490

This and all other project documents and all ideas, aesthetics and designs incorporated therein are instruments of service. All project documents are the registered property of tk1sc and cannot be lawfully used in whole or in part for any project or purpose except as described in the contractual agreement between tk1sc and Client. tk1sc hereby gives formal notice that any such project document use, reproduction or modification (misuse) is not only unlawful but automatically binds all parties involved with misuse to fully indemnify and defend tk1sc and tk1sc's Consultants to the maximum legal extent against all losses, demands, claims or liabilities arising directly or indirectly from project document misuse.

Project documents describe design intent of work and are not a representation of as-built or existing conditions. tk1sc and tk1sc's Consultants make no representations concerning the accuracy of documents and are not responsible for any discrepancies between project documents and the existing conditions.

© Copyright 2016

PROJECT

ORANGE COUNTY FIRE AUTHORITY

ONE FIRE AUTHORITY ROAD
IRVINE, CA 92602

ENGINEER'S STAMP

REVISION INFORMATION

REV.	DESCRIPTION	DATE

DATE 01-05-16 DRAWN BY SKT
SCALE N.T.S. CHECKED BY JS

DRAWING TITLE

AUDIOVISUAL SYSTEMS RACK ELEVATIONS

DRAWING No.

AV-501

AUDIOVISUAL SYSTEMS SPECIFICATIONS

PART 1 – GENERAL

1.01 WORK INCLUDED

A. This specification shall apply to all phases of Work hereinafter specified, shown on Drawings, or as required to provide a complete installation of electrical systems for this Project. Work required under this specification, is not limited to just the Audiovisual Systems - refer to Architectural, Electrical, Structural, Landscape, Structural Cabling and/or Mechanical/Plumbing Drawings, as well as all other drawings applicable to this project, which designate the scope of work to be accomplished. The intent of the Drawings and Specifications is to provide a complete and operable Audiovisual Systems that includes all documents that are a part of the Contract.

1. Work Included: Furnish labor, material, services and skilled supervision necessary for the construction, erection, installation, connections, testing, and adjustment of all Audiovisual Systems equipment specified herein, or shown or noted on Drawings, and its delivery to the Orange County Fire Authority (OCFA) complete in all respects functional system ready for use.
2. The Audiovisual Systems Work includes installation or connection of certain materials and equipment furnished by others. Verify installation details, installation and rough-in locations from the actual equipment or from the equipment shop drawings.

B. Audiovisual Systems drawings are diagrammatic, and are intended to convey the scope of work, indicating intended general arrangement of equipment. Follow Drawings in laying out work and verify spaces for installation of materials and equipment based on actual dimensions of equipment furnished.

C. It is the intent of the Drawings and Specifications, for the Contractor to provide and install a complete, fully operational, and tested system.

D. All miscellaneous system components including, but not limited to, plenum cables, speakers, signal converters, interface panels and components, termination equipment, patch panels, backboards, converters, digital video matrix switchers, digital video extenders, controllers, digital signal processors, amplifiers, custom faceplates, mounting hardware, fasteners, racks, cabinets, and any other related items shall be furnished and installed complete under this section, such that the system shall perform all functions listed herein in compliance with all of the specified requirements.

1.02 QUALITY ASSURANCE

A. Design, manufacture, testing and method of installation of all apparatus and materials furnished under requirements of these specifications shall conform to latest publications or standard rules of the following:

1. AES - Audio Engineering Society
2. ANSI - American National Standards Institute
3. BICSI - Building Industry Consulting Service International, Inc.
4. CEDIA - Custom Electronic Design and Installation Association
5. Digital Display Working Group
6. EIA - Electronic Industries Alliance
7. FCC - Federal Communications Commission
8. HDMI Licensing, LLC
9. INFOCOMM - International Communications Industries Association
11. IEEE - Institute of Electrical and Electronic Engineers
12. ISO - International Organization for Standardization
13. ITU -Telecommunication Standardization Sect
14. MPEG - Moving Picture Experts Group
14. NAB - National Association of Broadcasters
15. NEC - National Electrical Code
16. NEMA - National Electrical Manufacturers Association
17. NFPA - National Fire Protection Association
18. NSCA - National Systems Contractors Association
19. CALOSHA - Occupational Safety and Health Administration
20. SMPTE - Society of Motion Picture and Television Engineers
21. TIA - Telecommunications Industry Association
22. UBC - Uniform Building Code

23. UL - Underwriters Laboratories Inc.
24. VESA - Video Electronics Standards Association
25. Local Authority Having Jurisdiction (AHJ) Published Electrical Standards and Codes

B. Perform Work in accordance with the National Electrical Code, applicable building ordinances, and other applicable codes, hereinafter referred to as the "Code." The Contractor shall comply with the Code including local amendments and interpretations without added cost to the OCFA. Where Contract Documents exceed minimum requirements, the Contract Documents take precedence. Where code conflicts occur, the most stringent shall apply unless variance is approved.
   1. Comply with all requirements for permits, licenses, fees and codes. The Contractor, at Contractor's expense, shall obtain all permits, licenses, fees, special service costs, inspections and arrangements required for Work under this contract, unless otherwise specified.
   2. Comply with requirements of the applicable utility companies serving this Project. Make all arrangements with utility companies for proper coordination of Work.

1.03 GENERAL REQUIREMENTS

A. Guarantee: Furnish a written guarantee for a period of (1) one-year from date of acceptance.

B. Wherever a discrepancy in quantity of equipment, cable, devices, etc., (all materials), arises on the Drawing and/or Specifications, the Contractor shall be responsible for providing and installing all material and services required by the strictest condition noted on Drawings and/or in Specifications to ensure complete and operable systems as required by the OCFA and Audiovisual Systems Design Consultant.

C. The contractor shall hold a valid State of California C-7 Low-Voltage license, shall have completed at least 10 projects of equal scope, shall have been in business of furnishing and installing systems of this scope and magnitude for at least five years, and capable of being bonded to assure the OCFA of performance and satisfactory service during the guarantee period.

D. The contractor shall hold all other licenses required by the legally constituted authorities having jurisdiction over the work.

E. All work shall be performed under the supervision of a company accredited by the basic equipment manufacturer and such accreditation must be presented.

F. The installing contractor shall be a factory authorized installer and warrantee station for the brand of equipment offered and shall maintain a fully equipped service organization capable of furnishing adequate repair service to the equipment.

G. All of the equipment in this specification shall be furnished and installed by the Authorized Factory Installer of the equipment. The Contractor shall furnish a letter from the manufacturer of all major equipment, which certifies that the installing contractor is the Authorized Installer and that the equipment has been installed according to factory intended practices. The Contractor shall also furnish a written guarantee from the manufacturer that they will have a service representative assigned to this area for the life of the equipment.

H. All Audiovisual systems equipment supplied shall be listed by Underwriters Laboratories. A copy of the UL listing card for the proposed system shall be included with the contractor's submittal.

I. Personnel: Use adequate numbers of skilled workers who are thoroughly trained and experienced with the specified requirements and the methods needed for proper performance of the AV systems installation work specified herein.
   1. Designated Project Engineer: Provide a designated Project Engineer in responsible charge of the Design, CAD, In-House testing and on the on-site commissioning of the Project during all phases of the work of this specification. This Project Engineer shall hold a current InfoComm CTS-D, and manufacturer certified, and shall be the same individual through the execution of the work unless illness, loss of personnel, or other circumstances reasonably beyond the control of the Contractor intervene.
   2. Technicians shall have at least three (3) years direct experience in similar work. The AV technicians assigned to this project shall be fully trained, qualified and carry valid and current industry

certifications regarding the, installation, operation and testing of Audiovisual Systems. At least one InfoComm CTS-I, and manufacturer certified, shall be assigned as Lead Technician to the project.

3. Custom Control System Programmer: Provide at least one (1) full time programmer on staff, capable of on-site custom programming of the custom remote control system specified herein. Control System Programmer to hold the following certifications: InfoComm CTS and manufacturer certified. A programming Sub-Contractor may be used as long as the Programmer has the certifications as listed above.
4. Designated Project Manager Single Point of Contact: Provide a designated Project Manager in responsible charge and Single Point of Contact on the Project Site during all phases of installation and testing of the work of this specification.
   The Project Manager shall:
   a. Hold current InfoComm CTS-I or CTS, and manufacturer certified.
   b. Initiate and coordinate tasks with OCFA's Project Manager.
   c. Provide day-to-day direction and on-site supervision of Contractor personnel.
   d. Ensure conformance with all Contract provisions.
   e. Participate in weekly site project meetings as needed.
   f. Be the same individual through the execution of the work unless illness, loss of personnel, or other circumstances reasonably beyond the control of the Contractor intervene.

J. All of the equipment in this specification shall be furnished and installed by the Authorized Factory Installer of the equipment with the most current software & firmware package available at the time of installation. At the time of OCFA Acceptance of the installation, all equipment shall include any and all updated software or hardware revisions. In addition, when the software is available in disk format, a backup copy of the most up to date revision, in disk format, shall be handed to the OCFA at the completion of the project.

K. Verifying Drawings and Job Conditions:
   1. This Contractor shall examine all Drawings and Specifications in a manner to be fully cognizant of all work required under this Section.
   2. This Contractor shall visit the site and verify existing conditions. Where existing conditions differ from Drawings, adjustment(s) shall be made and allowances included for all necessary equipment to complete all parts of the Drawings and Specifications.

1.04 WORK IN COOPERATION WITH OTHER TRADES

A. Examine the Drawings and Specifications and determine the work to be performed by the electrical, mechanical and other trades. Provide the type and amount of Audiovisual Systems materials and equipment necessary to place this work in proper operation, completely wired, tested and ready for use. This shall include all additional conduits, boxes and other devices for the required operation sequence of all Audiovisual Systems equipment.

1.05 SPECIFIC AUDIOVISUAL SYSTEM TESTING REQUIREMENTS

A. Furnish all equipment and personnel to conduct these tests in accordance with the performance specification requirements. ANSI and EIA Standards.

B. Contractor will review and assess the appropriate Lens Throw length between the video projectors and the projection screens to ensure optimum picture sizing and focus. Make all adjustments necessary, including projector keystone correction and lens shift to achieve the image size and shape required.

C. Provide full video projector calibration and adjustments for optimal picture quality for all used inputs. Provide proper aspect ratio configuration for 4:3, 16:9 and 16:10 sources. Set all projector configuration presets required for control system recall coordination, and provide with final system documentation.

D. Provide full flat panel monitor display calibration and adjustments for optimal picture quality for a single HDMI, DP or DVI-D input. Provide proper aspect ratio configuration for 4:3, 16:9 and 16:10 sources. Use a test generator (I.E. Extron, VTG Series or equal): for all setup verification, and verify proper image configuration with the all inputs. (Contract the OCFA's Technical Representative prior to final adjustment to coordinate).

E. Controls: Adjust all controls to achieve the specified performance. Provide shaft-locks or covers for all level controls, as appropriate to prevent unauthorized gain changes. Audiovisual Contractor will confirm that all control system operations are properly programmed and repeatable.

F Testing Report: Provide a letter/report documenting the results of these preliminary tests, including amplifier gain/level settings, DSP EQ filter settings, and AV equalization curves for review by the AV Design Consultant.

G. See wiring device section of this specification for wiring device plate cover labeling requirements.

H. See drawings for panel board schedule directory installation requirements.

I. See conduit installation section of this specification for conduit labeling requirements.

1.06 FINAL INSPECTION AND ACCEPTANCE

A. After all requirements of the Specifications and/or the Drawings have been fully completed, representatives of the OCFA will inspect the work. Contractor shall provide competent personnel to demonstrate the operation of any item or system to the full satisfaction of each representative.

B. Final acceptance of the work will be made by the OCFA after receipt of approval and recommendation of acceptance from each representative.

1.07 RECORD DRAWINGS

A. Drawings of Record: The Contractor shall provide and keep up-to-date, a complete record set of drawings. These shall be corrected daily and show every change from the original Drawings. This set of prints shall be kept on the job site and shall be used only as a record set. This shall not be construed as authorization for the Contractor to make changes in the layout without definite instruction in each case. Upon completion of the work, a set of reproducible Contract Drawings shall be obtained from the General Contractor and all changes as noted on the record set of prints shall be incorporated thereon with black ink in a neat, legible, understandable and professional manner. Refer to the Supplementary General Conditions for complete requirements.

1.08 APPROVALS, EQUALS, SUBSTITUTIONS, AND ALTERNATIVES

A. Approvals: Where the words (or similar terms) “approved”, “approval”, “acceptable”, and “acceptance” are used, it shall be understood that acceptance by the OCFA, Architect and Audiovisual Systems Design Consultant are required.

B. Equal: Where the words (or similar terms) “equal”, “approved equal”, “equal to”, “or equal by”, “or equal” and “equivalent” are used, it shall be understood that these words are followed by the expression “in the opinion of the OCFA and Audiovisual Systems Design Consultant.” For the purposes of specifying products, the above words shall indicate the same size, made of the same construction materials, manufactured with equivalent life expectancy, having the same aesthetic appearance/style (includes craftsmanship, physical attributes, color and finish), and the same performance.

C. Substitution: For the purposes of specifying products “substitution” shall refer to the submittal of a product not explicitly approved by the construction documents/specifications.
   1. Substitutions of specified equipment shall be submitted and received by OFCA and the Audiovisual Systems Design Consultant ten (10) days prior to the bid date for review and written approval. Regulatory Agency approval for all substitutions will be the sole responsibility of the Contractor. To receive consideration, requests for substitutions must be accompanied by documentary proof of its equality with the specified material. Documentary proof shall be in letterform and identify the specified values/materials alongside proposed equal values/materials. In addition, catalog brochures and samples, if requested, must be included in the submittal.
   2. In the event that written authorization is given for a substitution, after award of contract, the Contractor shall submit to OFCA and Audiovisual Systems Design Consultant quotations from suppliers/distributors of both the specified and proposed equal material for price comparison, as well as a verification of delivery dates that conform to the project schedule.
   3. In the event of cost reduction, the OCFA will be credited with 100 percent of the reduction, arranged by Change Order.
   4. The Contractor warrants that substitutions proposed for specified items will fully perform the functions required.

D. Alternates/Alternatives: For the purposes of specifying products, “alternatives/alternates” may be established to enable the OCFA/Architect/ Audiovisual Systems Design Consultant to compare costs where alternative materials or methods might be used. An alternate price shall be submitted in addition to the base bid for consideration. If the alternate is deemed acceptable, written authorization will be issued.

1.09 SHOP DRAWINGS/SUBMITTALS

A. Shop Drawings/Submittals shall be submitted in digital sets accompanied by Letter of Transmittal, which shall give a list of the number and dates of the drawings submitted. Drawings shall be complete in every respect and bound in sets.

B. The Shop Drawings/Submittals submitted shall be marked with the name of the project, numbered consecutively and bear the approval of the Contractor as evidence that the Contractor has checked the Drawings. Any Drawings submitted without this approval will be returned to the Contractor for resubmission.

C. If the shop drawings show variations from the requirements of the Contract because of standard shop practice or other reasons, the Contractor shall make specific mention of such variations in the Contractor’s letter of transmittal. If the substitution is accepted, the Contractor shall be responsible for proper adjustment that may be caused by the substitution. Samples shall be submitted when requested.

D. Only products listed as “Equal” within the contract documents, along with formally approved “Substitutions” will be reviewed. Products not conforming to these items will not be reviewed and will be returned to the Contractor for re-submittal.

E. Review comments used in response to shop drawings/submittals are:
1. “No Exception Taken” - Product approved as submitted.
2. “Furnish as Corrected” - Re-submittal not required, although the Contractor shall provide the submitted product with corrections as noted.
3. “Revise And Resubmit” - Re-submittal required with corrections as noted.
4. “Rejected” - Re-submittal required based upon the originally specified product.

F. Shop drawings shall be submitted on the following but not limited to:
1. AV system diagram.
2. Equipment Rack Elevation
3. Instructor Station.
4. Touch Panel Layouts and pages
5. All other products called out on drawings that call for shop drawing submittal.

PART 2 – SYSTEM EQUIPMENT SPECIFICATION

2.01 MATERIALS

A. Materials and Equipment: All AVS materials and equipment, including custom-made equipment, shall be new and shall be listed by Underwriter's Laboratories (UL) and bear their label or be listed and certified by a Nationally Recognized Testing Lab (NTRL) that is also recognized by the local Authority-Having-Jurisdiction (AHJ).

2.02 SYSTEM FUNCTIONS AND CAPABILITIES:

A. The AVS shall be utilized for presenting, viewing and listening to multimedia presentations. The system shall utilize/integrate where indicated, computer, microphone, and other inputs for output to DLP/LCD Projectors, LCD/LED Displays, and Sound Reinforcement Systems. The AV system shall be controlled by either a Touch Panel interface with control system processor. The control system shall be able to control the all functions of the AV equipment, Audio Volume, digital media switching, Projectors. The AVS shall be integrated into lighting control systems, where required on plans. See AV drawings for more detailed information regarding specific system functionality.

B. The AVS shall provide clear, natural sound uniformly distributed throughout the designated areas. The system shall utilize speakers as shown on the plans. These quantities shall be considered as the minimum quantity required. The AV system shall also be able to display High Definition Video to the Native Resolution of all displays without any distortion or artifacts.

C. The system shall have adequate dynamic range without audible clipping or distortion to accommodate all types of program material. Audio, Digital Signal Processing shall be employed in the designated rooms to insure smooth frequency response, high acoustical gain before feedback. When at maximum level, the system shall operate without audible distortion, rattles and buzzes. All switching shall be silent and without pops and or transients.

D. The system frequency response shall be within +/- 2dB from a curve which is flat from 80Hz to 4kHz and decreasing 3dB per octave from a relative level of 0 dB from 4kHz to 10kHZ. There shall be a minimum 12dB roll-off above 10 kHz and below 63 Hz. Uniformity of coverage of the system at seated ear height (42") shall be within +/- 3dB in the 4kHz 1/3 octave band at any seat location using pink noise as a test signal.

E. System noise shall not exceed an equivalent input noise of -120dB based on a 20KHz-noise bandwidth. The predominant noise component in the system output under any operating condition shall be that of the input stage.

F. The sound level capability of program material levels produced in all seats shall be at least 75dB when measured with a scaled filter. There shall be at least 6dB of amplifier headroom.

G. The system shall provide clear audio to all areas covered by the system. Each side, Left & Right shall be wired discretely to the correct channel on the amplifier. See AVS drawings for exact location.

H. EDID and Color Space Management. EDID data exchange is a standardized means for a display to communicate its capabilities to a source device. It is the AV contractor's responsibility to address and resolve and manage all EDID and Color Space issues.

I. HDCP (High-bandwidth Digital Content) is an encryption protocol for copy protected video content as Blu-Ray Disc, HD movie downloads, Cable TV & Satellite TV. It is the Contractor's responsibility for proper HDCP and Digital Rights Management (DRM) in all systems listed in plans and this specification.

J. CEC (Consumer Electronics Control) is device control functions between all connected HDMI devices. It is the AV contractor's responsibility for proper CEC Management in all systems listed in plans and this specification.

2.03 SOFTWARE PROGRAMMING

A. General: Except when otherwise agreed in writing the OCFA shall retain legal and beneficial ownership of all Intellectual Property, including source code, created by the Contractor, their employees and sub-contractors.

B. The Contractor must allow sufficient time for the programming of all software configurable audio, video and control systems. Contractors must evaluate the systems functional requirements and user interface and then allow time in their bid accordingly. The system description as well as the end user interview will provide the Contractor with the necessary information needed to proceed with the programming. Any questions as to the systems functional requirements must be sent in written RFI form to the Consultant. All programming schemes must be submitted to the Consultant for approval before programming starts. This includes the appearance of all user interfaces, touch panel layouts, preset and sub-preset information (acquired through OCFA interviews), and speaker control schemes. The Contractor will also submit a narrative for the control system concept to the Consultant for approval. The Contractor is to interview the OCFA and their representatives to acquire the necessary information needed to allow for the proper programming of this system. The Contractor, after interviewing the OCFA, will then submit a written report stating his interpretation of the OCFA's requirements for approval by Consultant. Only after the OCFA and Consultant have approved the programming report may the Contractor proceed with the programming of this system.

C. All equipment that is connected to OCFA's local area network and is configurable via the local area network must have its equipment software installed onto dedicated computers provided by OCFA. The Contractor is to allot time to install and test equipment software onto a minimum of two of OCFA's computers which are to be identified by OCFA and/or Consultant. The computers will be programmed to emulate user interfaces throughout the facility. The Contractor shall coordinate all software deployment over IP with OCFA's Information technology department.

D. A user-friendly/easy to use graphical interface programmed by the Contractor will allow for easy operation of the system. This interface shall allow novice users the control of main system components without having to access the digital schematic diagram. These main system components will include master volume control, zone volume control, room combining, routing, switching, source-equipment level control and any other control necessary for the system to function properly from a user standpoint.

E. Control system minimum programming outlined below:
1. The Contractor shall allot as many hours as required for on-site control system programming with OCFA's representative.
2. The Control System in this project shall connect to OCFA's Local Area Network (LAN). This connection will provide desktop computers control of the audio-visual system as well as make available remote troubleshooting via the internet and manufacturer software. The Contractor shall provide time to install control system interface software on at least three desktop computers. Coordinate work with OFCA's Information Services personnel.
3. Provide password protection to each control surface in this facility.
4. Touch panels shall be activated and deactivated by password. Upon start up a password dialog box shall be presented to the user to enter his/her password. Only after entering a password will the user have access to the system. The system shall be programmed to shut down automatically after being idle for a time to be specified by the user.
5. Touch panel layout design will conform to the InfoComm International "Dashboard for Controls" and manufacturer's programming guidelines. Touch panel designs are to be custom to this project. Re-purposed touch panel designs are not acceptable.
6. Control Help File: Each touch panel will include a help file that will explain each layer of the touch-panel control scheme.
7. Control system shall utilize help desk software to provide:
   a. Real-time monitoring of: Control system, Device monitoring, Projector lamp life, System online status, Room activity, Remote system diagnostics via Contractors help desk, Remote system control, Fault reporting via email alert, logging of help request, User access control via password protection, Event logging, report and chart generation.
8. All serial controlled devices must have bi-directional communication with the control system. All control functions locally available on each device must be accessible via the remote control system. All locally gestured control functions must mirror on the control system user interface. In other words, if a volume control is adjusted on a DSP interface that adjustment must register on the control interface.
9. Control system shall be used to power up and down connected equipment.
10. All projectors shall be monitored and report lamp hours remaining and lamp failure.

F. Complexity of Programming:
1. It is required that the Contractor be experienced in manufacturer's programming and programming systems of this complexity. Contractors shall allow enough time in their bid to permit extensive programming of all software configurable audio, video and control systems to the requirements of OCFA and consultant. Contractor shall break out cost associated with programming of these systems for review by the Consultant. By submitting this bid, the Contractor agrees that they understand systems of this type and that all programming services are included to the satisfaction of the Consultant. The Contractor further agrees that they will not make any claim for additional monies because of misinterpretation of programming requirements.

2.04 AUDIO VISUAL SCOPE OF WORK

A. This project is an upgrade in technology to the existing functioning AV systems in the rooms listed below. Some of the existing infrastructure shall be re-used after testing and verifying the functionality, a document with test results shall be provided for review by the OCFA and Consultant before the existing system is de-commissioned. Some of the existing analog cables shall be removed by the AV contractor before installing new cabling. The existing equipment except where noted shall be removed from the system and provided to the OCFA for their re-use, inventory, or disposal.

1. Boardroom
   a. The AV presentation system shall have the existing Draper screens receive a new replacement screen fabric on a roller with a 16:10 aspect ratio installed behind the Dais; and a new complete replacement screen with white metal case and 16:10 aspect ratio, located behind the audience seating. This screen shall require an additional 30" of black drop. The existing screen control cables shall be re-used and must be tested and verified by Contractor. There shall be two (2)

new 3-LCD panel, 6,500 ANSI lumen, 1920 x 1200 resolution, and projectors. The new projectors shall be installed at the same location as the existing projectors, above the center ceiling disc. Refer to AV drawings for more information. The displays in the rooms shall have a scaling receiver set to the correct resolution for each display/projector where indicated on the AV single line drawings. The analog video cables feeding the projectors shall be removed by the AV contractor and replaced with new digital shielded twisted pair cables with shielded connectors.

b. The Dais display monitors will be replaced with fifteen (15) new 20" LED displays with height adjustable stands, 1920 x 1080 resolution (16:9 aspect ratio). New scaler receivers feeding the HDMI 1 x 6 distribution amplifiers located at the Dais to be set to the appropriate output resolution will drive the displays. These will be replacing the existing monitors. Contractor will remove the existing analog video cables before installing the new digital shielded, twisted pair cables with shielded connectors. The base of the new displays shall set down into the existing openings in the Dais top, no cutting of the Dais top shall be required.

c. There will be two 65" professional LED displays wall mounted behind the Dais at either end on the small walls, see tea v drawing for actual locations and mounting height.

d. The existing analog computer and video inputs in the floor boxes (in front of the staff tables, under the Dais) and wall plates shall be replaced with new digital transmitters for connection to the new digital video matrix. The cables at the locations shall be removed by the AV contactor.

e. The audio system shall be updated with new digital signal processor (DSP) mixers with Audio Video Bridge (AVB) connections and a stand-alone AVB network and AVB switch for connections between mixers. The delegate microphone and voting system using, data cabling with RJ-45 connectors, provided by the manufacture, to interconnect each microphone station on the Dais and staff tables. The main cables to the Dais and staff tables will need to be bulk cable pulled and terminated per the manufactures termination instructions in the system manual.

f. There shall be two (2) digital audio recording devices.

g. The existing analog microphone inputs in the floor boxes and cabling shall be re-used as a back-up microphone system, these floor box input plates and cable shall be tested, verified and documented for proper operational parameters.

h. There shall be two (2) new "Press Feed" XLR-F output plates located at the existing wall boxes with the wall plates with BNC connector located on the walls at the ends of the Dais on the audience side of the wall. The new "Press Feed" plates shall use the existing cable path back to the AV racks.

i. The existing speaker system, shall be used for sound re-enforcement in the room. The speaker system will consist of existing wall mounted Renkus-Heinz loudspeaker over the Dais aimed at the audience seating and recessed Tannoy ceiling speakers along with existing QSC Audio amplifiers. The amplifiers shall be removed and sent to the manufacture (QSC Audio, Costa Mesa) for cleaning, inspection and refurbishing and then replaced in equipment rack. The entire speaker system, including amplifiers, and speakers shall be fully tested and verified to manufacturers specifications. The existing speaker cables shall be replaced with new 16/2 plenum speaker cable.

j. The system shall be set up for audio conferencing using the existing analog telephone connections. The conferencing system shall have a VoIP connection provided for the future upgrade. The telephone system VoIP connection shall not be made on Day 1.

k. There shall be two (2) new digital wireless microphone systems provided. Existing wireless microphone system, located in AV tech booth, shall be removed. The wireless microphone antennas shall be remote mounted above the drop tile ceiling behind the Dais see AV drawings for the location.

l. The podium shall have a new analog goose neck microphone. There are existing cabling for the podium microphone that will need to be fully tested, verified and documented.

m. There shall be a remote “Mute” button on the Dais at the Chairman’s position to allow the Chairman to mute the microphone during a meeting. The wiring of the Mute button the DSP Logic port shall require custom wiring, the wiring requirement shall be provided. The cable for the Mute button at the Chairman’s seat may be able to pass through the existing monitor opening in the Dais top so no additional hole will be required in the Dais top.

n. The existing Assistive Listening System (ALS), Sennheiser mfg. shall be re-used. There is a replacement infrared (IR) emitter that shall replace a missing unit at the left side of the Dais as you face the Dais. New neck loop (inductive loop) receivers will be added to update the inventory of existing receivers.

o. There shall be a new delegate microphone system with microphone stations at each seat on the Dais and staff tables. These microphone stations shall have a built-in speaker and headphone jack with volume level control for people with a hearing impairment. There shall be lightweight headphones provided for those individuals who have a hearing impairment and wish to control the volume level heard through the headphones.

p. There shall be a new electronic voting system provided with hand held voting devices at each seat on the Dais. There shall be two custom wall display panels that shall display up to fifteen (15) board member’s names and their voting results once tabulated by the clerk. The displays panels shall be located on the left side wall as you face the Dais. The panels shall be mounted at a height to provide an un-obstructed view over the board members heads from the Dais and for the audience seating.

q. The existing P/T/Z camera mounted to the wall outside of the AV booth shall be replaced by four (4) new pan, tilt, zoom (P/T/Z) cameras, two (2) cameras shall be ceiling mounted behind the Dais and two (2) shall be mounted to the wall outside of the AV booth. One camera will be for replacing the existing rear wall mounted cameras. A second camera shall require an in-wall box and conduit path into the AV booth, this shall be provided by the OCFA. The switched camera signal shall be sent to the video matrix system for routing to all of the displays and projectors. Control of the camera system shall be from the AV control booth.

r. The existing control system shall be removed and replaced by the AV Contractor with a new updated control system. The control system shall communicate through a dedicated network switch to devices with LAN ports and direct to devices with RS232, IR, and relay connections. The control system shall control all system functionality – On/Off, display On/Off, screen Up/Down, volume Up/Down/Mute program and microphones, Delegate system volume level, source input selection, camera video signal routing, and lighting preset selection, from any of the control panels. The control system shall be able to mute (go to black) the video images on the projectors and Dais displays separately. There shall be a “Podium Microphone Mute” button at the Chairman’s position on the Dais to “Mute” the podium microphone when required by the Chairman; this will be wired directly to the DSP Mixer Logic input, the status shall be reflected on the main control panels and can be overridden when required.

s. There shall be a 10” touch panel in a rack on a shelf, 10” table top touch panel for the clerk’s position on the staff table, and a 12” table top touch panel in the AV Booth.

t. The existing two (2) full height AV equipment racks shall be re-used for the new AV system. The racks are located in the storage room behind the Dais. The existing power distribution system shall be inspected for load capabilities. The existing power conditioners/strips shall be replaced.

u. There shall be two dedicated OFCI PCs in the AV racks, one shall be connected to the delegate microphone/voting system and the second shall be used for video conferencing using a Skype type software and the use of a USB bridging interface.

v. There shall be an H.264 streaming media processor provided and connected to the OCFA’s network and new video system for recording and streaming of meetings as required.

w. The Boardroom’s Lutron lighting control system shall be used to control the lighting scenes in the boardroom with an RS232 control connection.

x. The center ceiling disc in the Boardroom shall require acoustic treatment to the underside of the disc to reduce the echo in the middle of the room. The AV contractor shall be responsible for the ordering and installation of the acoustic treatment. The acoustic treatment shall have a finish (color) that shall match or blend with the existing ceiling color; the AV contractor and OCFA shall review the material finish options before ordering.

2. AV Control Room
   a. The existing wireless microphone systems shall be replaced by the new digital microphone systems in the main equipment racks.

   b. The existing video playback equipment shall be removed and replaced with a Blu-Ray disk player (RS232 controlled).

   c. The analog XLR audio inputs in the AV control booth shall be re-used for connectivity to the audio system, these connections shall be tested and verified.

   d. A new Camera Control Unit (CCU) for the new cameras shall have a 22" LCD touch display with connections for HDMI and RS232 control shall be located in the booth. There shall be a desk stand with three (3) display mounts. There shall be two 20" displays, one for monitoring and controlling the delegate microphone system, the second for monitoring the video programming and serve as a preview monitor, the third monitor shall be the 22" camera system monitor. There shall be a local three (3) input AV switcher with one (1) VGA/stereo audio and two (2) HDMI inputs for that shall be connected to the digital video switching system.

   e. The ALS receivers shall be stored and charged in the booth.

   f. Two (2) wireless keyboards/touch pad with 50' minimum range and operates in the RF frequency range shall be connected to the computers in the AV racks.

   g. There shall be a rack mounted 1RU speaker provided to allow monitoring of the audio in the Boardroom, this input shall be able to be selected from the control panel.

3. Classroom/Break-out Room AE-117
   a. This room shall server as an "Overflow" room for the Boardroom and as a Training classroom.

   b. The existing projector shall be removed and replaced with a new projector with 3 LCD panels, 5000 ANSI lumen, (1920 x 1200 resolution) and 16:10 aspect ratio. The existing manual 80" wide screen shall be used in this room for the projection surface, the image shall fill the screen image area left to right, a white area is acceptable, it would be preferred for the white area be at the bottom of the image. The AV contractor is responsible for confirming the throw distance for the new projector and lens and relocating the projector mount if required. There shall be a HDMI twisted pair receiver at the projector set the solution for the projector.

   c. There are two floor boxes, one with microphone inputs in one that shall be tested and verified. The second floor box has an analog computer input plate that shall be removed and replaced by a digital input plate with HDMI and VGA/stereo audio connections with a digital connection to the AV switcher. There are two wall plates to the left of the screen with the same inputs as the floor boxes that will be connected to the AV system.

   d. The existing analog video cables shall be removed by the AV contractor before installing the digital shielded twisted pair cable and shielded connectors.

   e. The existing speaker system includes recessed Tannoy ceiling speakers and a QSC Audio amplifier. The amplifier shall be removed and sent to the manufacture (QSC Audio, Costa Mesa) for cleaning, inspection and refurbishing and then replaced in equipment rack.

   f. The entire speaker system including amplifiers, and speakers shall be tested and verified. The existing speaker cables shall be replaced with new 16/2 plenum speaker cable.

   g. There shall be a new DSP mixer for the microphone inputs and program audio inputs.

   h. There shall be two new digital wireless microphone systems installed.

i. The existing video switching system shall be replaced with a digital scaling video matrix switcher with shielded twisted pair inputs and outputs with shielded connectors in addition to HDMI inputs.

j. The existing ALS system shall be re-used. It is the AV contractor's responsibility to test and verify the functionality of the system. New neck loop (inductive loop) receivers will be added to update the inventory of existing receivers.

k. The existing control system shall be removed and replaced. The new system shall communicate through a dedicated network switch to devices with LAN ports and direct RS232, IR, and Relay connections for equipment.

l. There shall be a 12" table top touch panel located on the podium.

m. The control system shall control all system functionality – On/Off, display On/Off, screen Up/Down, volume Up/Down/Mute program and microphones, and "Mute" the projector image.

n. The existing full height rack located in the storage room at the back of the room shall be re-used.

o. The existing power distribution system in the rack shall be inspected, the power conditioners/strips shall be replaced.

p. There shall be a new wall mounted P/T/Z camera at the back of the room. There is an existing in-wall box to be used for cabling. The camera shall be controlled from the touch panel.

q. There shall be a direct HDMI input from the boardroom system using shielded twisted pair cable and HDMI receiver.

r. There shall be a H.264 streaming media processor provided and connected to the video system and OCFA's network for recording and streaming meetings when required.

s. There are no lighting control requirements in this room.

4. Classrooms 153 & 154

a. Each classroom shall have identical AV systems as follows, and the systems shall be interconnected for use when combined.

b. The existing projector shall be removed and replaced with a new projector with 3 LCD panels, 5000 ANSI lumen, (1920 x 1200 resolution) and 16:10 aspect ratio. The existing manual 80" wide screen shall be used in this room for the projection surface, the image shall fill the screen image area left to right, a white area is acceptable, it would be preferred for the white area be at the bottom of the image. The AV contractor is responsible for confirming the throw distance for the new projector and lens and relocating the projector mount if required. There shall be a HDMI twisted pair receiver at the projector set the solution for the projector.

c. There is an existing LED/LCD display that shall be connected to the AV system as a second display device.

d. There are three floor boxes with microphone inputs in room 153 and one in 154 that shall be tested and verified.

e. The second floor box has an analog computer input plate that shall be removed and replaced by a digital input plate with HDMI and VGA/stereo audio connections with a digital connection via shielded twisted pair cable with shielded connectors to the AV switcher. The existing analog video cables shall be removed by the AV contractor before installing the digital shielded twisted pair cable. Classroom 154 shall have one (1) floor box with for AV input plate, classrooms 153 shall have three (3) floor boxes with AV input plates.

f. The existing speaker system including the recessed Tannoy ceiling speakers.

g. The existing QSC Audio amplifier shall be removed and sent to the manufacture for cleaning and inspection to confirm it is in optimum operating condition.

h. The speaker system including amplifiers, and speakers shall be tested and verified. The existing speaker cables shall be replaced with new 16/2 plenum speaker cable.

i. There shall be a new digital DSP mixer with expansion module for the microphone inputs and program audio inputs, there shall be two new digital wireless microphone systems installed.

j. The existing video switching system shall be replaced with a digital scaling video matrix switcher with shielded twisted pair inputs/outputs and HDMI inputs.

k. The existing ALS system shall be re-used. It is the AV contractor's responsibility to test and verify the functionality of the system. New neck loop (inductive loop) receivers will be added to update the inventory of existing receivers.

l. The existing control system shall be removed and replaced by the AV contractor with a new system that shall communicate through a dedicated network switch to devices with LAN ports and direct RS232, IR, and relay connections for equipment without LAN connections.

m. There shall be a 12" table top touch panel located on the podium. The control system shall control all system functionality – On/Off, display On/Off, screen Up/Down, volume Up/Down/Mute program and microphones, "Mute" the projectors image, input selection, camera and video signal routing.

n. The existing half height rack located in the millwork behind the podium location shall be re-used.

o. The existing power distribution system in the rack shall be inspected, the power conditioners/strips shall be replaced.

p. There shall be a new ceiling mounted P/T/Z camera in the middle of the room. The camera shall be controlled from the touch panel.

q. There shall be a H.264 streaming decoder, network connected, for receiving streamed signal from the Boardroom AV system.

r. There shall be a H.264 streaming media processor provided and connected to the OCFA's network and digital video switching system for recording and streaming meetings when required.

s. There are no lighting control requirements in this room.

5. Training Rooms D106 & D107

a. Each classroom shall have identical AV systems as follows, and the systems shall be interconnected for use when combined.

b. The existing projector shall be removed and replaced with a new projector with 3 LCD panels, 5000 ANSI lumen, (1920 x 1200 resolution) and 16:10 aspect ratio. The existing manual 80" wide screen shall be used in this room for the projection surface, the image shall fill the screen image area left to right, a white area is acceptable, it would be preferred for the white area be at the bottom of the image. The AV contractor is responsible for confirming the throw distance for the new projector and lens and relocating the projector mount if required. There shall be a HDMI twisted pair receiver at the projector set the solution for the projector.

c. There is an existing LED/LCD display that shall be connected to the AV system as a second display device.

d. There are two floor boxes, one with microphone inputs in one that shall be tested and verified.

e. The second floor box has an analog computer input plate that shall be removed and replaced by a digital input plate with HDMI and VGA/stereo audio connections with a digital connection via shielded twisted pair cable with shielded connectors to the AV switcher. The existing analog

video cables shall be removed by the AV contractor before installing the digital shielded twisted pair cable. Classroom 154 shall have one (1) set of floor box inputs for microphone and AV input plate, classrooms 153 shall have three (3).

f. The existing speaker system including the recessed Tannoy ceiling speakers.

g. The existing QSC Audio amplifier shall be removed and sent to the manufacture for cleaning and inspection to confirm it is in optimum operating condition.

h. The speaker system including amplifiers, and speakers shall be tested and verified. The existing speaker cables shall be replaced with new 16/2 plenum speaker cable.

i. There shall be a new digital DSP mixer with expansion module for the microphone inputs and program audio inputs, there shall be two new digital wireless microphone systems installed.

j. The existing video switching system shall be replaced with a digital scaling video matrix switcher with shielded twisted pair inputs/outputs and HDMI inputs.

k. There shall be a new ALS system. New receivers with headsets and neck loop (inductive loop) receivers will be required for these rooms.

l. The existing control system shall be removed and replaced by the AV contractor with a new system that shall communicate through a dedicated network switch to devices with LAN ports and direct RS232, IR, and relay connections for equipment without LAN connections.

m. There shall be a 12" table top touch panel located on the podium. The control system shall control all system functionality – On/Off, display On/Off, screen Up/Down, volume Up/Down/Mute program and microphones, "Mute" the projectors image, input selection, camera and video signal routing.

n. The existing half height rack located in the millwork behind the podium location shall be re-used.

o. The existing power distribution system in the rack shall be inspected, the power conditioners/strips shall be replaced.

p. There shall be a new ceiling mounted P/T/Z camera in the middle of the room. The camera shall be controlled from the touch panel.

q. There shall be a H.264 streaming decoder, network connected, for receiving streamed signal from the Boardroom AV system.

r. There shall be a H.264 streaming media processor provided and connected to the OCFA's network and digital video switching system for recording and streaming meetings when required.

s. There are no lighting control requirements in this room.

2.05 AUDIO/VISUAL SYSTEM PRODUCTS

The system shall utilize Audiovisual System products as shown on the Plans and listed below. These products shall be considered to be the minimum quantity, performance, functionality and quality levels. If additional and/or upgraded components are needed to meet the performance requirements of this specification, the Contractor shall include all costs for such added and/or upgraded components in the base bid. Part numbers and brands provided are for reference only and do not limit the bidders from submitting alternatives for review and evaluation.

A. Boardroom

1. Digital Video Equipment

a. PROJ1-1 & PROJ1-2

Filter: Long lasting eco filter (up to 15,000 hours)

Brightness: 6,001 to 8,000 lm

Diagonal Screen Size: 1.02-10.16 m (40-400 in),1.52-10.16 m (60-400 in) with the ET-ELW22, 16:10 aspect ratio

Technology: LCD, highly durable optical engine with inorganic LCD panels and polarizers providing up to 10,000 hours of maintenance free service.

Resolution: WUXGA, 1920 x 1200

Lens: Standard or as needed

Provide:

2-Each, Panasonic PT-EZ770ZU, 6500 ANSI Lumen, 3 LCD, 1920 x 1200 Resolution, 16:10, w/digital link. – Or Equal

2-Each, Panasonic ET-LAE300, lamps. – Or Equal

2-Each, Panasonic ET-REF300, Filters. – Or Equal

b. Mounts

Provide:

2-Each, Chief Mfg. RPMA302, projector mount. – Or Equal

c. SCN1-1

Provide:

1-Each, Draper Access/V Screen (No Case), 136-3/4" Diagonal Custom 16:10 *Xt1000vb, Matt White Black Backed, Viewing Area: 72-1/2 height X 116 width, Total Top Drop = 4" Black, **Required Minimum Steel Case Construction, Case Length = 143", 115 VAC Motor *Hook up Left, (Dias Side) Large Projection Screen, motorized. – Or Equal

d. SCN2-1

Provide:

1-Each, Draper Premier Electric Screen 94-1/4" Diagonal Custom, 16:10, *Xt1000vb, Matt White, Black Backed Viewing Area: 50 height X 80 width, Total Top Drop = 30" Black, *Small White Case 97-7/8" Overall Length, 115 VAC Motor, *Hook up Left, (Audience Side). – Or Equal

e. LVC1-1

Provide:

1-Each, Draper, Low Voltage Motor Controller, included in screen part number for the Premier screen – Or Equal

f. DISP1-1-DISP1-17

LED Display

Color: Black

Diagonal Viewing Size: 19.5 inch

Aspect Ratio: Widescreen (16:10)

Panel Type, Surface In-Plane Switching

Optimal Resolution: 1440 x 900 @ 60Hz

Contrast Ratio: 1000:1 (typical)

Brightness: 250 cd/m² (typical)

Response Time: 8 ms typical. 6 ms fast mode. GTG

Viewing Angle: 178° vertical / 178° horizontal

Color Support: 16.7 million colors

Pixel Pitch: 0.2915 mm x 0.2915 mm

Backlight Technology: LED

Stand: Flat Panel Mount Interface, VESA (100 mm)

Connectivity: DP 1.2, VGA, 2 x USB2

Adjustability: Tilt, Swivel, Pivot, Height Adjust

Provide:

17-Each, Dell P2016, 20" LED monitor with adjustable height stand, 16:10, 1280 x 800, LED Display. (15 displays for Dias, 2 displays for AV Tech Room) – Or Equal

1-Each, Single Arm Desk Mount, Chief Mfg. KCS320B , Triple Monitor (for AV Tech Room) – Or Equal

g. DISP2-1 and DISP2-1

Screen Size: 65"

Panel Technology: 60Hz D-LED BLU

Resolution: 1920x1080

Aspect Ratio: 16:9

Brightness: 450 nit

Contrast Ratio (Typical): 5000:1

Viewing Angle (H/V): 178:178

Response Time: 6ms

Connectivity

Input: VGA (D-Sub 15 Pin), DVI-D(HDMI Common), Display Port 1.2, HDMI1 Component/Composite, Stereo mini Jack, USB 2.0 x 1

Output: DP1.2 (Loop-out), Stereo mini Jack

External Control: RS232C (In/Out) thru Stereo Jack, RJ47

Sensor: IR, Ambient Light

Provide:

2-Each, Samsung DM65E, 65” LED display, Landscape Mounted. – Or Equal

2-Each, display thin wall mount, Chief, RLF2. – Or Equal

h. DISP3-1

LCD Panel: 22” TFT Color LCD

Resolutions: 1080/60p & 1080/50p

Touch Screen Type: 5-Wire Resistive Touch

Control Interface: RS-232 (DB-9F)

Video Format: Input DVI-D

Aspect Ratio: 16:10

Brightness: 300 nit (cd/m2)

Contrast Ratio: 1000:1

Pixel Pitch: 0.282mm

Viewing Angle: 170° (H) x 160° (V)

Provide:

1-Each, Vaddio Teletouch 22”, 999-5520-022, 22" LCD touch display, (used with Camera Production VIEW HD MV.) – Or Equal

i. XTPSWT1-1

50 Gbps digital backplane supports an 8K future

RS‑232 insertion from the Ethernet control port

Supported HDMI specification features include data rates up to 18 Gbps, Deep Color up to 12‑bit, 3D, and HD lossless audio formats

HDCP compliant

SpeedSwitch® Technology provides exceptional switching speed for HDCP-encrypted content

EDID Minder® automatically manages EDID communication between connected devices

Key Minder® continuously verifies HDCP compliance for quick, reliable switching

Automatic color bit depth management

Audio breakaway

Automatic output reclocking

Internal color bars test pattern with or without audio for setup and calibration

Provide:

1-Each, Extron, XTP 32 x 32, Series-2, Matrix switcher, Custom (Extron Master Quote CA#6564984) with input and output cards. – Or Equal

j. XTPTX1-1 to XTPTX1-5

Transmits HDMI or analog video, audio, and bidirectional RS-232 and IR up to 330 feet (100 m) over a shielded CATx

HDMI and VGA and Audio inputs

Supports computer and video resolutions up to 1920x1200, including 1080p/60 Deep Color and 2K — Supports digital signal transmission up to 330 feet over a single twisted pair cable.

Extron XTP DTP 24 shielded twisted pair cable is strongly recommended for optimal performance

Auto-switching between inputs.

Digital conversion of analog input signals.

Supported HDMI specification features include data rates up to 6.75 Gbps, Deep Color up to 12-bit, 3D, and HD lossless audio formats

HDCP compliant

User-selectable HDCP authorization

EDID Minder

Key Minder

HDCP Visual Confirmation

Front panel USB configuration port

Mounts in an included two-gang Decora-style wall plate

Provide:

5-Each, Extron XTP T UWP 202, 60-1216-13, Two Input XTP Transmitter, Decora, Wall plate, White. – Or Equal

k. XTPTX2-1 & XTPTX2-2

Transmits HDMI and bidirectional RS-232 and IR up to 330 feet (100 m) over a shielded CATx

HDMI input

Supports computer and video resolutions up to 1920x1200, including 1080p/60 Deep Color and 2K — Supports digital signal transmission up to 330 feet over a single twisted pair cable.

Extron XTP DTP 24 shielded twisted pair cable is strongly recommended for optimal performance

Supported HDMI specification features include data rates up to 6.75 Gbps, Deep Color up to 12-bit, 3D, and HD lossless audio formats

HDCP compliant

User-selectable HDCP authorization

EDID Minder

Key Minder

HDCP Visual Confirmation

Front panel USB configuration port

Mounts in an included one-gang Decora-style wall plate

Provide:

2-Each, Extron XTP T HWP 101, 60-1407-13, HDMI Decora Transmitter – White – Or Equal

l. XTPTX3-1

Transmits HDMI or analog video, audio, and bidirectional RS-232 and IR up to 330 feet (100 m) over a shielded CATx

HDMI and VGA and Audio inputs

Supports computer and video resolutions up to 1920x1200, including 1080p/60 Deep Color and 2K — Supports digital signal transmission up to 330 feet over a single twisted pair cable.

Extron XTP DTP 24 shielded twisted pair cable is strongly recommended for optimal performance

Auto-switching between inputs.

Digital conversion of analog input signals.

Supported HDMI specification features include data rates up to 6.75 Gbps, Deep Color up to 12-bit, 3D, and HD lossless audio formats

HDCP compliant

User-selectable HDCP authorization

EDID Minder

Key Minder

HDCP Visual Confirmation

Provide:

1-Each, Extron XTP T USW 103, 60-1198-01, Three Input XTP Switcher with Integrated XTP Transmitter. – Or Equal

m. XTPTX4-1 & XTPTX4-2

Transmits HDMI and bidirectional RS-232 and IR up to 330 feet (100 m) over a shielded CATx

Supports computer and video resolutions up to 1920x1200, including 1080p/60 Deep Color and 2K — Supports digital signal transmission up to 330 feet over a single twisted pair cable.

Extron XTP DTP 24 shielded twisted pair cable is strongly recommended for optimal performance

Auto-switching between inputs.

Digital conversion of analog input signals.

Supported HDMI specification features include data rates up to 6.75 Gbps, Deep Color up to 12-bit, 3D, and HD lossless audio formats

HDCP compliant

User-selectable HDCP authorization

EDID Minder

Key Minder

HDCP Visual Confirmation

Provide:

2-Each, Extron XTP T HDMI, 60-1043-12, HDMI XTP Transmitter. – Or Equal

n. XTPRX1-1 to XTPRX1-8

Receives video with embedded audio, bidirectional RS-232 and IR, and Ethernet up to 330 feet (100 m) over a shielded CATx cable — The XTP SR HDMI provides high reliability and maximum performance on an economical and easily installed cable infrastructure.

Scales HDMI, DVI, RGB, HD component video, and standard definition video received from XTP devices

Selectable output rates from 640x480 to 1920x1200, including 1080p/60 and 2K — The output rate can be selected using the on-screen menu system or via RS‑232 control.

Supported HDMI specification features include data rates up to 6.75 Gbps, Deep Color up to 12-bit, 3D, and HD lossless audio formats

HDCP compliant

User-selectable HDCP authorization

EDID Minder

Key Minder

Provide:

8-Each, Extron XTP SR HDMI, 60-1199-01, XTP Scaling Receiver. – Or Equal

o. SMP1-1

Process two high resolution AV signals from up to five available inputs

Stream and record simultaneously

High quality scaling with flexible two-window management

Produces MP4 media files that are compatible with virtually any media player

Available with 400 Gigabytes of internal solid state storage to allow more time between content transfers

Save recordings to internal solid state drive, external USB storage, or a defined network storage directory

Stream concurrently at two resolutions and bit rates

Stream at resolutions from 512x288 to 1080p/30

Internal Solid State Storage

HDCP-compliant input and output signal management

HDMI-embedded stereo audio or analog stereo input and output signal support

Audio mixing and DSP functionality

RS‑232, Ethernet, and digital I/O control ports

Supports source resolutions up to 1920x1200, including HDTV 1080p/60

Standards-based H.264 / MPEG‑4 AVC video compression

Provide:

1-Each, Extron SMP 351, 60-1324-01, H.264 Streaming Media Processor, Standard Version – 80 GB SSD. – Or Equal

p. HDMIDA1-1 to HDMIDA1-3

EDID Minder® automatically manages EDID communication between connected devices

Key Minder® continuously verifies HDCP compliance

HDCP compliant

Supports computer video up to 1920x1200, including HDTV 1080p/60 and 2K

Supported HDMI specification features include data rates up to 6.75 Gbps, Deep Color up to 12-bit, 3D, Lip Sync, and HD lossless audio formats

Automatic input cable equalization to 50 feet at 1080p/60 with 8-bit color

Automatic color bit depth management

HDMI to DVI Interface Format Correction

Output muting via RS-232

EDID status, HDCP authentication, and signal presence LED indicators

Provide:

3-Each, Extron HDMI DA6, 60-999-01, Six Output HDMI Distribution Amplifier. – Or Equal

q. BD1-1

Digital media player (Blu-ray Disc, DVD, CD, USB device [mass storage class]) AVCHD playback format

Supported Disc Formats: Blu-ray Disc: BD25, BD50, BD-ROM, BD-R, BD-RE

DVD: DVD, DVD+R, DVD-R, DVD+RW, DVD-RW

CD: CD, CD-R, CD-RW, DTS Music Disc (DTS Audio CD, 5.1 Music Disc), HDCD, Super Video CD (SVCD), Video CD (VCD)

Video Resolutions: Auto, 480i/576i, 480p/576p, 720p, 1080i, 1080p

Aspect Ratios: 16:9 Full, 16:9 Normal, 4:3 Pan & Scan, 4:3 Letterbox

System NTSC, PAL, Multi (if supported by TV)

HDMI Color Space: RGB PC Level, RGB Video Level, YCbCr (4:4:4), YCbCr 4:2:2

Output: HDMI > v1.4 (3D), HDCP 1.4

Decoding: Video: DivX 3, 4, 5, 6; DivX HD; MPEG-1; MPEG-2; MPEG-4; MPEG-4 AVC (H.264); VC-1 (Windows Media Video); Xvid

Audio: AAC; Dolby Digital; Dolby Digital Plus; Dolby TrueHD; DTS Digital Surround; DTS-HD; WMA

Serial Remote Connector: 9-pin D-Sub female, RS-232C, Mode: Full duplex, Baud Rate: 9600 or 38400 bps (selectable)

Ethernet Connector: LAN port, Standards: Ethernet (10 Mbps), Fast Ethernet (100 Mbps)

Provide:

1-Each, Denon DN-500BD Pro Blu-Ray DVD player. – Or Equal

r. CATVRX1-1 to CATVRX1-3

RF Input: Air/Cable, ‘F’, female, 75 ohm impedance, supports dual Cable and Air tuning with optional RF-AB RF A-B Switch, New digital RF tuning for improved sensitivity

HD Outputs: HDMI and switchable RGB/Component outputs operate simultaneously

HDMI: HDMI receptacle (720p@59.94 Hz, 1080p/1080i/480p@ 29.97 Hz), version 1.3, PCM/AC3 digital audio, HDCP

Audio Outputs: All operate simultaneously, including HDMI audio

Digital Audio: S/PDIF: Coax and TOSlink optical output, Dolby 5.1, PCM, or PCM variable

Stereo Audio: 2 stereo RCA female jacks, variable level

Control Options: RJ-45: 10/100 Ethernet connector, Telnet control and onboard Web page. Supports 2 Telnet sessions, RS-232: DB-9 male, RS-232 data link to control system (protocol is the same for RS-232 or Telnet), 300 to 19,200 baud (9600 default), 8 data bits, no parity, 1 stop bit

Provide:

1-Each, Contemporary Research 232-ATSC 4, Off Air HDTV Tuner, with RS232 Control. – Or Equal

1-Each, Contemporary Research RK1, Single Rack Kit, 1RU.

s. SCLBRDG1-1

Video input and loop through

Number/signal type: 1 HDMI/DVI (HDCP compliant), 1 HDMI/DVI loop-through (HDCP compliant)

Connectors: 1 female HDMI, 1 female HDMI loop-through

Horizontal frequency: 15 kHz to 100 kHz

Vertical frequency: 24 Hz to 75 Hz

Resolution range: 640x480 through 1600x1200, 1920x1200 (with reduced blanking), 480i, 576i, 480p, 720p, 1080i, and 1080p

Digital pixel data bit depth: 8, 10, and 12 bits per channel; 165 MHz pixel clock

Standards: DVI 1.0, HDMI 1.4, HDCP 1.3

Video processing: Colors: 11 million (8-bit 4:2:2 processing)

Video output: Number/signal type 1 USB digital video

Connectors: 1 female USB type B

USB scaled resolutions: 320x1801,2, 320x2401,2, 424x2401,2, 640x3601,2, 640x4801,2, 848x4801,2, 960x5401,2, 720p1,2, 1080p1, 1 = at 15 Hz, 2 = at 30 Hz

USB encoding: Number/signal type 1 USB (scaled, non-HDCP compliant)

Vertical frequency: 15 Hz, 30 Hz

Video encoding: MJPEG

Resolution: 320x180 through 1080p

Audio: PCM, 24-bit, 48 kHz,

Bit rate: Up to 60 Mbps

USB standards: USB 2.0, high speed

Provide:

1-Each, Extron MediaPort 200, 60-1488-01, HDMI and Audio to USB Scaling Bridge. – Or Equal

1-Each, Extron RSB 129 60-604-02, Basic Rack Shelf for 9.5" Deep Products. – Or Equal

t. CAM1-1 to CAM1-4

Image Sensor: 1/2.8”, 2.38 Megapixel, Full HD (1080p/60 native) High-speed, Low Noise CMOS Image Sensor

Lens: 30X Optical Zoom

Horizontal FOV 65° Wide end to 2.3° Tele end, f=4.3mm to 129mm, F1.6 to F4.7

Supported Resolutions HD Resolutions: 1080p/60/59.94/50/30/25, 1080i/60/59.94/50, 720p/60/59.94/50/30/25, 16:9 Format

Tri-Synchronous Motion: Concurrent PTZ motor movement and simultaneous PTZ arrival at a stored preset.

Advanced ISP: Vivid and accurate color with extremely fast, razor sharp automatic focus and iris routines.

S/N Ratio > 50 dB

Minimum Illumination 1.4 lux (F1.6, 50IRE), Recommended illumination >100 lux and above (Normal office lighting is 375-500 lux)

Minimum Distance 10mm (wide end) to 1.2m (tele end)

Pan & Tilt Angle/Speed Pan/Tilt Angles: ±160°, Tilt: +90° to -30°

Pan/Tilt Speeds: Both Axes 0.35°/sec to 120°/sec

Sync System Internal

Control Methods Ethernet for Internal Web Pages and Telnet, IR Remote Commander and RS-232 for external controllers

Dimensions/Weight 6.942” (176.3mm) H x 7.056” (179.2 mm) W x 6.757” (171.6mm) D

4.85 lbs. (2.199923 kg)

Provide:

4-Each, Vaddio RoboSHOT 30 QCCU, 999-9917-000W, HD quality PTZ camera, CCU quick connect and wall shelf. – Or Equal

2-Each, Vaddio Ceiling mount, 535-2000-206, suspended Ceiling Mount for Vaddio Cameras. – Or Equal

u. CAMCNTL1-1

Compatible Cameras: Vaddio, Panasonic, Sony & Canon (See Manual for Specific Models)

Video Formats Supported: NTSC and PAL

Video Switcher: 6 x 2 (or Two 6x1 in Dual Mode)

Video Transitions: Cross Fade, 9 Wipe options and Straight Cuts, Fade to Black

Video Inputs: Five (5) DE-15-F: RGBHV, HD Component (YPbPr), or Y/C & Composite using adapter cables, One (1) DVI-I (both DVI-D and DVI-A): HDMI 1.3 Receiver, Compliant with DVI, 1.0 and HDMI 1.3

Preview or Multiviewer Output: One (1) DE-15-F Preview or Multiviewer Output: RGBHV, HD Component, (YPbPr), or Y/C & Composite using adapter cables, One (1) DVI-D Preview or Multiviewer Output: HDMI 1.3 Transmitters, Compliant with DVI 1.0 and HDMI 1.3

Note: Same resolution on both Preview outputs

Program Output: One (1) DE-15-F Program Output: RGBHV, HD Component (YPbPr), or Y/C &

Composite using adapter cables, One (1) DVI-D) Program Output: HDMI 1.3 Transmitters, Compliant with DVI 1.0, and HDMI 1.3

Note: Same resolution on both Program outputs

Camera Control Ports: Six (6) RS-232 on RJ-45F

Control Interface: One (1) RS-232 on DB-9

LCD Display: 8-line backlit LCD display

Power Requirements: PowerRite 18 VDC, 2.78 Amp

Control Inputs for Auto Mode (input 1 & 2): Cameras 1 & 2 have 6 presets each or Camera 1 can have 12

Tally Output: Tally outputs for each of the six video inputs

Weight: 9.5 lbs. (4.32kg) – approximate weight

Dimensions (H x W x D): 4” (10.16cm) x 16” (40.64cm) x 10” (25.4cm)

Provide:

1-Each, Vaddio Production VIEW HD MV, 999-5625-000, Camera controller and production switcher. – Or Equal

v. PC1-1

1-Each, PC Computer with SKYPE Software, keyboard and mouse. (OFE)

w. PC1-2

1-Each, PC Computer for use with Shure DIS System software. (Computer, keyboard and mouse OFE) Shure DIS software to be provided by Contractor.

x. WRLSKYBRD/MS1-1 & 1-2

Provide:

2-Each, Wireless Computing RF-412, Combo package with RF keyboard and optical mouse with 50’ minimum range, (RF-240 & RF-172). – Or Equal

z. WCLB1-1

Wireless collaboration gateway with WAP

Integrated dual band wireless access point at 2.4 GHz or 5 GHz

Provides full screen mirroring for Apple iOS devices1

Simultaneous content display from up to four different personal devices

Dedicated mobile app, MirrorOp® for Extron ShareLink™, for reliable iOS and Android content sharing

Collaboration mode allows any attendee to display content and control the presentation

Full-motion video playback from laptops, enables display of media files from a Windows or OS X computer at up to 30 fps for a smooth viewing experience

Security codes ensure content is delivered only to the selected display devices

Displays content directly from a USB flash drive

Full screen or four-window display

Power over Ethernet, or PoE, eliminates the need for a local power supply

Gigabit Ethernet

Three USB ports for peripheral support

HDMI and VGA video outputs

Plenum rated - meets UL 2043 for heat and smoke release, excluding power supply

Front-mounted antennas for easy rack installation

1-Each, Extron ShareLink 250, 60-1508-01 or equal

6. Audio Equipment

a. DSP3-1

12 mic/line level inputs with AEC, 8 mic/line level outputs

Up to 8 channels of configurable USB audio

RS-232 serial port

4-pin GPIO

Standard telephone interface via a RJ-11 connector

Provide:

1-Each, Biamp Tesira Forte AVB TI, POTs line input. – Or Equal

b. DSP4-1

12 mic/line level inputs with AEC, 8 mic/line level outputs

Up to 8 channels of configurable USB audio

RS-232 serial port

4-pin GPIO

SIP VoIP interface via a RJ-45 connector

Provide:

1-Each, Biamp Tesira Forte AVB VI, VoIP input. – Or Equal

c. DSP5-1

Supports up to 3 DSP-2 cards

Up to 12 I/O cards with a maximum of 48 channels of analog audio

Up to 420 x 420 channels of digital I/O over AVB

Supports optional 32 x 32 CobraNet audio networking

Supports optional 64 x 64 Dante audio networking

System configuration and control via Ethernet or serial connection

Front panel OLED display for device and system information

SpeechSense and AmbientSense processing algorithms

Signal processing via intuitive software allows configuration and control for: signal routing and mixing, equalization, filtering, dynamics, delay and much more

Wide selection of I/O cards available

4-channel Acoustic Echo Cancellation card (also includes AGC and ANC) and Ambient Noise Compensation card available

Rack mountable (3RU)

CE marked, UL listed and RoHS compliant

Provide:

1-Each, Biamp Tesira Server-IO AVB. – Or Equal

1-Each, Biamp Tesira AVB-1 network card. – Or Equal

1-Each, Biamp Tesira DSP-2 card. – Or Equal

9-Each, Biamp Tesira SEC-4, Audio Input Card (4 channels). – Or Equal

d. AREC1-1 & AREC1-2

Records to SD/SDHC and USB media in MP3 and WAV (up to 24-bit/96kHz)

Dual Record feature (records to two media options simultaneously for primary and backup recording)

Relay Record feature (continues recording to backup media when primary media is full)

File Archiving via FTP (Automatic or Timed) with 24/7 record feature

Web Remote for setup and control with Password Protection

Independent switchable XLR Mic/Line inputs with +48V Phantom Power

Timer recording/playback (30 schedules available)

IP, RS-232c, GPIO, USB keyboard remote control

Front panel USB keyboard connection

NTP supported (Network Time Protocol)

EDL marking & file edit functions (Move, Copy, Combine and Divide)

Record monitor (listen the recorded signal while recording)

Large, bright OLED display

DMP Mark Editor software included (Windows only)

Provide:

2-Each, Denon DN-700R, Pro Digital Audio Recorder. – Or Equal

e. AMP1-1 to AMP1-2

2-Each, QSC Audio CX302V, OCFA Furnished Amplifiers.

f. SPRK1-1

1-Each, Renkus Heinz Speaker, OCFA furnished.

g. SPKR2-1 to SPKR2-x

x-Each, Ceiling Speakers, OCFA Furnished.

h. WMRX1-1

RF Carrier Frequency Range 470–937.5 MHz, varies by region

Image Rejection >70 dB, typical

Latency <2.9 ms

RF Sensitivity -97 dBm at 10-5 BER

Working Range 100 m (328 ft.) line-of-sight Note: Actual range depends on

RF signal absorption, reflection and interference.

Audio Frequency Range 20 Hz to 20 kHz Note: Dependent on microphone type.

Audio Dynamic Range >120 dB, A-weighted, typical

(System Gain @ +10)

Total Harmonic Distortion <0.1%, (−12 dBFS input, System Gain @ +10)

Provide:

1-Each, Shure QLXD24/B58, Digital Wireless Microphone System with Hand Held Mic Transmitter. – Or Equal

i. WMRX1-2

RF Carrier Frequency Range 470–937.5 MHz, varies by region

Image Rejection >70 dB, typical

Latency <2.9 ms

RF Sensitivity -97 dBm at 10-5 BER

Working Range 100 m (328 ft.) line-of-sight Note: Actual range depends on

RF signal absorption, reflection and interference.

Audio Frequency Range 20 Hz to 20 kHz Note: Dependent on microphone type.

Audio Dynamic Range >120 dB, A-weighted, typical (System Gain @ +10)

Total Harmonic Distortion <0.1%, (−12 dBFS input, System Gain @ +10)

Provide:

1-Each, Shure QLXD14/83, Digital Wireless Microphone System with Belt pack transmitter and lapel microphone. – Or Equal

j. ANTDA1-1

Antenna Splitter/Combiner.

Wideband UHF (470-952 MHz)

Four-way active antenna splitter

Front-mounting antenna hardware

Rack-mounting hardware

External power supply

Antenna cables for receiver connections

DC power cables for receiver connections

Provide:

1-Each, Shure UA844SWB Antenna Splitter/Combiner.

k. ANTDA1-1 & ANTDA1-2

Provide:

1-Set, Shure US221RF, Passive Antenna Splitter. – Or Equal

2-Each, 1-Gang plates with BNC Bulkhead connectors. – Or Equal

l. Plates

Provide:

2-Each, RCI PC-G1320-E-S-W, Audio output plate with single XLR-F, white with black engraving, 1-Gang (custom engraved label "Press Feed") – Or Equal

m. AVBNETSWT1-1

AVB Network Switch

AVB ports: 5

Ethernet ports: 1, (Note: the five AVB ports can also be used for Ethernet)

Operational bandwidth: 10 / 100 / 1 Gigabit

Front panel: 12 x activity LED

Power: 8-18V DC • 0.5A • tip positive

Dimensions: Length: 5 ½ in / 14 cm, Width: 3 ⅝ in / 9.2 cm, Height: 1 ⅛ in / 2.7 cm

Provide:

1-Each, MOTU 9305, 5 Port AVB Ethernet Switch – Or Equal

n. MIC2-1

1-Each, 15” Goose Neck Cardioid Microphone with shock mount base (podium), Shure MX415C or equal

o. MIC3-1

1-Each, Voice Communication Microphone (AV Booth), Shure 522 or equal

p. SPKR1-1

Speaker Section

Units 110 x 40 mm antimagnetic cone speakers

Frequency Response: 200 Hz – 20 kHz

Amplifier Section

Rated Output Power 10W x 2

Digital Input: XLR-3-31 connector (AES/EBU)

Sampling Frequency: 44.1 kHz to 96 kHz

Analog Inputs: XLR-3-31 connector (balanced)

Rated input level: +4/0dBu

Input Impedance: 10k ohm or more

1/4” Phone jack (unbalanced)

Rated input level: -10/-14 dBV

Input Impedance: 10k ohm or more

Digital THRU XLR-3-31 connector (AES/EBU)

Analog THRU XLR-3-31 / 1/4” TS phone

Phones: 1/4” stereo phones

Adapted load impedance: 16 ohm or more

Maximum output: 20mW + 20mW (32ohm, 1kHz)

Level Meter 26-dot LED x 2

Reference Level: Digital -20dBFS

Analog XLR +4/9dBu; TS phone -10/-14dBV

Distortion (T.H.D.) 0.1% or less

Dimensions: 482 (H) x 44 (W) x 284 (D) mm (including protruding parts)

Weight: approx. 3.5 kgs

Power Requirement: AC 100V to 240V 50/60Hz

Power Consumption: 10 W (0.5W or less in standby mode) - See more at:

1-Each, Fostex RM-3 or equal

7. Microphone, Speaker and Voting System - Discussion System & Software

a. DCS1-1 & DCS1-2

Conference unit for chairmen and delegates

Fully digital audio transmission

Open cable topology with loop through connections in daisy chains

DCS-LAN connection by use of CAT 5e (or higher) F/UTP or U/FTP cabling

Maximum 3800 conference units per system

Support for 4 microphone operation modes; Automatic, FIFO, Manual and VOX (voice activation)

Support for 3 microphone interrupt ability modes enabling 'ping pong' mode

Auto off of conference units

Lockable XLR gooseneck microphone connector

High-quality loudspeaker

2 channel selectors supporting the floor channel and 31 interpretation channels

2 headphone sockets

Microphone and function (all delegates off/mute) buttons

Exchangeable buttons for changing the button labels to other languages and other functionality.

Provide:

3-Each, Shure DC 6190 P, Portable Conference Unit, Base Unit (1 spare). – Or Equal

b. DCS2-1 to DCS2-40

Provide:

43-Each, Shure DM 6190 P, Portable Conference Unit, (2 spares). – Or Equal

c. DCSCCU1-1

System central control for the DCS 6000 Digital Discussion system

Powers up to 60 units without an extra power supply

Supports a system of up to 500 conference units and 128 interpretation stations

Supports up to 16 interpretation channels and a floor mix of up to eight open microphones

Expanded functionality with SW 6000 Conference Management software

Multi-language web browser for system configuration, microphone control and basic operational parameters

RJ-45 ports provide power, audio, and control transport across a chain of chairman, delegate, and interpretation units

Daisy-chain topology with loop-through connections or star topology

Digital audio transmission with proprietary codec algorithm prevents unauthorized listening of the audio signal

DCS-LAN connection using CAT 5e (or higher) shielded F/UTP or U/

FTP cabling

Supports Reply functionality to briefly comment or ask a question to the present speaker

Support for 4 microphone modes; Automatic, FIFO and Manual and

VOX (voice activation)

Four analog audio outputs for group or interpretation channels

TCP/IP Ethernet connection for browser control, SW 6000 and third party external control (AMX, Crestron etc.)

Built-in table for attaching seat numbers/names to units using a browser

Provide:

1-Each, Shure CU 6105, Central Control Unit, fully digital. – Or Equal

1-Each, Shure FL 6000 4A, Feature License. – Or Equal

1-Each, Shure SW 6000, Conference Management Software. – Or Equal

2-Each, Shure SW 6008, CUA – Conference User Application. – Or Equal

1-Each, Shure SW 6010, Microphone Control Module. – Or Equal

1-Each, Shure SW 6020, Delegate information table and user profiles software module. – Or Equal

1-Each, Shure SW 6110 50, Advanced Microphone Control. – Or Equal

d. DCSEXT1-1

Provide:

1-Each, Shure EX 6010, DCS LAN Extension Unit: Includes 4 Repeated outputs with 125-Watt power. – Or Equal

e. MIC1-1 to MIC1-42

Cardioid pattern

RF resistant due to the unique DIS RF Shield

Flexible gooseneck

Illuminated light ring on microphone capsule

XLR plug

Back-Electret condenser microphone capsule

High close talk SPL level

Low noise level

Provide:

42-Each, Shure GM6525, 63 cm long, Black w/XLR plug Goose Neck Microphones.

f. Shure DCS System Cables & Misc.

Provide:

36-Each, Shure EC 6001-02, Cable, 2 m, Black, STP Cat. 5e incl. connectors (RJ45) for DDS 5900 & DCS 6000. – Or Equal

5-Each, Shure EC 6001-30, Cable, 30 m, Black, STP Cat. 5e incl. connectors (RJ45) for DDS 5900 & DCS 6000. – Or Equal

10-Each, Shure DH 6001 H, Lightweight Headphones, 600 Ohms. – Or Equal

8. ALS System – Existing System

a. ALSTX1-1

1-Each, Sennheiser SZI1015-W, IR Assistive Listening System Radiator Panel. (OFE)

1-Each, Sennheiser SI 1015, Wideband Modulator. (OFE)

Provide:

1-Each, Sennheiser SZI1015-W, IR Assistive Listening System Radiator Panel. (NEW)

2-Each, Sennheiser EZT3011, Induction loops. (NEW)

2-Each, Sennheiser EKI830, IR receiver. (NEW)

9. Control System

a. CNTR1-1

Memory: SDRAM 512 MB, Flash 4.5 GB

Software and control options: Software Extron Global Configurator® Plus and Professional for Windows®

Ethernet control: Network interface controllers (NICs) 1, Connector 1 female RJ-45 connector, Data rate: 0/100/1000Base-T, half/full duplex with autodetect.

Protocols: DHCP, DNS, HTTP, HTTPS, ICMP, NTP, SFTP, SMTP, SNMP, SSH, TCP/IP, UDP/IP

Default settings: Link speed and duplex level = autodetected

Serial control: 2 bidirectional RS-232, RS-422, RS-485 (ports 7 and 8), 6 bidirectional RS-232 (ports 1 through 6), (2) 3.5 mm captive screw connectors, 5 pole, (6) 3.5 mm captive screw connectors, 3 pole

Baud rate and protocol: 300 to 115200 baud (9600 baud = default); 8 (default) or 7 data bits; 1 (default) or 2 stop bits; no parity (default), even, odd, mark, or space parity

Flex I/O control: 4 analog input or digital input/output (configurable), (1) 3.5 mm captive screw connector, 5 pole

Digital inputs: Input voltage range 0 to 24 VDC, clamped at +30 VDC, Input impedance 29k ohms, Programmable pullup 1k ohms to +5 VDC

Baud rate and protocol (RS-232) 300 to 115200 baud (9600 baud = default); 8 (default) or 7 data bits; 1 (default) or 2 stop bits; no parity (default), even, odd, mark, or space parity

Relay control: 8 normally open relays, Relay control connectors, (4) 3.5 mm captive screw connectors, 4 pole, Relay control contact rating 24 VDC, 1 A

eBUS control: eBUS control ports (1) 3.5 mm captive screw connector, 5 pole (uses 4 poles), eBUS pin configuration: +V = +12 VDC; +S = + signal; -S = - signal; G = ground

Provide:

1-Each, Extron, IPCP 550, 60-1418-01, IP Link Pro Controller. – Or Equal

1-Each, Extron RSU 129, 60-190-01, Universal Rack Shelf Kit. – Or Equal

b. TP1-1

Screen type: Active matrix TFT color display

Size: 10.1" (25.7 cm), measured diagonally

Resolution: 1024x600

Dot/pixel pitch: 118 dpi

Aspect ratio: Widescreen

Color depth: 256k colors

Transparency: 8 bit alpha channel

Brightness: 200 nits (cd/m2)

Contrast: 500:1

Backlight: LED

Viewing angle: ±70° horizontal, +50°/-60° vertical

Touch screen: Resistive

Memory: SDRAM 512 MB, Flash 512 MB

Ethernet control/communications port: 1 RJ-45 female connector, Ethernet data rate 10/100Base-T, half/full duplex with autodetect, Ethernet protocol DHCP, DNS, HTTP, HTTPS, ICMP, SFTP, SSH, TCP/IP, UDP/IP

Motion sensor: On/off

Light sensor: On/off

Provide:

2-Each, Extron TLP Pro 1022T, 60-1393-02, Table Top 10” Pro Touch Panel. – Or Equal

1-Each, Extron power supply for TLP PRO 1022T, (70-775-01). – Or Equal

1-Each, Extron POE XTP PI 140, 60-1361-01 Power injector for staff table 10” TP. – Or Equal

c. TP2-1

Screen type: Active matrix TFT color display

Size: 12.1" (30.7 cm), measured diagonally

Resolution: 1280x800

Dot/pixel pitch: 125 dpi

Aspect ratio: Widescreen

Color depth: 24-bit, 16.7 million colors

Transparency: 8 bit alpha channel

Brightness: 360 nits (cd/m2)

Contrast: 950:1

Backlight: LED

Viewing angle: ±88° horizontal, ±88° vertical

Touch screen: Capacitive

Memory: SDRAM 512 MB, Flash 512 MB

Provide:

1-Each, Extron TLP Pro 1220TG, 60-1341-02, 12" Tabletop TouchLink Pro Touch panel. – Or Equal

1-Each, Extron power supply for TLP PRO 1220TG. (70-769-01. – Or Equal

d. AVNET1-1

Provide:

1-Each, Cisco, Catalyst 2960X-24 PD-L, Network Switch with POE. – Or Equal

e. Microphone Mute Button

Provide:

1-Each, RDL D-ERC1 Decora module (white). – Or Equal

1-Each, Extron, SMP100 1-gang surface mount box (60-1292-02). – Or Equal

10. Voting System.

a. Provide

32-Each, handheld roll call voting modules

1-Each, Clerks Control module

1-Each, Power Supply

2-Each, Large Display Panels (24” wide, 48” high, able to display 16 names per panel)

Provide:

ElectroVote Roll Call Voting System or equal

11. Racks and Misc.

a. RACKs, Existing OCFA furnished

b. Power Strips/conditioners

Maximum Output Current: 20 amps

Line Cord: Captive 3/12 AWG, 10 ft. black cord with NEMA 20 plug

Pull-out Lights: Two multi-LED, dimmable lamps

BNC Socket w/Switch: Rear rack lamp, 12VAC 500MA max (lamp not included)

Operating Voltage: 90 to 139 VAC

Spike Protection Mode: Line to neutral, zero ground leakage

Spike Clamping Voltage: 188 VAC peak @ 3,000 Amps

Response Time: 1 nanosecond

Maximum Surge Current: 6,500 Amps

Noise Attenuation: 10 dB @ 10 kHz, 40 dB @ 100 kHz, 50 dB @ 500 kHz

Dimensions: 19” W x 10.5” D x 1.75” H

Weight: 12 lbs.

Power Consumption: 12 watts

Safety Listing: cTUVus

Provide:

2-Each, Furman, PL-8 PRO-C. – Or Equal

c. Acoustic Treatment

Provide:

6-Each, Primacoustic, 24” x 48” panel, 2” square edge, custom cut to fit ceiling disc, (F121-2448-09). – Or Equal

6-Each, Primacoustic, twist-in cloud anchor (package of 12) F10-1007-00. – Or Equal

d. WKYBDMS1-1 and WKYBDMS1-2

RF Wireless keyboard & optical mouse, 50' range minimum (for OFE PCs)

2-Each, Wireless Computing RF-412 or equal

B. Classroom/Break-out Room AE117

1. Digital Video Equipment

a. PROJ1-1

Filter: Long lasting eco filter (up to 15,000 hours)

Brightness: 4,001 to 6,000 lm

Diagonal Screen Size: 1.02–10.16 m (40–400 inches) (16:10 aspect ratio

Technology: LCD, highly durable optical engine with inorganic LCD panels and polarizers providing up to 10,000 hours of maintenance free service.

Resolution: WUXGA, 1920 x 1200

Lens: Standard or as needed

Provide:

1-Each, Panasonic PT-EZ570UL, 5000 ANSI Lumen, 1920 x 1200 (16:10), 3 LCD, Projector. – Or Equal

1-Each, Panasonic ET-LAE200, projector lamp, spare. – Or Equal

1-Each, Panasonic ET-REF200, projector filter, spare. – Or Equal

1-Each, Chief Mfg. RPMA302, RPA Elite Universal & Custom Ceiling Projector Mounts with Keyed Locking. – Or Equal

b. SCN1-1

1-Each, OCFA Furnished Da-Lite Manual Pull-Down Screen.

c. DTPSWT1-1

All‑in‑one 8x6 4K matrix switcher, scaler, audio DSP with AEC,

Two DTP inputs and six HDMI inputs

Two HDMI outputs and four independently scaled DTP outputs

4K matrix switching and scaling with selectable seamless transitions and logo keying

Integrated DTP inputs and outputs support transmission of video, control, and audio up to 330 feet (100 meters) over a shielded CATx cable

Vector™ 4K scaling engine

4K matrix switching and scaling with selectable seamless transitions and logo keying

Selectable scaled DTP output rates from 640x480 to 4K

Provide:

1-Each, Extron DTP CrossPoint 86 4K, 60-1382-01, Digital Switcher, Preamp Output, w/o Amplifier and Control Processor, 4K backbone. – Or Equal

d. DTPTX1-1

Transmits HDMI or analog video, control, and analog audio up to 230 feet (70 meters) over a shielded CATx cable

Inputs: One HDMI, one VGA on 15‑pin HD, two 3.5 mm stereo mini jacks for audio

One HDMI input and one VGA input — The DTP T UWP 232 D allows for switching between HDMI and analog video sources.

Auto‑switching between inputs

Supports computer and video resolutions up to 1920x1200, including 1080p/60 and 2K

Analog stereo audio embedding

Extron XTP DTP 24 shielded twisted pair cable is strongly recommended for optimal performance

Independent analog audio inputs

Supports multiple embedded audio formats

Bidirectional RS‑232 and unidirectional IR pass‑through for AV device control

Remote power capability

Digital conversion of analog input signals

HDCP compliant

Supported HDMI specification features include data rates up to 6.75 Gbps, 3D, and HD lossless audio formats

EDID Minder

Supports EDID and HDCP transmission

RS-232 control

Contact closure control port

Mounts in an included two-gang Decora®‑style wall plate

Provide:

1-Each, Extron DTP T UWP 232 D, 60-1366-13, DTP Transmitter, HDMI, VGA, WP Decora, White. – Or Equal

e. DTPRX1-1 and DTPRX1-2

Receives HDMI plus control and analog audio up to 230 feet (70 meters) over a shielded CATx cable — The DTP HDMI 4K 230 Rx provides high reliability and maximum performance on an economical and easily installed cable infrastructure.

Outputs: One HDMI, stereo audio on captive screw

Supports computer and video resolutions up to 4K

Extron XTP DTP 24 shielded twisted pair cable is strongly recommended for optimal performance

Supports multiple embedded audio formats

Supported HDMI specification features include data rates up to 10.2 Gbps, Deep Color up to 12-bit, 3D, HD lossless audio formats, and CEC pass-through

HDCP 2.2 compliant

Supports EDID and HDCP transmission.

Bidirectional RS-232 and IR for AV device control.

Remote power capability

Provide:

2-Each, Extron DTP HDMI 4K 230 Rx, 60-1271-13, DTP HDMI Receiver. – Or Equal

f. BD1-1

Digital media player (Blu-ray Disc, DVD, CD, USB device [mass storage class]) AVCHD playback format

Supported Disc Formats: Blu-ray Disc: BD25, BD50, BD-ROM, BD-R, BD-RE

DVD: DVD, DVD+R, DVD-R, DVD+RW, DVD-RW

CD: CD, CD-R, CD-RW, DTS Music Disc (DTS Audio CD, 5.1 Music Disc), HDCD, Super Video CD (SVCD), Video CD (VCD)

Video Resolutions: Auto, 480i/576i, 480p/576p, 720p, 1080i, 1080p

Aspect Ratios: 16:9 Full, 16:9 Normal, 4:3 Pan & Scan, 4:3 Letterbox

System NTSC, PAL, Multi (if supported by TV)

HDMI Color Space: RGB PC Level, RGB Video Level, YCbCr (4:4:4), YCbCr 4:2:2

Output: HDMI > v1.4 (3D), HDCP 1.4

Decoding: Video: DivX 3, 4, 5, 6; DivX HD; MPEG-1; MPEG-2; MPEG-4; MPEG-4 AVC (H.264); VC-1 (Windows Media Video); Xvid

Audio: AAC; Dolby Digital; Dolby Digital Plus; Dolby TrueHD; DTS Digital Surround; DTS-HD; WMA

Serial Remote Connector: 9-pin D-Sub female, RS-232C, Mode: Full duplex, Baud Rate: 9600 or 38400 bps (selectable)

Ethernet Connector: LAN port, Standards: Ethernet (10 Mbps), Fast Ethernet (100 Mbps)

Provide:

1-Each, Denon DN-500BD, Blu-Ray Disk Player. – Or Equal

g. SMP1-1

Process two high resolution AV signals from up to five available inputs

Stream and record simultaneously

High quality scaling with flexible two-window management

Produces MP4 media files that are compatible with virtually any media player

Available with 400 Gigabytes of internal solid state storage to allow more time between content transfers

Save recordings to internal solid state drive, external USB storage, or a defined network storage directory

Stream concurrently at two resolutions and bit rates

Stream at resolutions from 512x288 to 1080p/30

Internal Solid State Storage

HDCP-compliant input and output signal management

HDMI-embedded stereo audio or analog stereo input and output signal support

Audio mixing and DSP functionality

RS‑232, Ethernet, and digital I/O control ports

Supports source resolutions up to 1920x1200, including HDTV 1080p/60

Standards-based H.264 / MPEG‑4 AVC video compression

Provide:

1-Each, Extron SMP 351, 60-1324-01, H.264 Streaming Media Processor, Standard Version – 80 GB SSD. – Or Equal

h. CATVRX1-1

RF Input: Air/Cable, ‘F’, female, 75 ohm impedance, supports dual Cable and Air tuning with optional RF-AB RF A-B Switch, New digital RF tuning for improved sensitivity

HD Outputs: HDMI and switchable RGB/Component outputs operate simultaneously

HDMI: HDMI receptacle (720p@59.94 Hz, 1080p/1080i/480p@ 29.97 Hz), version 1.3, PCM/AC3 digital audio, HDCP

Audio Outputs: All operate simultaneously, including HDMI audio

Digital Audio: S/PDIF: Coax and TOSlink optical output, Dolby 5.1, PCM, or PCM variable

Stereo Audio: 2 stereo RCA female jacks, variable level

Control Options: RJ-45: 10/100 Ethernet connector, Telnet control and onboard Web page. Supports 2 Telnet sessions, RS-232: DB-9 male, RS-232 data link to control system (protocol is the same for RS-232 or Telnet), 300 to 19,200 baud (9600 default), 8 data bits, no parity, 1 stop bit

Provide:

1-Each, Contemporary Research 232-ATSC 4, Off Air HDTV tuner with RS232 control. – Or Equal

1-Each, Contemporary Research RK1, Single Rack Kit, 1RU. – Or Equal

i. CAM1-1

Image Sensor: 1/2.8”, 2.38 Megapixel, Full HD (1080p/60 native) High-speed, Low Noise CMOS Image Sensor

Lens: 30X Optical Zoom

Horizontal FOV 65° Wide end to 2.3° Tele end, f=4.3mm to 129mm, F1.6 to F4.7

Supported Resolutions HD Resolutions: 1080p/60/59.94/50/30/25, 1080i/60/59.94/50, 720p/60/59.94/50/30/25, 16:9 Format

Tri-Synchronous Motion: Concurrent PTZ motor movement and simultaneous PTZ arrival at a stored preset.

Advanced ISP: Vivid and accurate color with extremely fast, razor sharp automatic focus and iris routines.

S/N Ratio > 50 dB

Minimum Illumination 1.4 lux (F1.6, 50IRE), Recommended illumination >100 lux and above (Normal office lighting is 375-500 lux)

Minimum Distance 10mm (wide end) to 1.2m (tele end)

Pan & Tilt Angle/Speed Pan/Tilt Angles: ±160°, Tilt: +90° to -30°

Pan/Tilt Speeds: Both Axes 0.35°/sec to 120°/sec

Sync System Internal

Control Methods Ethernet for Internal Web Pages and Telnet, IR Remote Commander and RS-232 for external controllers

Dimensions/Weight 6.942” (176.3mm) H x 7.056” (179.2 mm) W x 6.757” (171.6mm) D

4.85 lbs. (2.199923 kg)

Provide:

1-Each, Vaddio RoboSHOT 30 QCCU, 999-9917-000W, HD quality PTZ camera, CCU quick connect and wall shelf. – Or Equal

j. CAM2-1

Image Device: 1/2.8”, 2.14 Megapixel, Full HD (1080p/60 native) High-speed, Low Noise CMOS Image Sensor

Supported Resolutions HD Resolutions: 1080p/60/59.94/50/30/25, 1080i/60/59.94/50, 720p/60/59.94/50/30/25, Format varies depending on video resolution, USB 2.0 and 3.0 video resolutions/frame rates, all USB resolutions uncompressed

Streaming, IP (H.264, RTSP + USB 3.0 (UVC)

Lens: 10X Optical Zoom, Super Wide 11X Optical Zoom

S/N Ratio > 50 dB

Minimum Illumination Recommended illumination >100 lux

Minimum Distance 10mm (wide end) to 1.0m (tele end)

Pan & Tilt Angle/Speed Pan/Tilt Angles: ±170°, Tilt: +90° to -30°

Pan/Tilt Speeds: Both Axes 90°/sec

Horizontal FOV 67° Wide end (74° degrees in super wide mode) to 7.6° Tele end, f=3.8mm to 41.8mm, F1.8 to F3.4

Control Methods Ethernet for Internal Web Pages and Telnet, IR Remote Commander and RS-232 for external controllers

Gain – Auto or Manual

Backlight Compensation – On or Off

White Balance – Auto, Manual, One-Push

Noise Reduction – On or Off

Aperture/Detail – 16 steps (via all remote management interfaces)

Dimensions/Weight 6.3” (163 mm) H x 6.1” (155 mm) W x 5.5” (145 mm) D

3 lbs. (1.36 kg)

Provide:

1-Each, Vaddio ClearSHOT 10 USB, 999-9990-000W, HD quality PTZ camera, CCU quick connect and wall shelf. – Or Equal

k. WCLB1-1

Wireless collaboration gateway with WAP

Integrated dual band wireless access point at 2.4 GHz or 5 GHz

Provides full screen mirroring for Apple iOS devices1

Simultaneous content display from up to four different personal devices

Dedicated mobile app, MirrorOp® for Extron ShareLink™, for reliable iOS and Android content sharing

Collaboration mode allows any attendee to display content and control the presentation

Full-motion video playback from laptops, enables display of media files from a Windows or OS X computer at up to 30 fps for a smooth viewing experience

Security codes ensure content is delivered only to the selected display devices

Displays content directly from a USB flash drive

Full screen or four-window display

Power over Ethernet, or PoE, eliminates the need for a local power supply

Gigabit Ethernet

Three USB ports for peripheral support

HDMI and VGA video outputs

Plenum rated - meets UL 2043 for heat and smoke release, excluding power supply

Front-mounted antennas for easy rack installation

1-Each, Extron ShareLink 250, 60-1508-01 or equal

l. HDMISW1-1

Switches HDMI video and embedded multi-channel digital audio

Inputs: 4 female HDMI type A connectors

Output: 1 female HDMI type-A connector

EDID Minder® automatically manages EDID communication between connected devices

Supports computer video up to 1920x1200, including HDTV 1080p/60 and 2K

Supported HDMI specification features include data rates up to 6.75 Gbps, Deep Color up to 12-bit, 3D, Lip Sync, and HD lossless audio formats

HDCP compliant

Automatic color bit depth management

HDMI to DVI Interface Format Correction

Automatic input cable equalization to 50 feet at 1080p/60 with 8-bit color

Provides +5 VDC, 250 mA power on the output for external peripheral devices

Front panel security lockout

Multiple control options including front panel, RS-232, IR, contact closure, and auto-input switching

1-Each, Extron SW HD 4K, 60-1484-01, - or Equal

2. Audio Equipment

a. DSP1-1

12 mic/line level inputs with AEC, 8 mic/line level outputs

Up to 8 channels of configurable USB audio

RS-232 serial port

4-pin GPIO

Provide:

1-Each, Biamp Tesira Forte AVB AI, Digital Signal Processor. – Or Equal

b. DSP2-1

Up to 3 I/O cards: EIC-4, EEC-4, EOC-4, and EIOC-4

Up to 12 channels of analog audio

AVB connection to Tesira system for audio networking, configuration and control

Plug-in barrier strip connections on cards

Front panel LEDs for device status indications

Internal universal power supply

Rack mountable (1RU)

CE marked, UL listed, RoHS compliant

Provide:

1-Each, Biamp Tesira EX-MOD, expansion module. – Or Equal

2-Each, Biamp EIC-4, 4 microphone/line level input card. – Or Equal

c. AVBNETSWT1-1

AVB Network Switch

AVB ports: 5

Ethernet ports: 1, (Note: the five AVB ports can also be used for Ethernet)

Operational bandwidth: 10 / 100 / 1 Gigabit

Front panel: 12 x activity LED

Power: 8-18V DC • 0.5A • tip positive

Dimensions: Length: 5 ½ in / 14 cm, Width: 3 ⅝ in / 9.2 cm, Height: 1 ⅛ in / 2.7 cm

Provide:

1-Each, MOTU 9305, 5 Port AVB Ethernet Switch – Or Equal

d. WMRX1-1

RF Carrier Frequency Range 470–937.5 MHz, varies by region

Image Rejection >70 dB, typical

Latency <2.9 ms

RF Sensitivity -97 dBm at 10-5 BER

Working Range 100 m (328 ft.) line-of-sight Note: Actual range depends on

RF signal absorption, reflection and interference.

Audio Frequency Range 20 Hz to 20 kHz Note: Dependent on microphone type.

Audio Dynamic Range >120 dB, A-weighted, typical

(System Gain @ +10)

Total Harmonic Distortion <0.1%, (−12 dBFS input, System Gain @ +10)

Provide:

1-Each, Shure QLXD24/B58, Digital Wireless Microphone System with Hand Held Mic Transmitter. – Or Equal

e. WMRX1-2

RF Carrier Frequency Range 470–937.5 MHz, varies by region

Image Rejection >70 dB, typical

Latency <2.9 ms

RF Sensitivity -97 dBm at 10-5 BER

Working Range 100 m (328 ft.) line-of-sight Note: Actual range depends on

RF signal absorption, reflection and interference.

Audio Frequency Range 20 Hz to 20 kHz Note: Dependent on microphone type.

Audio Dynamic Range >120 dB, A-weighted, typical

(System Gain @ +10)

Total Harmonic Distortion <0.1%, (−12 dBFS input, System Gain @ +10)

Provide:

1-Each, Shure QLXD14/83, Digital Wireless Microphone System with Belt pack transmitter and lapel microphone. – Or Equal

f. CMIC1-1 to CMIC1-4

Provide:

Microflex ceiling microphone, cardioid pick-up, pre-amp, mounting plate, white,

4-Each, Shure MX22WP/C or equal

g. AMP1-1

1-Each, QSC Audio, CX302V Power Amplifier. (OFE)

f. SPKR1-1 to SPKR1-x

x-Each, Tannoy Ceiling Speakers. (OFE)

3. ALS System

a. ALSTX1-1 – Existing System

1-Each, Sennheiser SZI1015-W, IR Assistive Listening System Radiator Panel. (OFE)

1-Each, Sennheiser SI 1015, Wideband Modulator. (OFE)

Provide:

2-Each, Sennheiser EZT3011, Induction loops. (NEW)

2-Each, Sennheiser EKI830, IR receiver. (NEW)

4. Control System

a. CNTR1-1

Memory: SDRAM 512 MB, Flash 4.5 GB

Ethernet control: Network interface controllers (NICs) 1, Connector 1 female RJ-45 connector, Data rate: 0/100/1000Base-T, half/full duplex with autodetect.

Protocols: DHCP, DNS, HTTP, HTTPS, ICMP, NTP, SFTP, SMTP, SNMP, SSH, TCP/IP, UDP/IP

Default settings: Link speed and duplex level = autodetected

Serial control: 2 bidirectional RS-232, RS-422, RS-485 (ports 7 and 8), 6 bidirectional RS-232 (ports 1 through 6), (2) 3.5 mm captive screw connectors, 5 pole, (6) 3.5 mm captive screw connectors, 3 pole

Baud rate and protocol: 300 to 115200 baud (9600 baud = default); 8 (default) or 7 data bits; 1 (default) or 2 stop bits; no parity (default), even, odd, mark, or space parity

Flex I/O control: 4 analog input or digital input/output (configurable), (1) 3.5 mm captive screw connector, 5 pole

Digital inputs: Input voltage range 0 to 24 VDC, clamped at +30 VDC, Input impedance 29k ohms, Programmable pullup 1k ohms to +5 VDC

Baud rate and protocol (RS-232) 300 to 115200 baud (9600 baud = default); 8 (default) or 7 data bits; 1 (default) or 2 stop bits; no parity (default), even, odd, mark, or space parity

Relay control: 8 normally open relays, Relay control connectors, (4) 3.5 mm captive screw connectors, 4 pole, Relay control contact rating 24 VDC, 1 A

eBUS control: eBUS control ports (1) 3.5 mm captive screw connector, 5 pole (uses 4 poles), eBUS pin configuration: +V = +12 VDC; +S = + signal; -S = - signal; G = ground

Provide:

1-Each, Extron, IPCP 550, 60-1418-01, IP Link Pro Controller. – Or Equal

1-Each, Extron RSU 126, 60-190-10, Universal Rack Shelf Kit. – Or Equal

b. TP2-1

Screen type: Active matrix TFT color display

Size: 12.1" (30.7 cm), measured diagonally

Resolution: 1280x800

Dot/pixel pitch: 125 dpi

Aspect ratio: Widescreen

Color depth: 24-bit, 16.7 million colors

Transparency: 8 bit alpha channel

Brightness: 360 nits (cd/m2)

Contrast: 950:1

Backlight: LED

Viewing angle: ±88° horizontal, ±88° vertical

Touch screen: Capacitive

Memory: SDRAM 512 MB, Flash 512 MB

1-Each, Extron TLP Pro 1220TG, 60-1341-02, 12" Tabletop TouchLink Pro Touch panel. – Or Equal

c. POE1-1

Provide:

1-Each, Extron, XTP PI 140, 60-1363-01 Power injector. – Or Equal

d. NETSWT2-1

Provide:

1-Each, Cisco SG300-20, SRW2016-K9-NA, 20-Port Gigabit Ethernet Switch. – Or Equal

5. Racks and Misc.

a. RACKs, Existing OCFA furnished

b. Power Strips/conditioner

Maximum Output Current: 20 amps

Line Cord: Captive 3/12 AWG, 10 ft. black cord with NEMA 20 plug

Pull-out Lights: Two multi-LED, dimmable lamps

BNC Socket w/Switch: Rear rack lamp, 12VAC 500MA max (lamp not included)

Operating Voltage: 90 to 139 VAC

Spike Protection Mode: Line to neutral, zero ground leakage

Spike Clamping Voltage: 188 VAC peak @ 3,000 Amps

Response Time: 1 nanosecond

Maximum Surge Current: 6,500 Amps

Noise Attenuation: 10 dB @ 10 kHz, 40 dB @ 100 kHz, 50 dB @ 500 kHz

Dimensions: 19” W x 10.5” D x 1.75” H

Weight: 12 lbs.

Power Consumption: 12 watts

Safety Listing: cTUVus

Provide:

1-Each, Furman, PL-8 PRO-C – Or Equal

C. Classrooms 153 & 154

1. Digital Video Equipment

a. PROJ1-1 & PROJ1-2

Filter: Long lasting eco filter (up to 15,000 hours)

Brightness: 4,001 to 6,000 lm

Diagonal Screen Size: 1.02–10.16 m (40–400 inches) (16:10 aspect ratio

Technology: LCD, highly durable optical engine with inorganic LCD panels and polarizers providing up to 10,000 hours of maintenance free service.

Resolution: WUXGA, 1920 x 1200

Lens: Standard or as needed

Provide:

2-Each, Panasonic PT-EZ570UL, 5000 ANSI Lumen, 1920 x 1200 (16:10), 3 LCD, Projector. – Or Equal

2-Each, Panasonic ET-LAE200, projector lamp, spare. – Or Equal

2-Each, Panasonic ET-REF200, projector filter, spare. – Or Equal

2-Each, Chief Mfg. RPMA302, RPA Elite Universal & Custom Ceiling Projector Mounts with Keyed Locking. – Or Equal

b. SCN1-1 & SCN1-2

2-Each, OCFA Furnished Da-Lite Manual Pull-Down Screen.

c. DTPSWT1-1 & DTPSWT1-2

All‑in‑one 8x6 4K matrix switcher, scaler, audio DSP with AEC,

Two DTP inputs and six HDMI inputs

Two HDMI outputs and four independently scaled DTP outputs

4K matrix switching and scaling with selectable seamless transitions and logo keying

Integrated DTP inputs and outputs support transmission of video, control, and audio up to 330 feet (100 meters) over a shielded CATx cable

Vector™ 4K scaling engine

4K matrix switching and scaling with selectable seamless transitions and logo keying

Selectable scaled DTP output rates from 640x480 to 4K

Provide:

2-Each, Extron DTP CrossPoint 86 4K, 60-1382-01, Digital Switcher, Preamp Output, w/o Amplifier and Control Processor, 4K backbone. – Or Equal

d. DTPTX1-1 to DTPTX1-4

Transmits HDMI or analog video, control, and analog audio up to 230 feet (70 meters) over a shielded CATx cable

Inputs: One HDMI, one VGA on 15‑pin HD, two 3.5 mm stereo mini jacks for audio

One HDMI input and one VGA input — The DTP T UWP 232 D allows for switching between HDMI and analog video sources.

Auto‑switching between inputs

Supports computer and video resolutions up to 1920x1200, including 1080p/60 and 2K

Analog stereo audio embedding

Extron XTP DTP 24 shielded twisted pair cable is strongly recommended for optimal performance

Independent analog audio inputs

Supports multiple embedded audio formats

Bidirectional RS‑232 and unidirectional IR pass‑through for AV device control

Remote power capability

Digital conversion of analog input signals

HDCP compliant

Supported HDMI specification features include data rates up to 6.75 Gbps, 3D, and HD lossless audio formats

EDID Minder

Supports EDID and HDCP transmission

RS-232 control

Contact closure control port

Mounts in an included two-gang Decora®‑style wall plate

Provide:

4-Each, Extron DTP T UWP 232 D, 60-1366-13, DTP Transmitter, HDMI, VGA, WP Decora, White. – Or Equal

e. DTPRX1-1 to DTPRX1-9

Receives HDMI plus control and analog audio up to 230 feet (70 meters) over a shielded CATx cable — The DTP HDMI 4K 230 Rx provides high reliability and maximum performance on an economical and easily installed cable infrastructure.

Outputs: One HDMI, stereo audio on captive screw

Supports computer and video resolutions up to 4K

Extron XTP DTP 24 shielded twisted pair cable is strongly recommended for optimal performance

Supports multiple embedded audio formats

Supported HDMI specification features include data rates up to 10.2 Gbps, Deep Color up to 12-bit, 3D, HD lossless audio formats, and CEC pass-through

HDCP 2.2 compliant

Supports EDID and HDCP transmission.

Bidirectional RS-232 and IR for AV device control.

Remote power capability

Provide:

9-Each, Extron DTP HDMI 4K 230 Rx, 60-1271-13, DTP HDMI Receiver. – Or Equal

f. DTPTX2-1 to DTPTX2-2

Transmits HDMI plus control up to 230 feet (70 meters) over a shielded CATx cable

Inputs: One HDMI, one 3.5 mm stereo mini jack for audio

Supports computer and video resolutions up to 1920x1200, including 1080p/60 and 2K

Extron XTP DTP 24 shielded twisted pair cable is strongly recommended for optimal performance

Bidirectional RS‑232 and unidirectional IR pass‑through for AV device control

Remote power capability

Digital conversion of analog input signals

HDCP compliant

Supported HDMI specification features include data rates up to 6.75 Gbps, 3D, and HD lossless audio formats

EDID Minder

Supports EDID and HDCP transmission

RS-232 control

Contact closure control port

Provide:

2-Each, Extron DTP HDMI 4K 230 Tx, 60-1271-12, DTP HDMI Transmitter. – Or Equal

g. BD1-1 & BD1-2

Digital media player (Blu-ray Disc, DVD, CD, USB device [mass storage class]) AVCHD playback format

Supported Disc Formats: Blu-ray Disc: BD25, BD50, BD-ROM, BD-R, BD-RE

DVD: DVD, DVD+R, DVD-R, DVD+RW, DVD-RW

CD: CD, CD-R, CD-RW, DTS Music Disc (DTS Audio CD, 5.1 Music Disc), HDCD, Super Video CD (SVCD), Video CD (VCD)

Video Resolutions: Auto, 480i/576i, 480p/576p, 720p, 1080i, 1080p

Aspect Ratios: 16:9 Full, 16:9 Normal, 4:3 Pan & Scan, 4:3 Letterbox

System NTSC, PAL, Multi (if supported by TV)

HDMI Color Space: RGB PC Level, RGB Video Level, YCbCr (4:4:4), YCbCr 4:2:2

Output: HDMI > v1.4 (3D), HDCP 1.4

Decoding: Video: DivX 3, 4, 5, 6; DivX HD; MPEG-1; MPEG-2; MPEG-4; MPEG-4 AVC (H.264); VC-1 (Windows Media Video); Xvid

Audio: AAC; Dolby Digital; Dolby Digital Plus; Dolby TrueHD; DTS Digital Surround; DTS-HD; WMA

Serial Remote Connector: 9-pin D-Sub female, RS-232C, Mode: Full duplex, Baud Rate: 9600 or 38400 bps (selectable)

Ethernet Connector: LAN port, Standards: Ethernet (10 Mbps), Fast Ethernet (100 Mbps)

Provide:

2-Each, Denon DN-500BD, Blu-Ray Disk Player. – Or Equal

h. SMP1-1 & SMP1-2

Process two high resolution AV signals from up to five available inputs

Stream and record simultaneously

High quality scaling with flexible two-window management

Produces MP4 media files that are compatible with virtually any media player

Available with 400 Gigabytes of internal solid state storage to allow more time between content transfers

Save recordings to internal solid state drive, external USB storage, or a defined network storage directory

Stream concurrently at two resolutions and bit rates

Stream at resolutions from 512x288 to 1080p/30

Internal Solid State Storage

HDCP-compliant input and output signal management

HDMI-embedded stereo audio or analog stereo input and output signal support

Audio mixing and DSP functionality

RS‑232, Ethernet, and digital I/O control ports

Supports source resolutions up to 1920x1200, including HDTV 1080p/60

Standards-based H.264 / MPEG‑4 AVC video compression

Provide:

2-Each, Extron SMP 351, 60-1324-01, H.264 Streaming Media Processor, Standard Version – 80 GB SSD. – Or Equal

i. DECDR1-1 & DECDR1-2

Supports live IP video stream decoding — Use with the SME 100 to provide a complete end-to-end streaming solution.

Supports streaming resolutions from 480x320 up to 1080p/60 — Supports a vast array of resolutions to meet varying network conditions, topologies, source and display requirements.

AV media file playback from network shares — Use as a playback device for on-demand playback of network-accessible media files.

Compatible with MP4 and MPEG-2 Transport Stream container formats — Playback common H.264 media player formats from accessible network drives.

Selectable audio output format: HDMI-embedded stereo audio or analog stereo audio — Flexible, cost effective use of display speakers or existing audio systems.

Integrated scaler offers selectable output resolutions from 640x480 to 1920x1200 — Wide range of output resolutions ensure that consistent, reliable image quality is presented on many different types of displays.

Decode at native resolution — The output rate and resolution can be configured to automatically follow the native format of the decoded video stream.

EDID defined scaling — The output rate and resolution can be configured for automatic selection based on EDID communication with the connected display.

Ethernet to RS-232 pass through control — Integration friendly Ethernet to RS-232 pass through for display control.

Fill/Follow/Fit Aspect Ratio Management — Decoded video can fill a display, maintain aspect ratio, or maintain uniformity, presenting imagery that meets customer expectations.

Provide:

2-Each, Extron SMD 101, 60-1305-01, H.264 Streaming Media Decoder. – Or Equal

j. CATVRX1-1 & CATVRX1-2

RF Input: Air/Cable, ‘F’, female, 75 ohm impedance, supports dual Cable and Air tuning with optional RF-AB RF A-B Switch, New digital RF tuning for improved sensitivity

HD Outputs: HDMI and switchable RGB/Component outputs operate simultaneously

HDMI: HDMI receptacle (720p@59.94 Hz, 1080p/1080i/480p@ 29.97 Hz), version 1.3, PCM/AC3 digital audio, HDCP

Audio Outputs: All operate simultaneously, including HDMI audio

Digital Audio: S/PDIF: Coax and TOSlink optical output, Dolby 5.1, PCM, or PCM variable

Stereo Audio: 2 stereo RCA female jacks, variable level

Control Options: RJ-45: 10/100 Ethernet connector, Telnet control and onboard Web page. Supports 2 Telnet sessions, RS-232: DB-9 male, RS-232 data link to control system (protocol is the same for RS-232 or Telnet), 300 to 19,200 baud (9600 default), 8 data bits, no parity, 1 stop bit

Provide:

2-Each, Contemporary Research 232-ATSC 4, Off Air HDTV tuner with RS232 control. – Or Equal

2-Each, Contemporary Research RK1, Single Rack Kit, 1RU. – Or Equal

k. CAM1-1 & CAM1-2

Image Sensor: 1/2.8”, 2.38 Megapixel, Full HD (1080p/60 native) High-speed, Low Noise CMOS Image Sensor

Lens: 30X Optical Zoom

Horizontal FOV 65° Wide end to 2.3° Tele end, f=4.3mm to 129mm, F1.6 to F4.7

Supported Resolutions HD Resolutions: 1080p/60/59.94/50/30/25, 1080i/60/59.94/50, 720p/60/59.94/50/30/25, 16:9 Format

Tri-Synchronous Motion: Concurrent PTZ motor movement and simultaneous PTZ arrival at a stored preset.

Advanced ISP: Vivid and accurate color with extremely fast, razor sharp automatic focus and iris routines.

S/N Ratio > 50 dB

Minimum Illumination 1.4 lux (F1.6, 50IRE), Recommended illumination >100 lux and above (Normal office lighting is 375-500 lux)

Minimum Distance 10mm (wide end) to 1.2m (tele end)

Pan & Tilt Angle/Speed Pan/Tilt Angles: ±160°, Tilt: +90° to -30°

Pan/Tilt Speeds: Both Axes 0.35°/sec to 120°/sec

Sync System Internal

Control Methods Ethernet for Internal Web Pages and Telnet, IR Remote Commander and RS-232 for external controllers

Dimensions/Weight 6.942” (176.3mm) H x 7.056” (179.2 mm) W x 6.757” (171.6mm) D

4.85 lbs. (2.199923 kg)

Provide:

2-Each, Vaddio RoboSHOT 30 QCCU, 999-9917-000W, HD quality PTZ camera, CCU quick connect and wall shelf. – Or Equal

l. CAM2-1 and CAM2-2

Image Device: 1/2.8”, 2.14 Megapixel, Full HD (1080p/60 native) High-speed, Low Noise CMOS Image Sensor

Supported Resolutions HD Resolutions: 1080p/60/59.94/50/30/25, 1080i/60/59.94/50, 720p/60/59.94/50/30/25, Format varies depending on video resolution, USB 2.0 and 3.0 video resolutions/frame rates, all USB resolutions uncompressed

Streaming, IP (H.264, RTSP + USB 3.0 (UVC)

Lens: 10X Optical Zoom, Super Wide 11X Optical Zoom

S/N Ratio > 50 dB

Minimum Illumination Recommended illumination >100 lux

Minimum Distance 10mm (wide end) to 1.0m (tele end)

Pan & Tilt Angle/Speed Pan/Tilt Angles: ±170°, Tilt: +90° to -30°

Pan/Tilt Speeds: Both Axes 90°/sec

Horizontal FOV 67° Wide end (74° degrees in super wide mode) to 7.6° Tele end, f=3.8mm to 41.8mm, F1.8 to F3.4

Control Methods Ethernet for Internal Web Pages and Telnet, IR Remote Commander and RS-232 for external controllers

Gain – Auto or Manual

Backlight Compensation – On or Off

White Balance – Auto, Manual, One-Push

Noise Reduction – On or Off

Aperture/Detail – 16 steps (via all remote management interfaces)

Dimensions/Weight 6.3” (163 mm) H x 6.1” (155 mm) W x 5.5” (145 mm) D

3 lbs. (1.36 kg)

Provide:

1-Each, Vaddio ClearSHOT 10 USB, 999-9990-000W, HD quality PTZ camera, CCU quick connect and wall shelf. – Or Equal

m. DISP4-1 & DISP4-2

2-Each OCFA furnished and installed LCD 55” displays.

n. WCLB1-1

Wireless collaboration gateway with WAP

Integrated dual band wireless access point at 2.4 GHz or 5 GHz

Provides full screen mirroring for Apple iOS devices1

Simultaneous content display from up to four different personal devices

Dedicated mobile app, MirrorOp® for Extron ShareLink™, for reliable iOS and Android content sharing

Collaboration mode allows any attendee to display content and control the presentation

Full-motion video playback from laptops, enables display of media files from a Windows or OS X computer at up to 30 fps for a smooth viewing experience

Security codes ensure content is delivered only to the selected display devices

Displays content directly from a USB flash drive

Full screen or four-window display

Power over Ethernet, or PoE, eliminates the need for a local power supply

Gigabit Ethernet

Three USB ports for peripheral support

HDMI and VGA video outputs

Plenum rated - meets UL 2043 for heat and smoke release, excluding power supply

Front-mounted antennas for easy rack installation

1-Each, Extron ShareLink 250, 60-1508-01 or equal

n. HDMISW1-1

Switches HDMI video and embedded multi-channel digital audio

Inputs: 4 female HDMI type A connectors

Output: 1 female HDMI type-A connector

EDID Minder® automatically manages EDID communication between connected devices

Supports computer video up to 1920x1200, including HDTV 1080p/60 and 2K

Supported HDMI specification features include data rates up to 6.75 Gbps, Deep Color up to 12-bit, 3D, Lip Sync, and HD lossless audio formats

HDCP compliant

Automatic color bit depth management

HDMI to DVI Interface Format Correction

Automatic input cable equalization to 50 feet at 1080p/60 with 8-bit color

Provides +5 VDC, 250 mA power on the output for external peripheral devices

Front panel security lockout

Multiple control options including front panel, RS-232, IR, contact closure, and auto-input switching

1-Each, Extron SW HD 4K, 60-1484-01, - or Equal

2. Audio Equipment

a. DSP1-1 & DSP1-2

12 mic/line level inputs with AEC, 8 mic/line level outputs

Up to 8 channels of configurable USB audio

RS-232 serial port

4-pin GPIO

Provide:

2-Each, Biamp Tesira Forte AVB AI, Digital Signal Processor. – Or Equal

b. DSP2-1 & DSPEXP1-2

Up to 3 I/O cards: EIC-4, EEC-4, EOC-4, and EIOC-4

Up to 12 channels of analog audio

AVB connection to Tesira system for audio networking, configuration and control

Plug-in barrier strip connections on cards

Front panel LEDs for device status indications

Internal universal power supply

Rack mountable (1RU)

CE marked, UL listed, RoHS compliant

Provide:

1-Each, Biamp Tesira EX-MOD, expansion module. – Or Equal

4-Each, Biamp EIC-4, 4 microphone/line level input card. – Or Equal

c. AVBNETSWT1-1

AVB Network Switch

AVB ports: 5

Ethernet ports: 1, (Note: the five AVB ports can also be used for Ethernet)

Operational bandwidth: 10 / 100 / 1 Gigabit

Front panel: 12 x activity LED

Power: 8-18V DC • 0.5A • tip positive

Dimensions: Length: 5 ½ in / 14 cm, Width: 3 ⅝ in / 9.2 cm, Height: 1 ⅛ in / 2.7 cm

Provide:

1-Each, MOTU 9305, 5 Port AVB Ethernet Switch – Or Equal

d. WMRX1-1 & WMRX1-2

RF Carrier Frequency Range 470–937.5 MHz, varies by region

Image Rejection >70 dB, typical

Latency <2.9 ms

RF Sensitivity -97 dBm at 10-5 BER

Working Range 100 m (328 ft.) line-of-sight Note: Actual range depends on

RF signal absorption, reflection and interference.

Audio Frequency Range 20 Hz to 20 kHz Note: Dependent on microphone type.

Audio Dynamic Range >120 dB, A-weighted, typical (System Gain @ +10)

Total Harmonic Distortion <0.1%, (−12 dBFS input, System Gain @ +10)

Provide:

2-Each, Shure QLXD24/B58, Digital Wireless Microphone System with Hand Held Mic Transmitter. – Or Equal

e. WMRX2-1 & WMRX2-2

RF Carrier Frequency Range 470–937.5 MHz, varies by region

Image Rejection >70 dB, typical

Latency <2.9 ms

RF Sensitivity -97 dBm at 10-5 BER

Working Range 100 m (328 ft.) line-of-sight Note: Actual range depends on

RF signal absorption, reflection and interference.

Audio Frequency Range 20 Hz to 20 kHz Note: Dependent on microphone type.

Audio Dynamic Range >120 dB, A-weighted, typical (System Gain @ +10)

Total Harmonic Distortion <0.1%, (−12 dBFS input, System Gain @ +10)

Provide:

2-Each, Shure QLXD14/83, Digital Wireless Microphone System with Belt pack transmitter and lapel microphone. – Or Equal

f. CMIC1-1 to CMIC1-8

Provide:

Microflex ceiling microphone, cardioid pick-up, pre-amp, mounting plate, white,

8-Each, Shure MX22WP/C or equal

g. AMP1-1 & AMP1-2

2-Each, QSC Audio, CX302V Power Amplifier. (OFE)

h. SPKR1-1 to SPKR1-x

x-Each, Tannoy Ceiling Speakers. (OFE)

i. AVB Network Switch

AVB ports: 5

Ethernet ports: 1, (Note: the five AVB ports can also be used for Ethernet)

Operational bandwidth: 10 / 100 / 1 Gigabit

Front panel: 12 x activity LED

Power: 8-18V DC • 0.5A • tip positive

Dimensions: Length: 5 ½ in / 14 cm, Width: 3 ⅝ in / 9.2 cm, Height: 1 ⅛ in / 2.7 cm

Provide:

1-Each, MOTU 9305, 5 Port AVB Ethernet Switch – Or Equal

3. ALS System – Existing System

a. ALSTX1-1 & ALSTX1-2

2-Each, Sennheiser SZI1015-W, IR Assistive Listening System Radiator Panel. (OFE)

2-Each, Sennheiser SI 1015, Wideband Modulator. (OFE)

Provide:

2-Each, Sennheiser EZT3011, Induction loops. (NEW)

2-Each, Sennheiser EKI830, IR receiver. (NEW)

4. Control System

a. CNTR1-1 & CNTL1-2

Memory: SDRAM 512 MB, Flash 4.5 GB

Software and control options: Software Extron Global Configurator® Plus and Professional for Windows®

Ethernet control: Network interface controllers (NICs) 1, Connector 1 female RJ-45 connector, Data rate: 0/100/1000Base-T, half/full duplex with autodetect.

Protocols: DHCP, DNS, HTTP, HTTPS, ICMP, NTP, SFTP, SMTP, SNMP, SSH, TCP/IP, UDP/IP

Default settings: Link speed and duplex level = autodetected

Serial control: 2 bidirectional RS-232, RS-422, RS-485 (ports 7 and 8), 6 bidirectional RS-232 (ports 1 through 6), (2) 3.5 mm captive screw connectors, 5 pole, (6) 3.5 mm captive screw connectors, 3 pole

Baud rate and protocol: 300 to 115200 baud (9600 baud = default); 8 (default) or 7 data bits; 1 (default) or 2 stop bits; no parity (default), even, odd, mark, or space parity

Flex I/O control: 4 analog input or digital input/output (configurable), (1) 3.5 mm captive screw connector, 5 pole

Digital inputs: Input voltage range 0 to 24 VDC, clamped at +30 VDC, Input impedance 29k ohms, Programmable pullup 1k ohms to +5 VDC

Baud rate and protocol (RS-232) 300 to 115200 baud (9600 baud = default); 8 (default) or 7 data bits; 1 (default) or 2 stop bits; no parity (default), even, odd, mark, or space parity

Relay control: 8 normally open relays, Relay control connectors, (4) 3.5 mm captive screw connectors, 4 pole, Relay control contact rating 24 VDC, 1 A

eBUS control: eBUS control ports (1) 3.5 mm captive screw connector, 5 pole (uses 4 poles), eBUS pin configuration: +V = +12 VDC; +S = + signal; -S = - signal; G = ground

Provide:

2-Each, Extron, IPCP 550, 60-1418-01, IP Link Pro Controller. – Or Equal

3-Each, Extron RSU 129, 60-190-01, Universal Rack Shelf Kit. – Or Equal

b. TP2-1 and TP2-2

Screen type: Active matrix TFT color display

Size: 12.1" (30.7 cm), measured diagonally

Resolution: 1280x800

Dot/pixel pitch: 125 dpi

Aspect ratio: Widescreen

Color depth: 24-bit, 16.7 million colors

Transparency: 8 bit alpha channel

Brightness: 360 nits (cd/m2)

Contrast: 950:1

Backlight: LED

Viewing angle: ±88° horizontal, ±88° vertical

Touch screen: Capacitive

Memory: SDRAM 512 MB, Flash 512 MB

2-Each, Extron TLP Pro 1220TG, 60-1341-02, 12" Tabletop TouchLink Pro Touch panel. – Or Equal

c. POE1-1 & POE1-2

Provide:

2-Each, Extron, XTP PI 140, 60-1363-01 Power injector. – Or Equal

d. NETSWT2-1 & NETSWT2-2

Provide:

2-Each, Cisco SG300-20, SRW2016-K9-NA, 20-Port Gigabit Ethernet Switch. – Or Equal

5. Racks and Misc.

a. RACKs, Existing OCFA furnished

b. Power Strips/conditioners

Maximum Output Current: 20 amps

Line Cord: Captive 3/12 AWG, 10 ft. black cord with NEMA 20 plug

Pull-out Lights: Two multi-LED, dimmable lamps

BNC Socket w/Switch: Rear rack lamp, 12VAC 500MA max (lamp not included)

Operating Voltage: 90 to 139 VAC

Spike Protection Mode: Line to neutral, zero ground leakage

Spike Clamping Voltage: 188 VAC peak @ 3,000 Amps

Response Time: 1 nanosecond

Maximum Surge Current: 6,500 Amps

Noise Attenuation: 10 dB @ 10 kHz, 40 dB @ 100 kHz, 50 dB @ 500 kHz

Dimensions: 19” W x 10.5” D x 1.75” H

Weight: 12 lbs.

Power Consumption: 12 watts

Safety Listing: cTUVus

Provide:

2-Each, Furman, PL-8 PRO-C – Or Equal

c. WKYBDMS1-1 and WKYBDMS1-2

RF Wireless keyboard & optical mouse, 50' range minimum (for OFE PCs)

2-Each, Wireless Computing RF-412 or equal

D. Classrooms D106 & D107

1. Digital Video Equipment

a. PROJ1-1 & PROJ1-2

Filter: Long lasting eco filter (up to 15,000 hours)

Brightness: 4,001 to 6,000 lm

Diagonal Screen Size: 1.02–10.16 m (40–400 inches) (16:10 aspect ratio

Technology: LCD, highly durable optical engine with inorganic LCD panels and polarizers providing up to 10,000 hours of maintenance free service.

Resolution: WUXGA, 1920 x 1200

Lens: Standard or as needed

Provide:

2-Each, Panasonic PT-EZ570UL, 5000 ANSI Lumen, 1920 x 1200 (16:10), 3 LCD, Projector. – Or Equal

2-Each, Panasonic ET-LAE200, projector lamp, spare. – Or Equal

2-Each, Panasonic ET-REF200, projector filter, spare. – Or Equal

2-Each, Chief Mfg. RPMA302, RPA Elite Universal & Custom Ceiling Projector Mounts with Keyed Locking. – Or Equal

b. SCN1-1 & SCN1-2

2-Each, OCFA Furnished Da-Lite Manual Pull-Down Screen.

c. DTPSWT1-1 & DTPSWT1-2

All‑in‑one 8x6 4K matrix switcher, scaler, audio DSP with AEC,

Two DTP inputs and six HDMI inputs

Two HDMI outputs and four independently scaled DTP outputs

4K matrix switching and scaling with selectable seamless transitions and logo keying

Integrated DTP inputs and outputs support transmission of video, control, and audio up to 330 feet (100 meters) over a shielded CATx cable

Vector™ 4K scaling engine

4K matrix switching and scaling with selectable seamless transitions and logo keying

Selectable scaled DTP output rates from 640x480 to 4K

Provide:

2-Each, Extron DTP CrossPoint 86 4K, 60-1382-01, Digital Switcher, Preamp Output, w/o Amplifier and Control Processor, 4K backbone. – Or Equal

d. DTPTX1-1 & DTPTX1-2

Transmits HDMI or analog video, control, and analog audio up to 230 feet (70 meters) over a shielded CATx cable

Inputs: One HDMI, one VGA on 15‑pin HD, two 3.5 mm stereo mini jacks for audio

One HDMI input and one VGA input — The DTP T UWP 232 D allows for switching between HDMI and analog video sources.

Auto‑switching between inputs

Supports computer and video resolutions up to 1920x1200, including 1080p/60 and 2K

Analog stereo audio embedding

Extron XTP DTP 24 shielded twisted pair cable is strongly recommended for optimal performance

Independent analog audio inputs

Supports multiple embedded audio formats

Bidirectional RS‑232 and unidirectional IR pass‑through for AV device control

Remote power capability

Digital conversion of analog input signals

HDCP compliant

Supported HDMI specification features include data rates up to 6.75 Gbps, 3D, and HD lossless audio formats

EDID Minder

Supports EDID and HDCP transmission

RS-232 control

Contact closure control port

Mounts in an included two-gang Decora®‑style wall plate

Provide:

2-Each, Extron DTP T UWP 232 D, 60-1366-13, DTP Transmitter, HDMI, VGA, WP Decora, White. – Or Equal

e. DTPRX1-1 to DTPRX1-8

Receives HDMI plus control and analog audio up to 230 feet (70 meters) over a shielded CATx cable — The DTP HDMI 4K 230 Rx provides high reliability and maximum performance on an economical and easily installed cable infrastructure.

Outputs: One HDMI, stereo audio on captive screw

Supports computer and video resolutions up to 4K

Extron XTP DTP 24 shielded twisted pair cable is strongly recommended for optimal performance

Supports multiple embedded audio formats

Supported HDMI specification features include data rates up to 10.2 Gbps, Deep Color up to 12-bit, 3D, HD lossless audio formats, and CEC pass-through

HDCP 2.2 compliant

Supports EDID and HDCP transmission.

Bidirectional RS-232 and IR for AV device control.

Remote power capability

Provide:

8-Each, Extron DTP HDMI 4K 230 Rx, 60-1271-13, DTP HDMI Receiver. – Or Equal

f. BD1-1 & BD1-2

Digital media player (Blu-ray Disc, DVD, CD, USB device [mass storage class]) AVCHD playback format

Supported Disc Formats: Blu-ray Disc: BD25, BD50, BD-ROM, BD-R, BD-RE

DVD: DVD, DVD+R, DVD-R, DVD+RW, DVD-RW

CD: CD, CD-R, CD-RW, DTS Music Disc (DTS Audio CD, 5.1 Music Disc), HDCD, Super Video CD (SVCD), Video CD (VCD)

Video Resolutions: Auto, 480i/576i, 480p/576p, 720p, 1080i, 1080p

Aspect Ratios: 16:9 Full, 16:9 Normal, 4:3 Pan & Scan, 4:3 Letterbox

System NTSC, PAL, Multi (if supported by TV)

HDMI Color Space: RGB PC Level, RGB Video Level, YCbCr (4:4:4), YCbCr 4:2:2

Output: HDMI > v1.4 (3D), HDCP 1.4

Decoding: Video: DivX 3, 4, 5, 6; DivX HD; MPEG-1; MPEG-2; MPEG-4; MPEG-4 AVC (H.264); VC-1 (Windows Media Video); Xvid

Audio: AAC; Dolby Digital; Dolby Digital Plus; Dolby TrueHD; DTS Digital Surround; DTS-HD; WMA

Serial Remote Connector: 9-pin D-Sub female, RS-232C, Mode: Full duplex, Baud Rate: 9600 or 38400 bps (selectable)

Ethernet Connector: LAN port, Standards: Ethernet (10 Mbps), Fast Ethernet (100 Mbps)

Provide:

2-Each, Denon DN-500BD, Blu-Ray Disk Player. – Or Equal

g. STRMENDCR1-1 & STRMENDCR 1-2

Process two high resolution AV signals from up to five available inputs

Stream and record simultaneously

High quality scaling with flexible two-window management

Produces MP4 media files that are compatible with virtually any media player

Available with 400 Gigabytes of internal solid state storage to allow more time between content transfers

Save recordings to internal solid state drive, external USB storage, or a defined network storage directory

Stream concurrently at two resolutions and bit rates

Stream at resolutions from 512x288 to 1080p/30

Internal Solid State Storage

HDCP-compliant input and output signal management

HDMI-embedded stereo audio or analog stereo input and output signal support

Audio mixing and DSP functionality

RS‑232, Ethernet, and digital I/O control ports

Supports source resolutions up to 1920x1200, including HDTV 1080p/60

Standards-based H.264 / MPEG‑4 AVC video compression

Provide:

2-Each, Extron SMP 351, 60-1324-01, H.264 Streaming Media Processor, Standard Version – 80 GB SSD. – Or Equal

h. STRMDCR1-1 & STRMDCR 1-2

Supports live IP video stream decoding — Use with the SME 100 to provide a complete end-to-end streaming solution.

Supports streaming resolutions from 480x320 up to 1080p/60 — Supports a vast array of resolutions to meet varying network conditions, topologies, source and display requirements.

AV media file playback from network shares — Use as a playback device for on-demand playback of network-accessible media files.

Compatible with MP4 and MPEG-2 Transport Stream container formats — Playback common H.264 media player formats from accessible network drives.

Selectable audio output format: HDMI-embedded stereo audio or analog stereo audio — Flexible, cost effective use of display speakers or existing audio systems.

Integrated scaler offers selectable output resolutions from 640x480 to 1920x1200 — Wide range of output resolutions ensure that consistent, reliable image quality is presented on many different types of displays.

Decode at native resolution — The output rate and resolution can be configured to automatically follow the native format of the decoded video stream.

EDID defined scaling — The output rate and resolution can be configured for automatic selection based on EDID communication with the connected display.

Ethernet to RS-232 pass through control — Integration friendly Ethernet to RS-232 pass through for display control.

Fill/Follow/Fit Aspect Ratio Management — Decoded video can fill a display, maintain aspect ratio, or maintain uniformity, presenting imagery that meets customer expectations.

Provide:

2-Each, Extron SMD 101, 60-1305-01, H.264 Streaming Media Decoder.

i. WCLB1-1

Wireless collaboration gateway with WAP

Integrated dual band wireless access point at 2.4 GHz or 5 GHz

Provides full screen mirroring for Apple iOS devices1

Simultaneous content display from up to four different personal devices

Dedicated mobile app, MirrorOp® for Extron ShareLink™, for reliable iOS and Android content sharing

Collaboration mode allows any attendee to display content and control the presentation

Full-motion video playback from laptops, enables display of media files from a Windows or OS X computer at up to 30 fps for a smooth viewing experience

Security codes ensure content is delivered only to the selected display devices

Displays content directly from a USB flash drive

Full screen or four-window display

Power over Ethernet, or PoE, eliminates the need for a local power supply

Gigabit Ethernet

Three USB ports for peripheral support

HDMI and VGA video outputs

Plenum rated - meets UL 2043 for heat and smoke release, excluding power supply

Front-mounted antennas for easy rack installation

1-Each, Extron ShareLink 250, 60-1508-01 or equal

j. CATVRX1-1 & CATVRX1-2

RF Input: Air/Cable, ‘F’, female, 75 ohm impedance, supports dual Cable and Air tuning with optional RF-AB RF A-B Switch, New digital RF tuning for improved sensitivity

HD Outputs: HDMI and switchable RGB/Component outputs operate simultaneously

HDMI: HDMI receptacle (720p@59.94 Hz, 1080p/1080i/480p@ 29.97 Hz), version 1.3, PCM/AC3 digital audio, HDCP

Audio Outputs: All operate simultaneously, including HDMI audio

Digital Audio: S/PDIF: Coax and TOSlink optical output, Dolby 5.1, PCM, or PCM variable

Stereo Audio: 2 stereo RCA female jacks, variable level

Control Options: RJ-45: 10/100 Ethernet connector, Telnet control and onboard Web page. Supports 2 Telnet sessions, RS-232: DB-9 male, RS-232 data link to control system (protocol is the same for RS-232 or Telnet), 300 to 19,200 baud (9600 default), 8 data bits, no parity, 1 stop bit

Provide:

2-Each, Contemporary Research 232-ATSC 4, Off Air HDTV tuner with RS232 control. – Or Equal

2-Each, Contemporary Research RK1, Single Rack Kit, 1RU. – Or Equal

k. CAM1-1 & CAM1-2

Image Sensor: 1/2.8”, 2.38 Megapixel, Full HD (1080p/60 native) High-speed, Low Noise CMOS Image Sensor

Lens: 30X Optical Zoom

Horizontal FOV 65° Wide end to 2.3° Tele end, f=4.3mm to 129mm, F1.6 to F4.7

Supported Resolutions HD Resolutions: 1080p/60/59.94/50/30/25, 1080i/60/59.94/50, 720p/60/59.94/50/30/25, 16:9 Format

Tri-Synchronous Motion: Concurrent PTZ motor movement and simultaneous PTZ arrival at a stored preset.

Advanced ISP: Vivid and accurate color with extremely fast, razor sharp automatic focus and iris routines.

S/N Ratio > 50 dB

Minimum Illumination 1.4 lux (F1.6, 50IRE), Recommended illumination >100 lux and above (Normal office lighting is 375-500 lux)

Minimum Distance 10mm (wide end) to 1.2m (tele end)

Pan & Tilt Angle/Speed Pan/Tilt Angles: ±160°, Tilt: +90° to -30°

Pan/Tilt Speeds: Both Axes 0.35°/sec to 120°/sec

Sync System Internal

Control Methods Ethernet for Internal Web Pages and Telnet, IR Remote Commander and RS-232 for external controllers

Dimensions/Weight 6.942” (176.3mm) H x 7.056” (179.2 mm) W x 6.757” (171.6mm) D

4.85 lbs. (2.199923 kg)

Provide:

2-Each, Vaddio RoboSHOT 30 QCCU, 999-9917-000W, HD quality PTZ camera, CCU quick connect and wall shelf. – Or Equal

l. CAM2-1 and CAM2-2

Image Device: 1/2.8”, 2.14 Megapixel, Full HD (1080p/60 native) High-speed, Low Noise CMOS Image Sensor

Supported Resolutions HD Resolutions: 1080p/60/59.94/50/30/25, 1080i/60/59.94/50, 720p/60/59.94/50/30/25, Format varies depending on video resolution, USB 2.0 and 3.0 video resolutions/frame rates, all USB resolutions uncompressed

Streaming, IP (H.264, RTSP + USB 3.0 (UVC)

Lens: 10X Optical Zoom, Super Wide 11X Optical Zoom

S/N Ratio > 50 dB

Minimum Illumination Recommended illumination >100 lux

Minimum Distance 10mm (wide end) to 1.0m (tele end)

Pan & Tilt Angle/Speed Pan/Tilt Angles: ±170°, Tilt: +90° to -30°

Pan/Tilt Speeds: Both Axes 90°/sec

Horizontal FOV 67° Wide end (74° degrees in super wide mode) to 7.6° Tele end, f=3.8mm to 41.8mm, F1.8 to F3.4

Control Methods Ethernet for Internal Web Pages and Telnet, IR Remote Commander and RS-232 for external controllers

Gain – Auto or Manual

Backlight Compensation – On or Off

White Balance – Auto, Manual, One-Push

Noise Reduction – On or Off

Aperture/Detail – 16 steps (via all remote management interfaces)

Dimensions/Weight 6.3” (163 mm) H x 6.1” (155 mm) W x 5.5” (145 mm) D

3 lbs. (1.36 kg)

Provide:

1-Each, Vaddio ClearSHOT 10 USB, 999-9990-000W, HD quality PTZ camera, CCU quick connect and wall shelf. – Or Equal

m. DISP4-1 & DISP4-2

2-Each OCFA furnished and installed LCD 55” displays.

n. WCLB1-1 and WCLB1-2

Wireless collaboration gateway with WAP

Integrated dual band wireless access point at 2.4 GHz or 5 GHz

Provides full screen mirroring for Apple iOS devices1

Simultaneous content display from up to four different personal devices

Dedicated mobile app, MirrorOp® for Extron ShareLink™, for reliable iOS and Android content sharing

Collaboration mode allows any attendee to display content and control the presentation

Full-motion video playback from laptops, enables display of media files from a Windows or OS X computer at up to 30 fps for a smooth viewing experience

Security codes ensure content is delivered only to the selected display devices

Displays content directly from a USB flash drive

Full screen or four-window display

Power over Ethernet, or PoE, eliminates the need for a local power supply

Gigabit Ethernet

Three USB ports for peripheral support

HDMI and VGA video outputs

Plenum rated - meets UL 2043 for heat and smoke release, excluding power supply

Front-mounted antennas for easy rack installation

1-Each, Extron ShareLink 250, 60-1508-01 or equal

o. HDMISW1-1 and HDMISW1-2

Switches HDMI video and embedded multi-channel digital audio

Inputs: 4 female HDMI type A connectors

Output: 1 female HDMI type-A connector

EDID Minder® automatically manages EDID communication between connected devices

Supports computer video up to 1920x1200, including HDTV 1080p/60 and 2K

Supported HDMI specification features include data rates up to 6.75 Gbps, Deep Color up to 12-bit, 3D, Lip Sync, and HD lossless audio formats

HDCP compliant

Automatic color bit depth management

HDMI to DVI Interface Format Correction

Automatic input cable equalization to 50 feet at 1080p/60 with 8-bit color

Provides +5 VDC, 250 mA power on the output for external peripheral devices

Front panel security lockout

Multiple control options including front panel, RS-232, IR, contact closure, and auto-input switching

1-Each, Extron SW HD 4K, 60-1484-01, - or Equal

2. Audio Equipment

a. DSP1-1 & DSP1-2

12 mic/line level inputs with AEC, 8 mic/line level outputs

Up to 8 channels of configurable USB audio

RS-232 serial port

4-pin GPIO

SIP VoIP interface via a RJ-45 connector

Provide:

2-Each, Biamp Tesira Forte AVB AI, Digital Signal Processor. – Or Equal

b. WMRX1-1 & WMRX1-2

RF Carrier Frequency Range 470–937.5 MHz, varies by region

Image Rejection >70 dB, typical

Latency <2.9 ms

RF Sensitivity -97 dBm at 10-5 BER

Working Range 100 m (328 ft.) line-of-sight Note: Actual range depends on

RF signal absorption, reflection and interference.

Audio Frequency Range 20 Hz to 20 kHz Note: Dependent on microphone type.

Audio Dynamic Range >120 dB, A-weighted, typical (System Gain @ +10)

Total Harmonic Distortion <0.1%, (−12 dBFS input, System Gain @ +10)

Provide:

2-Each, Shure QLXD24/B58, Digital Wireless Microphone System with Hand Held Mic Transmitter. – Or Equal

c. WMRX2-1 & WMRX2-2

RF Carrier Frequency Range 470–937.5 MHz, varies by region

Image Rejection >70 dB, typical

Latency <2.9 ms

RF Sensitivity -97 dBm at 10-5 BER

Working Range 100 m (328 ft.) line-of-sight Note: Actual range depends on

RF signal absorption, reflection and interference.

Audio Frequency Range 20 Hz to 20 kHz Note: Dependent on microphone type.

Audio Dynamic Range >120 dB, A-weighted, typical (System Gain @ +10)

Total Harmonic Distortion <0.1%, (−12 dBFS input, System Gain @ +10)

Provide:

2-Each, Shure QLXD14/83, Digital Wireless Microphone System with Belt pack transmitter and lapel microphone. – Or Equal

d. CMIC1-1 to CMIC1-8

Provide:

Microflex ceiling microphone, cardioid pick-up, pre-amp, mounting plate, white,

8-Each, Shure MX22WP/C or equal

e. AMP1-1 & AMP1-2

1-Each, QSC Audio, CX302V Power Amplifier. (OFE)

f. SPKR3-1 to SPKR3-2

2-Each, Tannoy wall Speakers. (OFE)

3. ALS System – New System, should be compatible with existing ALS systems

a. ALSTX1-1 & ALSTX1-2

Provide:

2-Each, Sennheiser SZI1015-W, IR Assistive Listening System Radiator Panel 95KHz. – Or Equal

2-Each, Sennheiser SI 1015, Wideband Modulator 95KHz. – Or Equal

2-Each, Sennheiser EZT3011, Induction loops. – Or Equal

4-Each, Sennheiser EKI830, IR receiver. – Or Equal

2-Each, Sennheiser EP01-100, single earphone. – Or Equal

4. Control System

a. CNTR1-1 & CNTL1-2

Memory: SDRAM 512 MB, Flash 4.5 GB

Software and control options: Software Extron Global Configurator® Plus and Professional for Windows®

Ethernet control: Network interface controllers (NICs) 1, Connector 1 female RJ-45 connector, Data rate: 0/100/1000Base-T, half/full duplex with autodetect.

Protocols: DHCP, DNS, HTTP, HTTPS, ICMP, NTP, SFTP, SMTP, SNMP, SSH, TCP/IP, UDP/IP

Default settings: Link speed and duplex level = autodetected

Serial control: 2 bidirectional RS-232, RS-422, RS-485 (ports 7 and 8), 6 bidirectional RS-232 (ports 1 through 6), (2) 3.5 mm captive screw connectors, 5 pole, (6) 3.5 mm captive screw connectors, 3 pole

Baud rate and protocol: 300 to 115200 baud (9600 baud = default); 8 (default) or 7 data bits; 1 (default) or 2 stop bits; no parity (default), even, odd, mark, or space parity

Flex I/O control: 4 analog input or digital input/output (configurable), (1) 3.5 mm captive screw connector, 5 pole

Digital inputs: Input voltage range 0 to 24 VDC, clamped at +30 VDC, Input impedance 29k ohms, Programmable pullup 1k ohms to +5 VDC

Baud rate and protocol (RS-232) 300 to 115200 baud (9600 baud = default); 8 (default) or 7 data bits; 1 (default) or 2 stop bits; no parity (default), even, odd, mark, or space parity

Relay control: 8 normally open relays, Relay control connectors, (4) 3.5 mm captive screw connectors, 4 pole, Relay control contact rating 24 VDC, 1 A

eBUS control: eBUS control ports (1) 3.5 mm captive screw connector, 5 pole (uses 4 poles), eBUS pin configuration: +V = +12 VDC; +S = + signal; -S = - signal; G = ground

Provide:

1-Each, Extron, IPCP 550, 60-1418-01, IP Link Pro Controller. – Or Equal

1-Each, Extron RSU 129, 60-190-01, Universal Rack Shelf Kit. – Or Equal

b. TP2-1 and TP2-2

Screen type: Active matrix TFT color display

Size: 12.1" (30.7 cm), measured diagonally

Resolution: 1280x800

Dot/pixel pitch: 125 dpi

Aspect ratio: Widescreen

Color depth: 24-bit, 16.7 million colors

Transparency: 8 bit alpha channel

Brightness: 360 nits (cd/m2)

Contrast: 950:1

Backlight: LED

Viewing angle: ±88° horizontal, ±88° vertical

Touch screen: Capacitive

Memory: SDRAM 512 MB, Flash 512 MB

2-Each, Extron TLP Pro 1220TG, 60-1341-02, 12" Tabletop TouchLink Pro Touch panel. – Or Equal

c. POE1-1 & POE1-2

Provide:

2-Each, Extron, XTP PI 140, 60-1363-01 Power injector. – Or Equal

d. NETSWT2-1 & NETSWT2-2

Provide:

1-Each, Cisco SG300-20, SRW2016-K9-NA, 20-Port Gigabit Ethernet Switch. – Or Equal

5. Racks and Misc.

a. RACKs, Existing OCFA furnished

b. Power Strips/conditioners

Maximum Output Current: 20 amps

Line Cord: Captive 3/12 AWG, 10 ft. black cord with NEMA 20 plug

Pull-out Lights: Two multi-LED, dimmable lamps

BNC Socket w/Switch: Rear rack lamp, 12VAC 500MA max (lamp not included)

Operating Voltage: 90 to 139 VAC

Spike Protection Mode: Line to neutral, zero ground leakage

Spike Clamping Voltage: 188 VAC peak @ 3,000 Amps

Response Time: 1 nanosecond

Maximum Surge Current: 6,500 Amps

Noise Attenuation: 10 dB @ 10 kHz, 40 dB @ 100 kHz, 50 dB @ 500 kHz

Dimensions: 19” W x 10.5” D x 1.75” H

Weight: 12 lbs.

Power Consumption: 12 watts

Safety Listing: cTUVus

Provide:

2-Each, Furman, PL-8 PRO-C – Or Equal

c. WKYBDMS1-1 and WKYBDMS1-2

RF Wireless keyboard & optical mouse, 50' range minimum (for OFE PCs)

2-Each, Wireless Computing RF-412 or equal

J. ADA-COMPLIANT ASSISTIVE LISTENING SYSTEM:

A complete system shall be furnished and installed to meet the latest ADA 2010 requirements for hard-of-hearing for each system. Furnish portable receivers in as indicated in the table below. The Stationary Assistive Listening System shall be integrated into and work in conjunction with the sound reinforcement systems. Mount the necessary stationary transmitters into the equipment racks or a wall cabinet and adjust as required for total coverage of seating areas Assistive Listening Transmitters shall operate in the IR.

ADA Table 219.3 Receivers for Assistive Listening Systems

Capacity of Seating in Assembly Area	Minimum Number of Required Receivers	Minimum Number or Required Receivers Required to be Hearing Aid Compatible
50 or less	2	2
51 to 200	2, plus 1 per 25 seats over 50 seats[1]	2

201 to 500	2, plus 1 per 25 seats over 50 seats[1]	1 per 4 receivers[1]
501 to 1000	20, plus 1 per 33 seats over 500 seats[1]	1 per 4 receivers[1]
1001 to 2000	35, plus 1 per 50 seats over 1000 seats[1]	1 per 4 receivers[1]
2001 and over	55, plus 1 per 100 seats over 2000 seats[1]	1 per 4 receivers[1]

Note: 1. or fraction thereof.

2.06 GENERAL PRODUCTS FOR SYSTEMS

CABLE – ALL SPACES

1. Speaker Cable, 70-Volt distribution, Plenum Rated 2-Conductor, 16 AWG, unshielded pair: Extron, West Penn, Belden or equal.
2. Speaker Cable, 8 Ohm distribution, Plenum Rated 2-Conductor, 12 AWG, unshielded pair, Extron, West Penn, Belden, or equal.
3. Analog Microphone/Line Level Installation Cable, 22 AWG conductor, jacketed, shielded, twisted-pair, Plenum Rated: Extron, West Penn, Belden or equal.
4. Pre-Terminated HDMI, DVI Display Port cables: Extron, or equal. (Note, cables must be rated for HDMI 1.3a specifications or better, capable of passing 1080p or 1920 x 1200 resolution at distances less than 35' without an active equalizer.)
5. Digital Video Switcher, CAT-6A, Shielded Twisted Pair Cable with braided shield and drain wire for HDBase-T Systems, Plenum Rated: Extron or to HDBase-T Standard equivalent (Quantity as required). With Extron Shielded RJ-45, or HDBase-T standard connectors. Contractor is responsible for maintaining braided shield and drain wire from plug to plug per HDBase-T standard.
6. Control System Device Control (RS232, Relay or Contact Closure): (Dual 22 AWG shielded twisted pairs with individual drain wires, each pair is color-coded Red/Black and Green/White to simplify identification.) Plenum Rated: Extron, West Penn, Belden or equivalent.
7. Data Network CAT-5E, OCFA standard General Cable, 24AWG 5ENP4P24-BL-P-GCC-PV, plenum rated.
8. Provide plenum rated cable for all cable where required by code. Any cable changes or substitutions must be submitted and approved prior to installation. Non-compliant cable that has been installed without approval will be replaced at the AV Contractor's expense.

PART 3 – EXECUTION

3.01 GENERAL INSTALLATION DESCRIPTION

A. The installation, configuration and wiring of the system shall be executed in accordance with the drawings and the equipment manufacturer's installation instructions and guidelines. Should any variations in these requirements occur, the Contractor shall notify the architect before making any changes. It shall be the responsibility of the factory-authorized installer of the approved equipment to install the equipment and guarantee the system to operate as per plans and specifications.

B. Furnish all Additional conduits, AV Back-boxes, conductors, equipment plugs, terminal strips, etc., and labor to install a complete and operable system.

C. The cables within the rack or cabinets shall be carefully cabled and laced with Velcro wraps. All cables shall be numbered for identification. Cables should have enough slack to allow removal of equipment for service without having to cut multiple Velcro ties or wire wraps. Power plugs need to be labeled at PDU.

D. Splices of conductors in underground pull boxes are not permitted.

E. The labor employed by the Contractor shall be regularly employed in the installation and repair of communication systems and shall be acceptable to the OCFA and architect to engage in the installation and service of this system.

F. The Contractor shall thoroughly clean all equipment and materials. All exposed parts of the equipment, cabinets, and other equipment shall be left in a clean condition, unblemished and free of all dirt, dust, smudges, spots, fingerprints, etc., The Contractor shall remove all debris and rubbish occasioned by the work from the site. The Contractor shall thoroughly clean all buildings of any dirt, debris, rubbish, marks, etc., Caused by the performance of this work.

G. The system must meet all local and other prevailing codes.

H. All cabling installations shall be performed by qualified technicians.

I. All cabling shall be splice free.

J. In order to ensure the least amount of cable un-twisting, it is required that all cables shall be stripped using a special tool.

K. The use of lubricants (i.e. Yellow 77) to facilitate the installation of cables in conduits is highly discouraged. If such a lubricant must be used, the Contractor shall verify the acceptability of the lubricant to be used with the cable manufacturer, prior to using such a lubricant.

L. Under no circumstance are "channel locks" or other pliers to be used.

M. Plenum rated cable may be run exposed above ceilings, provided the cabling is supported independent of other utilities such as conduits, pipes, and the ceiling support systems. The cables shall not be laid directly on the ceiling panels. The use of cable ties shall be done in accordance with the cable manufacturer's requirements. The cable jacket composition must meet local and all other prevailing fire and safety codes.

N. Labeling

1. Wiring Labels: At all connection points for all types of cable & wiring, a label strip shall be attached indicating the name/number of that cable or wire as follows:

    a. At internal locations (inside racks, cabinets, or boxes), a pressure sensitive label shall be used.

    b. At external locations, a printed label covered with clear shrink wrap or approved labeling system shall be used.

2. Equipment Labels: All active components shall have labels at the front and rear. Labels shall be applied plumb and neat and shall not cover any equipment lights, recessed controls, or control labels.

    a. Front labels shall indicate functional use of equipment.

    b. Rear labels shall indicate system schematic reference designation.

O. All firewalls penetrated by Contractor shall be sealed by use a non-permanent fire blanket or other method in compliance with the current edition of National Fire Protection Association (NFPA) and the National Electric Code (NEC) or other prevailing code. The Contractor must not use concrete or other non-removable substance for fire stopping on cable trays, wire ways or conduits. Contractors who use this method will be required to replace all cables affected and provide the original specified access to each effected area.

P. Equipment Rack and Equipment Testing and Adjusting Procedures: Conduct procedures in fabrication shop. Verify safe and proper operation of all components, devices, or equipment, establish nominal signal levels within the systems and verify the absence of extraneous or degrading signals. Make all preliminary adjustments and document the setting of all controls, parameters of all corrective networks, voltages at key system interconnection points, gains and losses, as applicable. Submit test report with color photographs of each equipment rack, front and back. Perform at least the following procedures:

1. Preliminary: Verify:

   a. Grounding of devices and equipment. Integrity of signal and electrical system ground connections.

   b. Proper provision of power to devices and equipment.

   c. Integrity of all insulation, shield terminations and connections.

   d. Integrity of soldered connections. Absence of solder splatter, solder bridges.

   e. Absence of debris of any kind, tools, etc.

   f. Routing and dressing of wire and cable.

   g. All wiring, including polarity and continuity, including conformance with wire designations on running sheets, field and shop drawings.

   h. Mechanical integrity of all support provisions.

2. All new equipment racks shall be bolted to the floor/millwork by the Contractor once the OCFA determines the exact location for new rack. Contractor to verify the original Middle Atlantic racks are bolted to floor and seismic bracing are installed to code. The earthquake mounting brackets for each rack kit shall be screwed to studs, not drywall. All equipment shall be serviceable in the racks final location – the need to unbolt racking equipment to access or service equipment is not acceptable.

Q. Cleaning

1. Clean each section or area of where the work was conducted after completion to permit immediate use of the area. Remove and discard all refuse, rubbish, and debris.

2. The Contractor shall ensure that all recyclable and environmentally-hazardous waste materials are disposed properly.

3. Make good all existing structures, surfaces, and utilities affected by cutting, coring, mounting, drilling, or other new work.

4. Clean all furnished equipment of dust, dirt, finger prints, smudge, and other material prior to calling for a Substantial Performance of Work Review or Completion of Work Review.

3.02 PROTECTION

A. During the installation phase and up to the date of achieving Substantial Performance of Work, protect finished or unfinished work against damage or loss. In the event of such damage or loss, immediately replace or repair such work or equipment at no cost to the OCFA.

3.03 SPECIFIC SYSTEM INSTALLATION REQUIREMENTS

A. The installer shall, upon completion of the system, orient all antennas, speakers, Align all projectors, screens and displays, adjust all controls, etc., to provide a system operating at maximum capability.

B. Submit block diagram and shop drawing of equipment.

3.04 GENERAL TESTING REQUIREMENTS

A. Provide all instruments for testing and demonstrating in the presence of the OCFA's inspector that the all Audio, Digital Video and Control parameters are as stated in the factory data sheets. Check all circuits and wiring to verify they are free of shorts and grounds.

3.05 SPECIFIC AUDIO SYSTEM TESTING REQUIREMENTS

A. Furnish all laptops, software, equipment and personnel to conduct these tests in accordance with the performance specification requirements. ANSI and EIA Standards.

B. Audio Testing and Adjustment:

1. Adjust all audio levels.

C. Provide full flat panel monitor display calibration and adjustments for optimal picture quality for a single HDMI input. Provide proper aspect ratio configuration for both 16:9 and 16:10 sources. Use a test generator (I.E. Extron VTG or equal): for all setup verification, and verify proper image configuration with the all inputs. (Contract the OCFA's Technical Representative prior to final adjustment to coordinate).

D. Controls: Adjust all controls to achieve the specified performance. Provide shaft-locks or covers for all level controls, as appropriate to prevent unauthorized gain changes. Audiovisual Contractor will confirm that all control system operations are properly programmed and repeatable.

E. Testing Report: Provide a letter/report documenting the results of these preliminary tests, including amplifier gain/level settings, crossover filter settings, and AVS equalization curves for review by the AV Design Consultant.

3.06 ACCEPTANCE TESTS

A. Qualification for Acceptance: Subsequent to completing preliminary testing, the Audiovisual Contractor shall furnish the OFCA Project Manager with the letter/report documenting the results of the preliminary tests and two (2) copies of "as-built" wiring diagrams of the entire system including the connection numbers, and their locations. The receipt of this documentation will constitute the Audiovisual Contractor's acknowledgment that the installation is complete and conforms to this specification, and is ready to be reviewed and tested by the AV Design Consultant.

B. Acceptance Test: The Consultant, OCFA's Representative and/or Project Manager shall be present during the acceptance testing and require the assistance and cooperation of the Contractor. Provide personnel who participated in the actual installation and preliminary testing and adjustment of the Audiovisual Systems.

1. Equipment cabinet keys and any tamper-proof fastener tools must be available to the AV Design Consultant. Delays associated with failure to access the equipment will be back-charged to the Contractor at the Audiovisual Systems Design Consultant's current hourly rates.

2. Each major component shall be demonstrated to function, as specified.

3. The Contractor shall provide a laptop with all manufacturer supplied configuration software necessary for communicating with DSP Audio Matrix Mixers, and the Modular Audiovisual Switchers. A review of system settings may be required for either of the programmable units at OCFA and the Audiovisual Systems Design Consultant's request, and settings may be adjusted if necessary.

C. Such tests may be performed on any piece of equipment or system. If any test shows the equipment or system is defective or does not comply with the specifications, the Contractor shall perform any remedies at his expense and pay the subsequent expenses of any retesting required.

D. Delays: If the acceptance of the system is delayed because it does not meet the specification requirements, the Contractor shall reimburse the OCFA for all expenses of consultants retained to represent the OCFA during the final acceptance testing. This will include costs associated with travel to the site, and include reimbursable business travel expenses.

3.07 SYSTEM DOCUMENTATION, TRAINING, AND FIELD SUPPORT

A. Operation and Maintenance Manuals: For each system, provide three (3) copies of system manuals per system, two (2) for the OCFA and one (1) for the Audiovisual Systems Design Consultant. Manuals shall be in adequately sized three-ring binders, clearly labeled on spine. Manuals shall contain the following:

1. Service Reference Cover Sheet: Provide a cover sheet with Contractor name, address, Email, WEB Address, telephone and Fax numbers.

2. System Operation Instructions: Step-by-step operating instructions for the basic day-to-day use of the system including power activation, connection of source devices, adjustment of volume levels, selection of sources, etc. Include illustrations and references to individual equipment manuals.

3. Equipment Manuals: Include copies of individual equipment operation manuals separated by tabbed dividers. Order THE manuals in nominal signal path order (i.e. sources first, amplifiers/loudspeakers last), followed by control system manuals, followed by miscellaneous manuals.

4. Equipment List: List all system equipment including, connectors and specialty hardware, by manufacturer and model and serial number.

   a. As-built Drawings: Provide one set, reduced 11”x17” foldout "as built" functional diagrams in clear plastic binder sleeves. Fold and insert drawings so that drawing title is clearly visible at the front of the sleeve. In addition, provide 2 full-size drawing sets.

   b. Provide software programmable device configuration files to the OCFA for all control system interfaces and computer-based files, and the DSP Audio Matrix Mixer. Store files on site in the system documentation binders in disk sleeves. Provide the files on CD-ROM.

5. Training: Provide hours as needed of system training to operator(s) designated by the OCFA. Training time is to be non-contiguous, in multiple separate sessions. Training sessions are to be digitally recorded upon OCFA request.

3.08 MISCELLANEOUS PROJECT REQUIREMENTS

A. Plan meetings and schedule Within thirty (30) calendar days after the date of award of the Contract, an initial planning meeting will be held with the successful bidder to clarify all requirements (systems, services, distribution methods, etc.), identify responsibilities, and schedule the events that will transpire during the implementation of the project. Within one (1) week of this initial meeting, the Contractor shall provide a written report and project schedule to clearly document the events and responsibilities associated with the project.

B. Site Cleaning: Throughout the progress of the plant construction, the Contractor shall keep the working area free from debris of all types and remove from the premises all rubbish resulting from any work done by Contractor. On a daily basis and at the completion of its work, the Contractor shall, to the extent possible, leave the premises in a clean and finished condition.

C. Safety Requirements: Contractor will utilize appropriate personnel and display warning signs, signals, flags and/or barricades at the work site to ensure adherence to safety regulations and as prudence requires.

D. Specification/Drawing Status: All specifications and drawings related to this project will be "frozen" after shop drawing approval. The OCFA reserves the right to negotiate any future changes with the Contractor at any time.

E. Upon approval of shop drawings, Contractor shall immediately place orders for all required materials, components, and supplies. In addition, Contractor shall secure and forward written confirmations (including orders and shipping dates) direct from each manufacturer/vendor to the OCFA's Project Manager.

F. Contractor shall expedite shipment of all materials, components and supplies, as necessary to ensure the successful completion of the Project by the date required. All costs for expediting shall be included within Contractor's pricing as provided below.

G. The system cost herein shall include administration/maintenance training for at least ten OCFA's representatives with a minimum allotment of sixteen (16) hours. All training shall include written and/or video materials that shall remain the property of OCFA. If materials are written, they shall be provided in quantities sufficient for each person trained; if materials are video, one copy of each will be required. The administration/maintenance training shall include, but not be limited to, the following:

1. Review of as-built documentation, including a site demonstration.

2. All warranty information.

3.09 DAMAGES

A. The Contractor will be held responsible for any and all damages to portions of the building caused by it, its employees or sub-contractors; including but not limited to:

1. Damage to any portion of the building caused by the movement of tools, materials or equipment.

2. Damage to any component of the construction of spaces.

3. Damage to the electrical distribution system.

4. Damage to the electrical, mechanical and/or life safety or other systems caused by inappropriate operation or connections made by the Contractor or other actions of Contractor.

5. Damage to the materials, tools and / or equipment of the OCFA, its consultants, agents and tenants.

3.10 INSPECTIONS

A. On-going inspections shall be performed during construction by the OCFA's Project Manager. All work shall be performed in a high quality manner and the overall appearance shall be clean, neat and orderly. The following points will be examined and must be satisfactorily complied with:

1. Are all cables properly labeled, from end-to-end?

2. Have all terminated cables been properly tested in accordance with the specifications for the specific category as well as tested for opens, shorts, polarity reversals, transposition and presence of AC and/or DC voltage?

3. Have the pathway guidelines been followed? Are all cable penetrations installed properly and fire stopped according to code?

4. Has the Contractor avoided excessive cable bending?

5. Is Cable fill correct?

6. Are terminations compatible with applications equipment?

7. Are connectors properly turned right side up in the Jack Panels or faceplates without cables wrapped or twisted?

8. Is the jacket maintained right up to the termination?

9. Are identification markings uniform, permanent and readable?

3.11 COMPLETION OF WORK

A. At the completion of the System, the Contractor shall restore to its former condition, all aspects of the project site and on a daily basis, shall remove all waste and excess materials, rubbish debris, tools and equipment resulting from or used in the services provided under this Contract. All clean up, restoration, and removal noted above will be by the Contractor and at no cost to OCFA. If the Contractor fails in its duties under this paragraph, OCFA may upon notice to the Contractor perform the necessary clean up and deduct the costs thereof from any amounts due or to become due to the Contractor. It shall be the Contractor's responsibility to remove trash from the areas it is working in and bring trash and debris to the Contractor provided dumpster.

B. Final Punch Walk: The Contractor and OCFA shall complete a final inspection to determinate if all conditions of the scope of work are completed to the OCFA's satisfaction. A "punch list" will be formulated within (2) days of the punch walk and be presented to the Contractor for completion prior to final project sign-off by the OCFA. If an item is missed during the punch walk or not included on the "punch list" for any reason, it does not release the Contractor from completing the scope of work as defined in the specification or drawings.

C. Contractor shall submit complete Record Documentation as outlined in submittals section prior to project sign-off by OCFA.

3.12 SYSTEM AND/OR NETWORK TESTING

A. Upon completion of installation, Contractor shall execute all of the required tests as summarized in this specification. When all such tests have been completed to OCFA's satisfaction and Manufacturer's specifications, Contractor shall give the OCFA written notice thereof.

B. Contractor must assume responsibility of assuring that the system and network interface installed operates properly, including any required coordination with other suppliers.

3.13 FINAL ACCEPTANCE

A. The OCFA or OCFA's representative may visit the site during the installation of the system to ensure that correct installation practices are being followed.

B. The OCFA or OCFA's representative will conduct a final job review once the Contractor has finished the job. This review will take place within one week after the Contractor notifies the OCFA.

C. Two (2) copies of all certification data and drawings for all identifications shall be provided to the OCFA before the OCFA's review.

D. The OCFA or OCFA's representative will review the installation and certification data prior to the system acceptance.

E. The OCFA or OCFA's representative may test some of the systems features to ensure that the certification data is correct. If a substantial discrepancy is found, the OCFA reserves the right to have an independent consultant perform a certification of the entire system. If such a procedure is undertaken, the cost of the testing will be billed back to the Contractor.

F. In the event that repairs or adjustments are necessary, the Contractor shall make these repairs at his own expense. All repairs shall be completed within 5 days from the time they are discovered.

G. The Contractor shall hand to the OCFA a copy of any applicable installation specific software configurations in CD format.

END OF SECTION

WAV - OCFA - A/V Project Preliminary Schedule 11.8.16

ID	Task Name	Duration	Start	Finish
1	Revised/Final Contract Issued	1 day	Wed 11/9/16	Wed 11/9/16
2	Audio Visual Equipment Procurement	20 days	Fri 10/21/16	Thu 11/17/16
3	Classroom D106 D107 Audio Visual Installation	14 days	Mon 11/14/16	Fri 12/2/16
4	Boardroom Audio Visual Installation	28 days	Mon 12/5/16	Fri 1/13/17
5	AE117 Audio Visual Installation	5 days	Mon 12/12/16	Fri 12/16/16
6	Classroom 153 & 154 Audio Visual Installation	11 days	Fri 1/20/17	Fri 2/3/17
7	Final Punch List Items (All Areas)	5 days	Mon 2/6/17	Fri 2/10/17
8	Audio Visual Closeouts	10 days	Mon 2/13/17	Fri 2/24/17
9	Delivery of Audio Visual Closeouts	1 day	Mon 2/27/17	Mon 2/27/17
10	Project 100% Complete	1 day	Wed 3/1/17	Wed 3/1/17

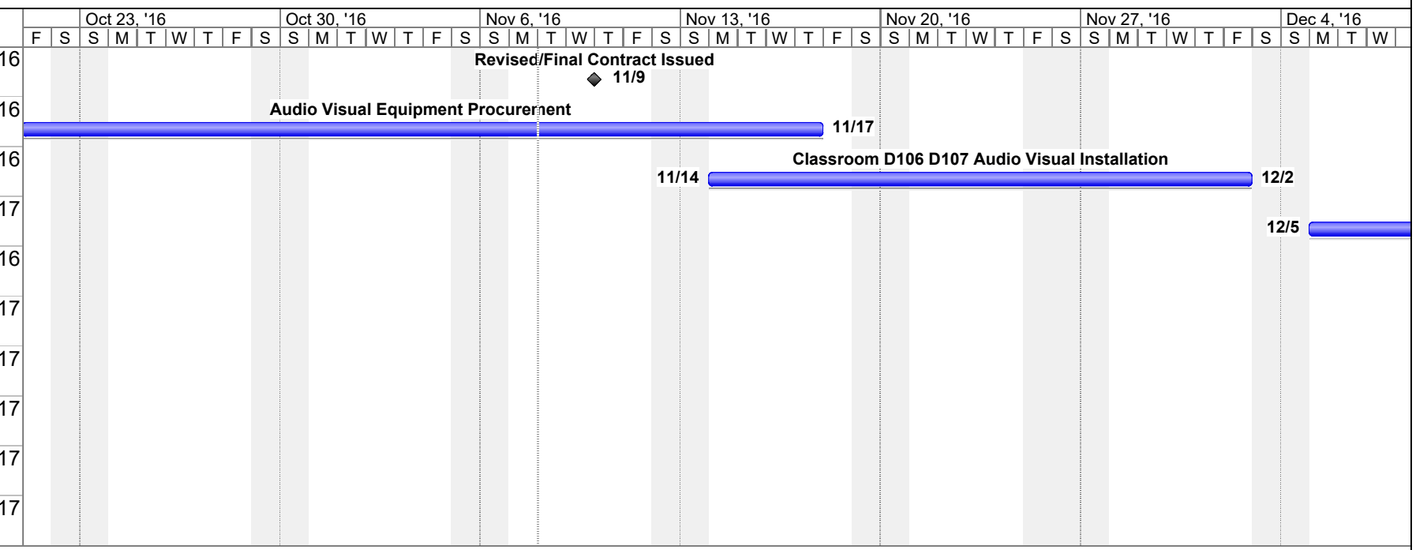

WAV - OCFA - A/V Project Preliminary Schedule 11.8.16

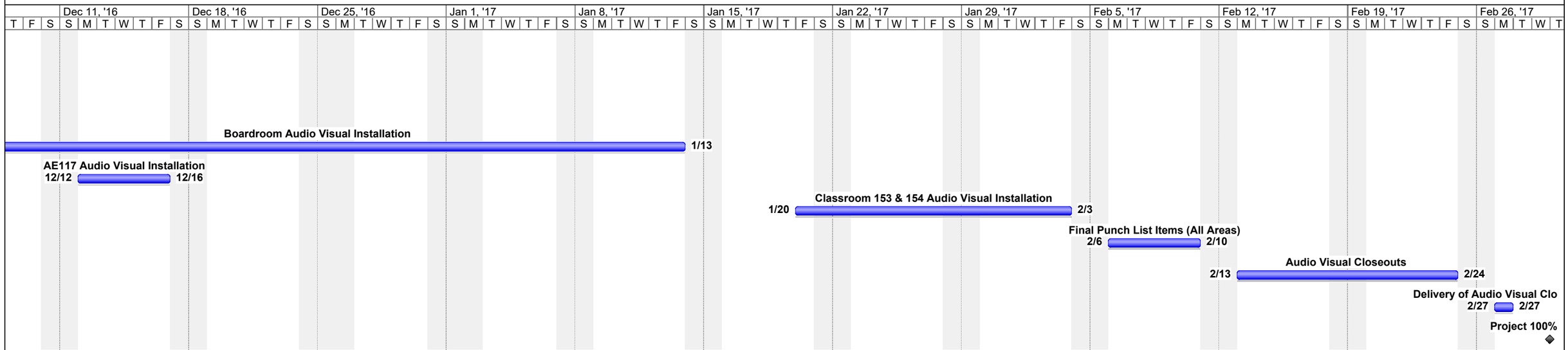

Attachment 4

Detailed Labor and Fee Breakdown

Orange County Fire Authority

RO2155 - Audio Visual Systems Upgrade - RFOTC

PLEASE VERIFY PROPER CALCULATION

LABOR RATES FEE SCHEDULE

PROJECT FEE BY TASK BY PERSONNEL				Classification: Sound Installer				Sound Installer				Classification: Sound Installer				Discipline 4 (Ex. Survey)											
	Task Description	Project Director/Point of Contact	Project Manager	Installation	Pull/Terminate Wire	Install Racks	Mic's	Set in Place	Test/Closing	Punchlist	De-install	Misc.	Title	Title	Title	Title	Title	Title	Title	QA/QC	Clerical / Administrative	TOTAL HOURS PRIME CONSULTANT	Hourly Rate	TOTAL FEE Sub Consultant 1 Discipline (Ex. Geotechnical)	TOTAL FEE Sub Consultant 2	TOTAL FEE Sub Consultant 3	TOTAL PROJECT FEE
	Burdened Hourly Rate	$ -	$ -	$ -	$ -	$ -	$ -	$ -	$ -	$ -	$ -	$ -	$ -	$ -	$ -	$ -	$ -	$ -	$ -	$ -	$ -						
	TOTAL ESTIMATED FEE FOR PREVAILING WAGE RELATED ACTIVITIES																						$ -	$ -	$ -	$ -	$ -
TASK 1: Boardroom AE107																											
Task 1.1	Installation			28	70	12	16	16	32	8	24	40										246	$ 96.00	$ -	$ -	$ -	$ 23,616.00
Task 1.2	Description																					0	$ -	$ -	$ -	$ -	$ -
Task 1.3	Description																					0	$ -	$ -	$ -	$ -	$ -
	SUBTOTAL	**0**	**0**	**28**	**70**	**12**	**16**	**16**	**32**	**8**	**24**	**40**	**0**	**0**	**0**	**0**	**0**	**0**	**0**	**0**	**0**	**246**	**$ 96.00**	**$ -**	**$ -**	**$ -**	**$ 23,616.00**
TASK 2: Breakout Room AE117																											
Task 2.1	Installation			3	24	4	2	4	8	2	6	10										63	$ 96.00	$ -	$ -	$ -	$ 6,048.00
Task 2.2	Description																					0	$ -	$ -	$ -	$ -	$ -
Task 2.3	Description																					0	$ -	$ -	$ -	$ -	$ -
	SUBTOTAL	**0**	**0**	**3**	**24**	**4**	**2**	**4**	**8**	**2**	**6**	**10**	**0**	**0**	**0**	**0**	**0**	**0**	**0**	**0**	**0**	**63**	**$ 96.00**	**$ -**	**$ -**	**$ -**	**$ 6,048.00**
TASK 3: Classrooms 153,154																											
Task 3.1	Installation			6	48	8	4	22	16	4	8	22										138	$ 96.00	$ -	$ -	$ -	$ 13,248.00
Task 3.2	Description																					0	$ -	$ -	$ -	$ -	$ -
Task 3.3	Description																					0	$ -	$ -	$ -	$ -	$ -
	SUBTOTAL	**0**	**0**	**6**	**48**	**8**	**4**	**22**	**16**	**4**	**8**	**22**	**0**	**0**	**0**	**0**	**0**	**0**	**0**	**0**	**0**	**138**	**$ 96.00**	**$ -**	**$ -**	**$ -**	**$ 13,248.00**
Task 4: Classrooms D106,D107																											
Task 4.1	Installation			6	48	8	4	22	16	4	8	22										138	$ 96.00	$ -	$ -	$ -	$ 13,248.00
Task 4.2																						0	$ -	$ -	$ -	$ -	$ -
Task 4.3																						0	$ -	$ -	$ -	$ -	$ -
	SUBTOTAL	**0**	**0**	**6**	**48**	**8**	**4**	**22**	**16**	**4**	**8**	**22**	**0**	**0**	**0**	**0**	**0**	**0**	**0**	**0**	**0**	**138**	**$ 96.00**	**$ -**	**$ -**	**$ -**	**$ 13,248.00**
TASK 5: DESCRIPTION																											
Task 5.1	Description																					0	$ -	$ -	$ -	$ -	$ -
Task 5.2	Description																					0	$ -	$ -	$ -	$ -	$ -
Task 5.3	Description																					0	$ -	$ -	$ -	$ -	$ -
	SUBTOTAL	**0**	**0**	**0**	**0**	**0**	**0**	**0**	**0**	**0**	**0**	**0**	**0**	**0**	**0**	**0**	**0**	**0**	**0**	**0**	**0**	**0**	**$ -**	**$ -**	**$ -**	**$ -**	**$ -**
	TOTAL LABOR FOR PREVAILING WAGE RELATED ACTIVITIES	**0**	**0**	**43**	**190**	**32**	**26**	**64**	**72**	**18**	**46**	**94**	**0**	**0**	**0**	**0**	**0**	**0**	**0**	**0**	**0**	**585**	**$ 96.00**	**$ -**	**$ -**	**$ -**	**$ 56,160.00**
Other Direct Costs																											
Task 1.	Description																						$ -	$ -	$ -	$ -	$ -
Task 2.	Description																						$ -	$ -	$ -	$ -	$ -
Task 3.	Description																						$ -	$ -	$ -	$ -	$ -
Task 4.	Description																						$ -	$ -	$ -	$ -	$ -
Task 5.	Description																						$ -	$ -	$ -	$ -	$ -
	SUBTOTAL																						**$ -**	**$ -**	**$ -**	**$ -**	**$ -**
	TOTAL ESTIMATED FEE FOR TRAINING, SUPPORT, AND OTHER NON-PREVAILING WAGE RELATED ACTIVITIES																						**$ -**	**$ -**	**$ -**	**$ -**	**$ -**
OPTIONAL ITEMS (IF ANY)																											
TASK 6: Engineering,Drafting, DSP Programming																											
Task 6.1	Engineering, Drafting, DSP Programming		98																			98	$ 149.00	$ -	$ -	$ -	$ 14,602.00
Task 6.2	Description																					0	$ -	$ -	$ -	$ -	$ -
Task 6.3	Description																					0	$ -	$ -	$ -	$ -	$ -
	SUBTOTAL	**0**	**98**	**0**	**0**	**0**	**0**	**0**	**0**	**0**	**0**	**0**	**0**	**0**	**0**	**0**	**0**	**0**	**0**	**0**	**0**	**98**	**$ 149.00**	**$ -**	**$ -**	**$ -**	**$ 14,602.00**
TASK 7: Programming, Project Management																											
Task 7.1	Progamming		82																			82	$ 289.00	$ -	$ -	$ -	$ 23,698.00
Task 7.2	Project Management		32																			32	$ 96.00	$ -	$ -	$ -	$ 3,072.00
Task 7.3	General & Administrative		n/a																			0	$ -	$ -	$ -	$ -	$ 4,032.69
	SUBTOTAL	**0**	**82**	**0**	**0**	**0**	**0**	**0**	**0**	**0**	**0**	**0**	**0**	**0**	**0**	**0**	**0**	**0**	**0**	**0**	**0**	**114**		**$ -**	**$ -**	**$ -**	**$ 30,802.69**
TASK 8: Training																											
Task 8.1	Training		34																			34	$ 96.00	$ -	$ -	$ -	$ 3,264.00
Task 8.2	Shop Assembly/Staging		14																			14	$ 96.00	$ -	$ -	$ -	$ 1,344.00
Task 8.3	Preventative Maintenance		64																			64	$ 96.00	$ -	$ -	$ -	$ 6,144.00
	SUBTOTAL	**0**	**48**	**0**	**0**	**0**	**0**	**0**	**0**	**0**	**0**	**0**	**0**	**0**	**0**	**0**	**0**	**0**	**0**	**0**	**0**	**48**		**$ -**	**$ -**	**$ -**	**$ 10,752.00**
	TOTAL LABOR FOR NON-PREVAILING WAGE RELATED ACTIVITIES	**0**	**228**	**0**	**0**	**0**	**0**	**0**	**0**	**0**	**0**	**0**	**0**	**0**	**0**	**0**	**0**	**0**	**0**	**0**	**0**	**260**		**$ -**	**$ -**	**$ -**	**$ 56,156.69**
Other Direct Costs (Optional)																											
Task 6.	Description																						$ -	$ -	$ -	$ -	$ -
Task 7.	Description																						$ -	$ -	$ -	$ -	$ -
Task 8.	Description																						$ -	$ -	$ -	$ -	$ -
	SUBTOTAL																						**$ -**	**$ -**	**$ -**	**$ -**	**$ -**
	TOTAL ESTIMATED FEE FOR TRAINING, SUPPORT, AND OTHER NON-PREVAILING WAGE RELATED ACTIVITIES																						**$ -**	**$ -**	**$ -**	**$ -**	**$ 56,156.69**
	TOTAL ESTIMATED LABOR FEES FOR PREVAILING WAGE AND NON-PREVAILING WAGE ACTIVITIES																						**$ -**	**$ -**	**$ -**	**$ -**	**$ 112,316.69**

Western Audio Visual

Project Pricing Summary

PROJECT NAME: Orange County Fire Authority

DATE: 9/12/2016

ROOM	EQUIPMENT	ENGINEERING, DRAFTING & DSP	PROGRAMMING	PROJECT MANAGEMENT	ASSEMBLY AND STAGING	AV INSTALL	TRAINING	PREVENTATIVE MAINTENANCE (1 YEAR)	G&A	ELECTRONIC WASTE RECYCLING FEE	SHIPPING AND HANDLING	BOND	PRE-TAX TOTAL	TAX	TOTAL
Boardroom AE107	$ 171,449.00	$ 6,258.00	$ 14,450.00	$ 960.00	$ 384.00	$ 23,616.00	$ 1,536.00	$ 2,304.00	$ 1,885.94	$ 100.00	$ 1,695.73		$ 224,638.67	$ 13,851.58	$ 238,490.24
Breakout Room Classroom AE117	$ 38,435.00	$ 2,384.00	$ 4,624.00	$ 576.00	$ 192.00	$ 6,048.00	$ 576.00	$ 768.00	$ 422.79	$ 10.00	$ 379.61		$ 54,415.39	$ 3,105.17	$ 57,520.56
Classrooms 153, 154	$ 80,192.00	$ 2,980.00	$ 2,312.00	$ 768.00	$ 384.00	$ 13,248.00	$ 576.00	$ 1,536.00	$ 882.11	$ 10.00	$ 792.13		$ 103,680.24	$ 6,478.73	$ 110,158.97
Classrooms D106, D107	$ 76,532.00	$ 2,980.00	$ 2,312.00	$ 768.00	$ 384.00	$ 13,248.00	$ 576.00	$ 1,536.00	$ 841.85	$ 10.00	$ 755.86		$ 99,943.71	$ 6,183.03	$ 106,126.74
Total	$ 366,608.00	$ 14,602.00	$ 23,698.00	$ 3,072.00	$ 1,344.00	$ 56,160.00	$ 3,264.00	$ 6,144.00	$ 4,032.69	$ 130.00	$ 3,623.32	$ 8,720.00	$ 482,678.01	$ 29,618.51	$ 512,296.52

Orange County Fire Authority

AGENDA STAFF REPORT

Board of Directors Meeting
November 17, 2016

Agenda Item No. 5E
Discussion Calendar

Request by Director Barnett: Pension Termination Liability Estimate, Pension Liability Data Extract, Pension Reform Committee, & Pre-Retirement Workers' Compensation Data

Contact(s) for Further Information

Rick Barnett, OCFA Director	rbarnett@villapark.org	714.958.1500
Lori Zeller, Assistant Chief (Presenter) Business Services Department	lorizeller@ocfa.org	714.573.6020

Summary

This agenda item is submitted in response to a request from Director Barnett (Villa Park) for the Board of Directors to discuss special actions he is requesting for OCFA staff, OCERS staff, and the Board of Directors to undertake.

Prior Board/Committee Action

At its September 22, 2016, meeting, the Board of Directors considered Director Barnett's recommendations (see Attachment) and voted to forward the topic to the Pension Reform Ad Hoc Committee for its review. Director Barnett voted in opposition for lack of consideration of the independent study on pension liability.

At the October 27, 2016, Board meeting, Director Barnett requested this item be scheduled for reconsideration by the Board. Chair Hernandez reminded Director Barnett of the Board's prior action to forward the recommended actions to the Ad Hoc Committee, and announced that the Ad Hoc Committee had been formed and would be meeting just prior to the November 17, 2016, Board meeting. Chair Hernandez noted that he could provide a status of the Ad Hoc Committee at the November Board meeting.

RECOMMENDED ACTION(S)

1. Reaffirm Board's prior September 22, 2016, direction to forward the topic to the Pension Reform Ad Hoc Committee for its review.
2. Receive oral status report from the Pension Reform Ad Hoc Committee Chair.

Impact to Cities/County

Not Applicable.

Fiscal Impact

Not Applicable.

Background

This agenda item is resubmitted in response to a subsequent request from Director Barnett (Villa Park) for the Board of Directors to discuss and vote on actions he is requesting for OCFA staff, OCERS staff, and the Board of Directors to undertake (see Attachment).

Attachment(s)

September 22, 2016, Agenda Item No. 5 entitled *Request by Director Barnett: Pension Termination Liability Estimate, Pension Liability Data Extract, Pension Reform Committee, & Pre-Retirement Workers' Compensation Data* (Staff Report's Attachments are on file in the Office of the Clerk and available on the OCFA's website at: http://ocfastorage.azurewebsites.net/Uploads/BoardAgendaAndMinutes/2016/Board/sr_bd160922-05b.pdf

Orange County Fire Authority

AGENDA STAFF REPORT

Board of Directors Meeting
September 22, 2016

Agenda Item No. 5B
Discussion Calendar

Request by Director Barnett: Pension Termination Liability Estimate, Pension Liability Data Extract, Pension Reform Committee, & Pre-Retirement Workers' Compensation Data

Contact(s) for Further Information

Rick Barnett, OCFA Director	rbarnett@villapark.org	714.958.1500
Lori Zeller, Assistant Chief Business Services Department	lorizeller@ocfa.org	714.573.6020

Summary

This agenda item is submitted in response to a request from Director Barnett (Villa Park) for the Board of Directors to discuss special actions he is requesting for OCFA staff, OCERS staff, and the Board of Directors to undertake.

Prior Board/Committee Action

A related request from Director Barnett regarding pension liabilities was previously considered by the Executive Committee in January 2015 (Attachment 1), and the Human Resources Committee in February 2015 (Attachment 2). A response from the Human Resources Committee was provided to Director Barnett on February 5, 2015 (Attachment 3).

RECOMMENDED ACTION(S)

Vote individually on each of the following requests from Director Barnett:

1. Request OCERS to calculate the estimated "pension termination liability" that OCERS would accrue or bill to OCFA if OCFA terminated future enrollment in OCERS.
2. Request OCERS to program an OCFA individualized actuarial data extract report from its information system for provision of data to an external party coordinated by Director Barnett.
3. Consider establishing an OCFA Pension Reform Ad Hoc Committee.
4. Direct OCFA staff to analyze and prepare a special report summarizing how many workers' compensation claims were filed within one year before the claimant's retirement date, with the special report to analyze three years of historical data.

Impact to Cities/County

Not Applicable.

Fiscal Impact

Not Applicable.

Background

This agenda item is submitted in response to a request from Director Barnett (Villa Park) for the Board of Directors to discuss and vote on actions he is requesting for OCFA staff, OCERS staff, and the Board of Directors to undertake. Each request is briefly described below:

OCFA staff routinely prepares a Workers' Compensation Report each year for review with the Human Resources Committee (HRC) and the Board of Directors. This report is scheduled for review at the October 4 meeting of the HRC and the October 27 meeting of the Board. Staff will be glad to include this requested three-year analysis as part of the WC Report in October.

Since this special report under discussion is combining two topics, WC claims and retirement, it is likely that a subsequent area of question may arise as to how many of the retirements were disability retirements. It is important to point out that WC claims management is handled by OCFA completely separate from the approval of disability retirements, which is governed by OCERS. OCERS produces routine reports summarizing Disability Retirement Statistics, with the most recent report provided as Attachment 5.

Attachment(s)

1. Executive Committee Agenda Item re: Director Request for Preparation of Pension Report dated January 15, 2015
2. Human Resources Committee Agenda Item re: Director Request for Preparation of Pension Report dated February 3, 2015
3. Letter Response from HRC Chairman Shawver to Director Barnett dated February 5, 2015
4. County of Orange Board of Supervisors Agenda Item re: Orange County Employees Retirement System dated June 6, 2006
5. OCERS Agenda Item re: 2015 Disability Retirement Statistics dated January 4, 2016